INDICE

1. **VALVOLE DI INTERCETTAZIONE**
   - 1.1 Valvola a globo a via diritta VD (anche attuata)
   - 1.2 Valvola a globo ad angolo retto AR (anche attuata)
   - 1.3 Valvola a raccordo ogiva
   - 1.4 Valvola a soffietto
   - 1.5 Valvola a flusso libero
   - 1.6 Valvola a spillo
   - 1.7 Valvola a globo a via diritta VD ANSI
2. **VALVOLE ATTACCO TUBO FLESSIBILE ANTINCENDIO**
3. **VALVOLE A MEMBRANA**
4. **VALVOLE A RAPIDA CHIUSURA E ACCESSORI**
5. **SARACINESCHE**
   - 5.1 Saracinesca
   - 5.2 Saracinesca serie ANSI
6. **VALVOLE SCARICO FUORI BORDO**
7. **VALVOLE PRESA A MARE KINGSTON**
8. **FILTRI E CASSE FANGO**
   - 8.1 Autofiltro
   - 8.2 Cassa fango e filtro a cestello
   - 8.3 Filtro a Y
9. **PIGNE, VALVOLE DI FONDO E DI PIEDE**
   - 9.1 Pigna
   - 9.2 Valvola di fondo - di piede
10. **VALVOLE DI RITEGNO, RITEGNO BATTENTE E A DISCO**
    - 10.1 Valvola di ritegno
    - 10.2 Valvola ritengo battente
    - 10.3 Valvola ritegno battente wafer
11. **VALVOLE A SFERA**
    - 11.1 Valvola a sfera flangiata (anche attuata)
    - 11.2 Valvola a sfera wafer (anche attuata)
    - 11.3 Valvola a sfera filettata (anche attuata)
    - 11.4 Valvola a sfera a 3 vie (anche attuata)
12. **VALVOLE A FARFALLA**
    - 12.1 Valvola a farfalla wafer (anche attuata)
    - 12.2 Valvola a farfalla LUG (anche attuata)
    - 12.3 Valvola a farfalla a doppia flangia
    - 12.4 Valvola a farfalla a doppio eccentrico
13. **VALVOLE DI SICUREZZA E REGOLAZIONE**
14. **RUBINETTI**
    - 14.1 Rubinetti
    - 14.2 Rubinetti e valvole decantazione e pulsante
15. **EIETTORI**
16. **CASSE VALVOLA**
17. **SPIE DI CONTROLLO**
18. **INDICATORI DI LIVELLO**
19. **OMBRINALI**
20. **POMPE A MANO**
21. **SFOGHI ARIA**
22. **VALVOLE DI SEGREGAZIONE DI LINEA**
23. **VALVOLE DI SOFFIAMENTO**
24. **RACCORDI, RIDUZIONI, BOCCOLE E TAPPI**
25. **ATTUATORI IDRAULICI**
    - 25.1 Attuatore idraulico lineare
    - 25.2 Attuatore idraulico rotante a semplice effetto ARS-RS
    - 25.3 Attuatore idraulico rotante a doppio effetto ARL-RL
26. **NORMATIVE FLANGE**

INDEX

1. **GLOBE VALVES**
   - 1.1 Globe valve straight type (also actuated)
   - 1.2 Globe valve angle type (also actuated)
   - 1.3 Stop valve
   - 1.4 Bellows valve
   - 1.5 Straight stop free flow valve
   - 1.6 Needle valve
   - 1.7 Globe valve straight type ANSI series
2. **STOP VALVES WITH CONNECTION FOR FIRE HOSE**
3. **MEMBRANE (DIAPHRAGM) VALVES**
4. **QUICK CLOSING VALVES AND ACCESSORIES**
5. **GATE VALVES**
   - 5.1 Gate valve
   - 5.2 Gate valve ANSI type
6. **STORM VALVES**
7. **SEA SUCTION VALVES KINGSTON TYPE**
8. **STRAINERS AND MUD BOXES**
   - 8.1 Autofilter
   - 8.2 Mud box and naval strainer
   - 8.3 Y strainer
9. **SUCTION AND FOOT VALVES**
   - 9.1 Suction valve
   - 9.2 Foot valve
10. **NO RETURN CHECK VALVES, SWING CHECK VALVES AND CHECK VALVES**
    - 10.1 Check valve
    - 10.2 Swing check valve
    - 10.3 Swing check valve wafer type
11. **BALL VALVES**
    - 11.1 Flanged ball valve (also actuated)
    - 11.2 Ball valve wafer type (also actuated)
    - 11.3 Threaded ball valve (also actuated)
    - 11.4 Three way ball valve (also actuated)
12. **BUTTERFLY VALVES**
    - 12.1 Butterfly valve wafer type (also actuated)
    - 12.2 Butterfly valve lug type (also actuated)
    - 12.3 Double flanged butterfly valve
    - 12.4 Double eccentric butterfly valve
13. **SAFETY AND REGULATING VALVES**
14. **COCKS**
    - 14.1 Cocks
    - 14.2 Cocks and push and decantation button cocks
15. **EJECTORS**
16. **DISTRIBUTION BOXES**
17. **SIGHT GLASSES**
18. **LEVEL GAUGES**
19. **SCUPPERS**
20. **HAND PUMPS**
21. **THANK VENT CHECK VALVES**
22. **LINE BLIND VALVES**
23. **SEA SUCTION BLOWING VALVES**
24. **FLANGED CONNECTIONS, ADAPTERS, BUSHINGS AND PLUGS**
25. **HYDRAULIC ACTUATORS**
    - 25.1 Linear hydraulic actuator
    - 25.2 Rotary hydraulic actuator single acting ARS-RS
    - 25.3 Rotary hydrauilc actuator double acting ARL-RL
26. **FLANGES NORMATIVES**

CERTIFICAZIONI
CERTIFICATIONS

www.medanaevisca.it

www.medanaevisca.it

Valvole a via diritta PN10M.M.I. - serie leggera Marina Militare Italiana

Globe valves straight type NP10M.M.I. - light class Italian Navy

Tab.110A

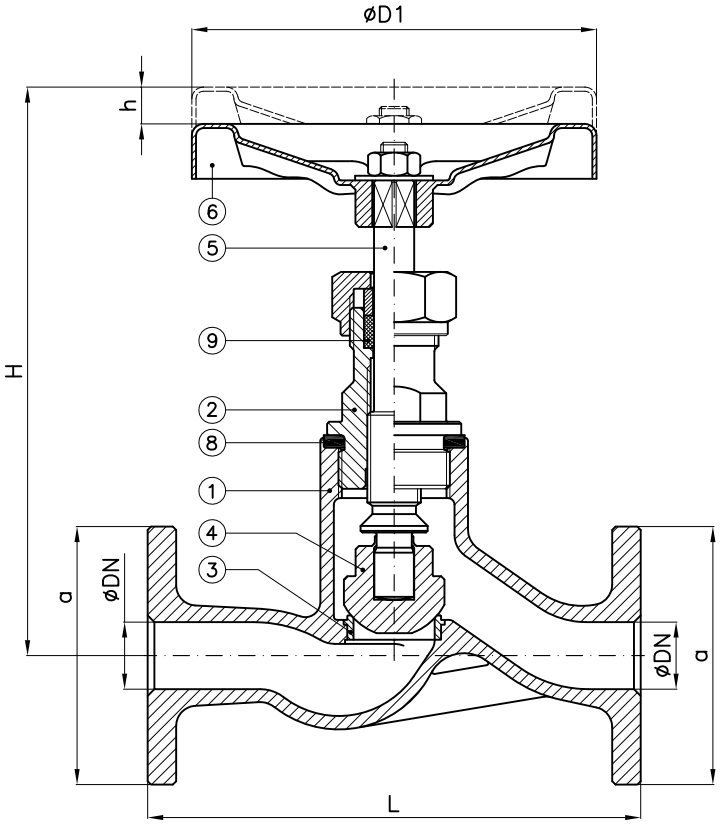

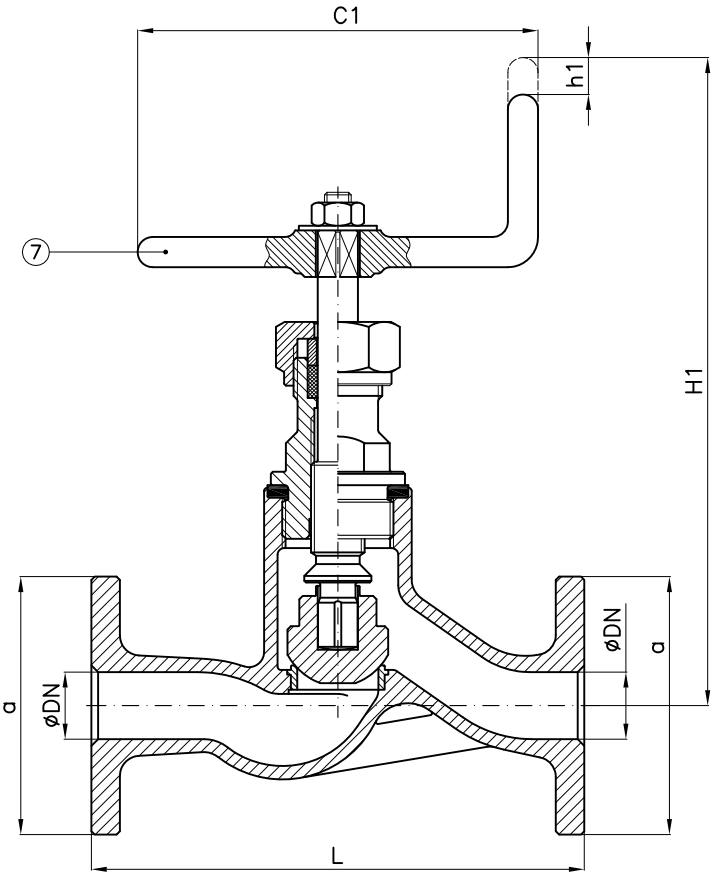

Tab.110AV-SDSL	PN10M.M.I.
comandata (SDSL) with fixed disc (SDSL)	UNI 2444 UNAV 8384-9326

Tab.110AV-SDNR	PN10M.M.I.
semiautomatica (SDNR) with loose disc (SDNR)	UNI 2446 UNAV 8385-9330

DN	a	C1	D1	H SDSL (~)	h SDSL	H1 SDNR (~)	h1 SDNR	L	D	K	f	Holes NO. f	Weight (Kg)
15	72	100	100	165	10	195	10	120	90	65	14	4	2.2
20	72	100	100	165	8	195	8	120	90	65	14	4	2.2
25	78	100	100	170	10	200	10	130	95	70	14	4	2.6
32	82	125	125	195	14	230	14	140	100	75	14	4	3.2

Combinazione materiali standard – Standard materials Combination			
		A/316	CF8M/316
ITEM	DENOMINAZIONE DENOMINATION	MATERIALE MATERIAL	MATERIALE MATERIAL
01	Body	Cast steel GP240-GH UNI EN10213	Stainless steel CF8M ASTM A351
02	Bonnet	Carbon steel GE240 UNI EN10293	Stainless steel AISI316 UNI EN10088
03	Body seat	Stainless steel AISI316 UNI EN10088	Stainless steel AISI316 UNI EN10088
04	Disc	Stainless steel AISI316 UNI EN10088	Stainless steel AISI316 UNI EN10088
05	Stem	Stainless steel AISI316 UNI EN10088	Stainless steel AISI316 UNI EN10088
06	Handwheel	Sheet of carbon steel	Sheet of carbon steel
07	Handle	Steel A37 UNI EN10217-1	Steel A37 UNI EN10217-1
08	Gasket	Planiflex KG carbo/C PF81	Planiflex KG carbo/C PF81
09	Packing	Carbograph GR8800	Carbograph GR8800
Nota: Combinazioni materiali non standard a richiesta Note: Non standard materials combinations on request			

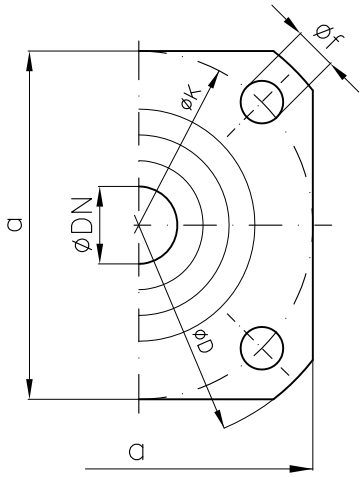

Valvole a via diritta PN10M.M.I. - serie leggera Marina Militare Italiana

Globe valves straight type NP10M.M.I. - light class Italian Navy

Tab.110B

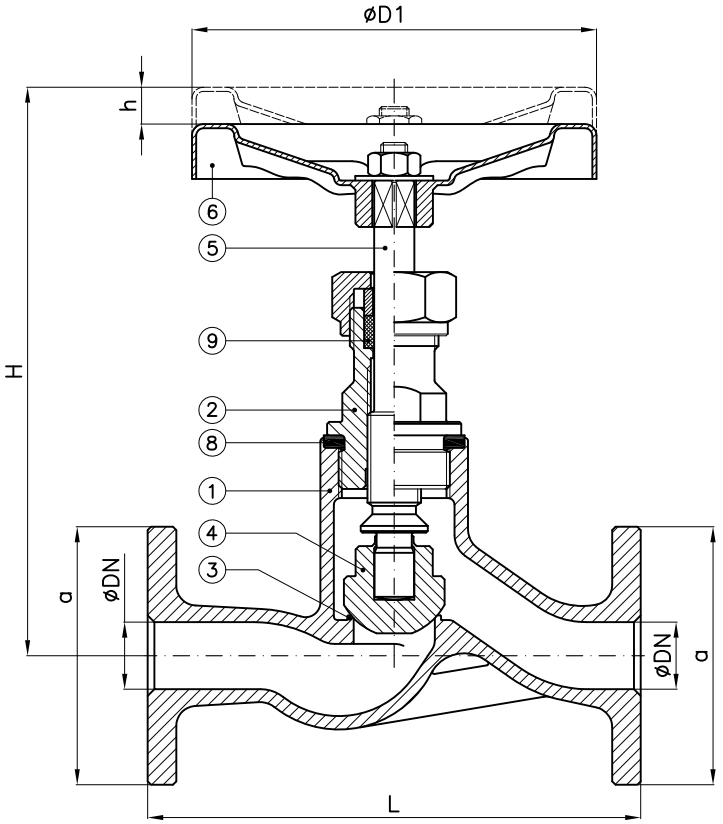

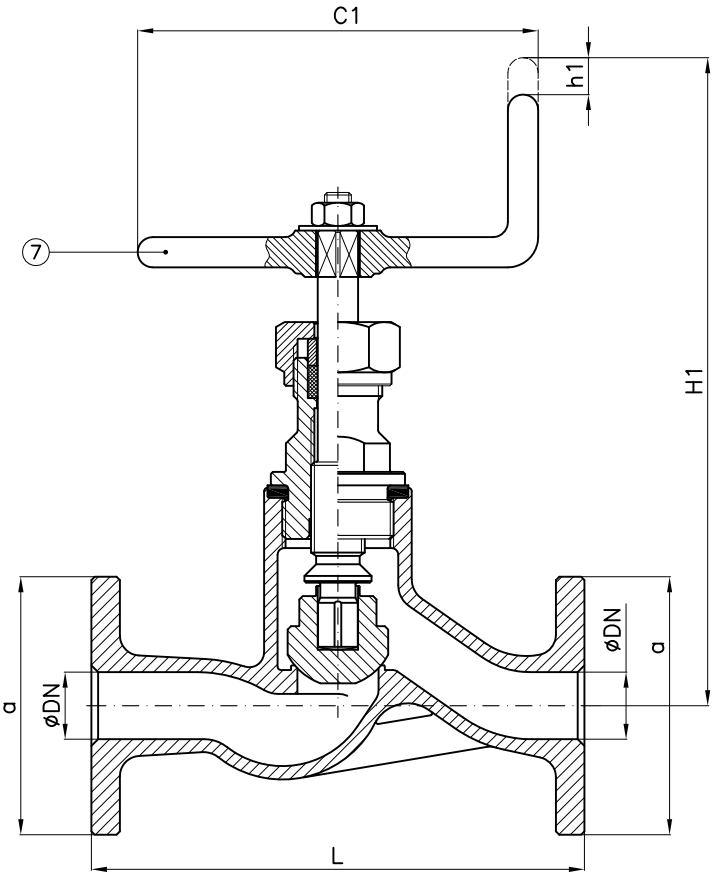

Tab.110.1B PN10M.M.I.	
comandata (SDSL) with fixed disc (SDSL)	UNI 2444 UNAV 9338-9346

Tab.110.2B PN10M.M.I.	
semiautomatica (SDNR) with loose disc (SDNR)	UNI 2446 UNAV 9342-9358

DN	a	C1	D1	H SDSL (~)	h SDSL	H1 SDNR (~)	h1 SDNR	L	D	K	f	Holes NO. f	Weight (Kg)
15	72	100	100	165	10	195	10	120	90	65	14	4	2.6
20	72	100	100	165	8	195	8	120	90	65	14	4	2.6
25	78	100	100	170	10	200	10	130	95	70	14	4	2.9
32	82	125	125	195	14	230	14	140	100	75	14	4	3.6

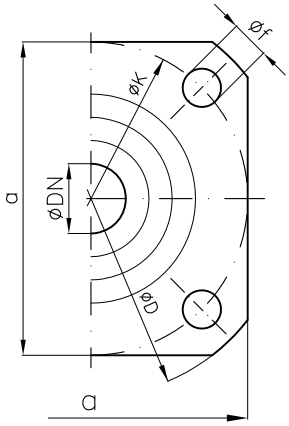

Combinazione materiali standard – Standard materials Combination					
		B/316	B/B	N/316	N/M
ITEM	DENOMINAZIONE DENOMINATION	MATERIALE MATERIAL	MATERIALE MATERIAL	MATERIALE MATERIAL	MATERIALE MATERIAL
01	Body	Bronze UNI EN1982 G-CuSn5Zn5Pb5	Bronze UNI EN1982 G-CuSn5Zn5Pb5	Bronze UNI EN1982 G-CuSn10Zn2Ni2	Bronze UNI EN1982 G-CuSn10Zn2Ni2
02	Bonnet	Bronze UNI EN1982 G-CuSn5Zn5Pb5	Bronze UNI EN1982 G-CuSn5Zn5Pb5	Bronze UNI EN1982 G-CuSn10Zn2Ni2	Bronze UNI EN1982 G-CuSn10Zn2Ni2
03	Integral body seat	Bronze UNI EN1982 G-CuSn5Zn5Pb5	Bronze UNI EN1982 G-CuSn5Zn5Pb5	Bronze UNI EN1982 G-CuSn10Zn2Ni2	Bronze UNI EN1982 G-CuSn10Zn2Ni2
04	Disc	Stainless steel AISI316 UNI EN10088	Bronze UNI EN1982 G-CuSn5Zn5Pb5	Stainless steel AISI316 UNI EN10088	Monel K500 BS 3076 NA18 (2.4375)
05	Stem	Stainless steel AISI316 UNI EN10088	Brass CW617N (OT58)	Stainless steel AISI316 UNI EN10088	Monel K500 BS 3076 NA18 (2.4375)
06	Handwheel	Sheet of carbon steel	Sheet of carbon steel	Sheet of carbon steel	Sheet of carbon steel
07	Handle	Steel A37 UNI EN10217-1	Steel A37 UNI EN10217-1	Steel A37 UNI EN10217-1	Steel A37 UNI EN10217-1
08	Gasket	Planiflex KG carbo/C PF81	Planiflex KG carbo/C PF81	Planiflex KG carbo/C PF81	Planiflex KG carbo/C PF81
09	Packing	Carbograph GR8800	Carbograph GR8800	Carbograph GR8800	Carbograph GR8800

Nota: Combinazioni materiali non standard a richiesta
Note: Non standard materials combinations on request

Valvole a via diritta PN10M.M.I. - serie leggera Marina Militare Italiana

Globe valves straight type NP10M.M.I. - light class Italian Navy

Tab.112A

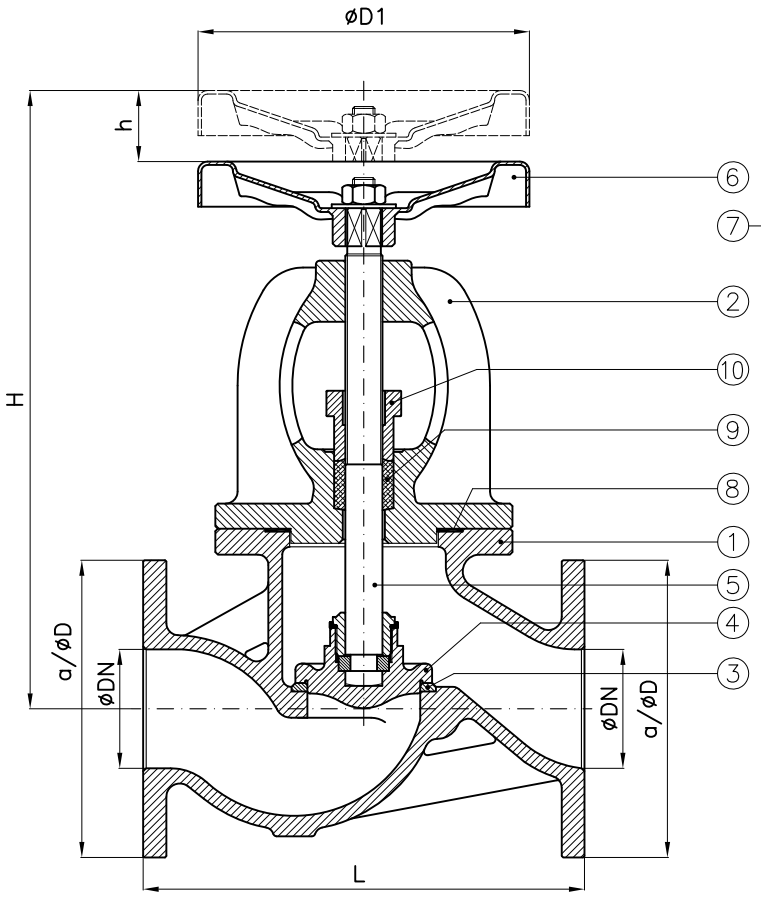

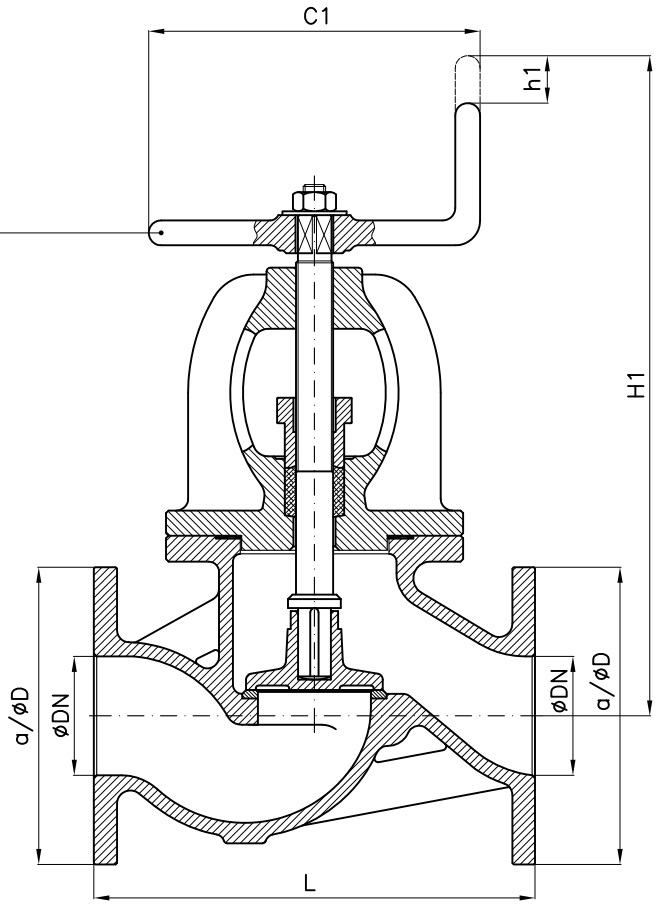

Tab.112.1A PN10M.M.I.	
comandata (SDSL) with fixed disc (SDSL)	UNAV 9326–9327

Tab.112.2A PN10M.M.I.	
semiautomatica (SDNR) with loose disc (SDNR)	UNAV 9330–9331

Flangia quadra
Square flange

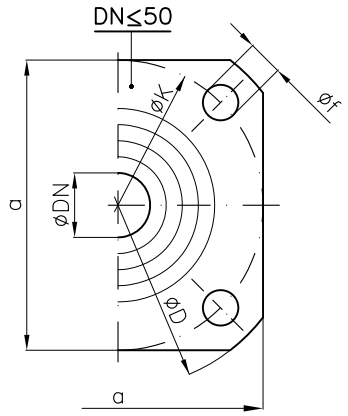

Flangia tonda
Round flange

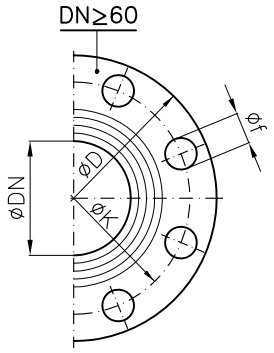

DN	a	C1	D1	H SDSL (~)	h SDSL	H1 SDNR (~)	h1 SDNR	L	D	K	f	Holes NO. f	Weight (Kg)
40	85	125	125	260	22	285	14	180	110	85	14	4	6.6
50	95	125	125	270	25	295	16	210	120	95	14	4	8.2
60	–	175	175	290	28	315	16	230	135	110	14	6	14
65/70	–	175	175	330	30	350	18	260	140	115	14	6	15
80	–	175	175	345	37	365	23	280	155	130	14	8	17.5
90	–	200	200	350	38	390	24	310	170	145	14	8	23
100	–	200	200	405	55	415	28	330	175	150	14	8	25
125	–	225	225	440	60	460	32	390	200	175	14	12	37.5
150	–	225	300	480	65	500	40	450	230	205	14	12	52
175	–	250	400	530	74	580	45	530	270	240	18	12	65
200	–	250	400	560	82	610	50	580	295	265	18	12	85

Combinazione materiali standard – Standard materials Combination			
		A/316	CF8M/316
ITEM	DENOMINAZIONE DENOMINATION	MATERIALE MATERIAL	MATERIALE MATERIAL
01	Body	Cast steel GP240–GH UNI EN10213	Stainless steel CF8M ASTM A351
02	Bonnet	Cast steel GP240–GH UNI EN10213	Stainless steel CF8M ASTM A351
03	Body seat	Stainless steel AISI316 UNI EN10088	Stainless steel AISI316 UNI EN10088
04	Disc (≤ DN80)	Stainless steel AISI316 UNI EN10088	Stainless steel AISI316 UNI EN10088
04	Disc (≥ DN100)	Cast steel GP240–GH UNI EN10213 plus AISI316 facing welding	Stainless steel CF8M ASTM A351
05	Stem	Stainless steel AISI316 UNI EN10088	Stainless steel AISI316 UNI EN10088
06	Handwheel	Sheet of carbon steel	Sheet of carbon steel
07	Handle	Steel A37 UNI EN10217–1	Steel A37 UNI EN10217–1
08	Gasket	Planiflex KG carbo/C PF81	Planiflex KG carbo/C PF81
09	Packing	Carbograph GR8800	Carbograph GR8800
10	Gland bushing	Steel Fe360B (S235JRC) UNI EN10025	Stainless steel AISI316 UNI EN10088

Nota: Combinazioni materiali non standard a richiesta
Note: Non standard materials combinations on request

Valvole a via diritta PN10M.M.I. - serie leggera Marina Militare Italiana

Globe valves straight type NP10M.M.I. - light class Italian Navy

Tab.112B

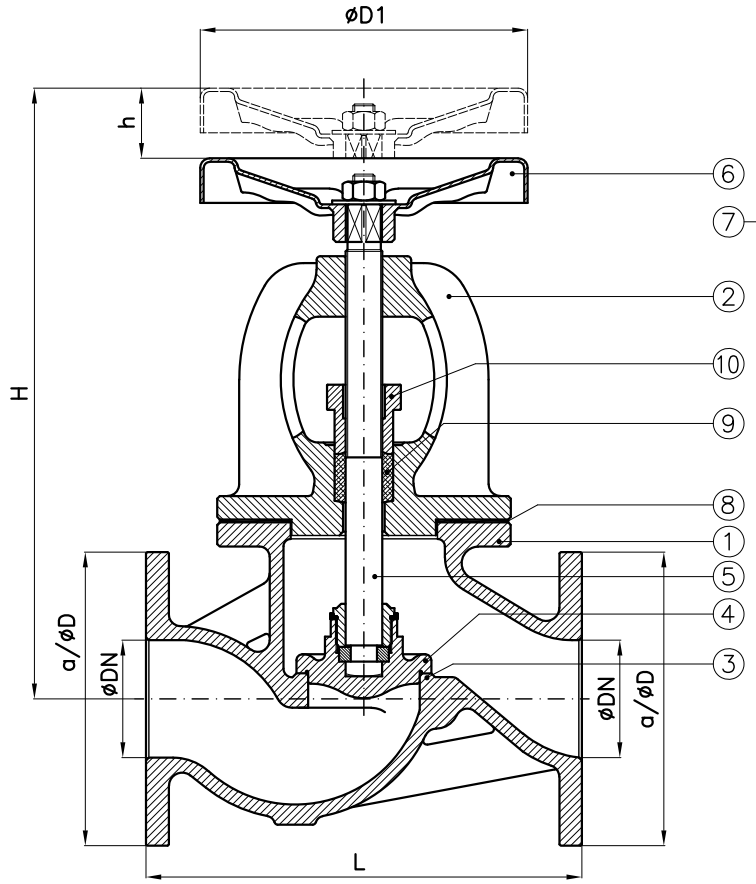

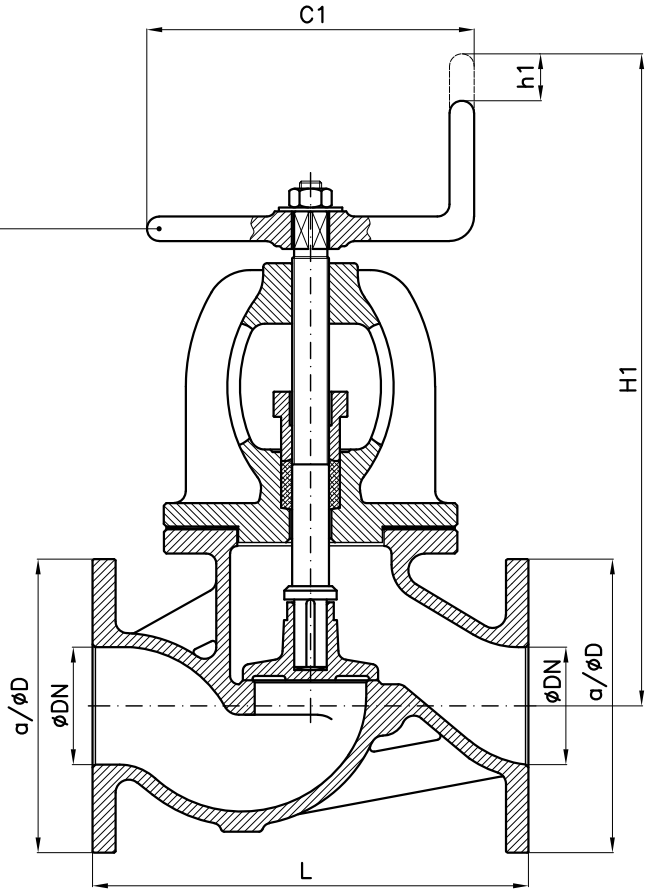

Tab.112.1B PN10M.M.I.		
comandata (SDSL) with fixed disc (SDSL)	UNI 2445	UNAV 8302-9338 UNAV 9339-9346 UNAV 9347

Tab.112.2B PN10M.M.I.		
semiautomatica (SDNR) with loose disc (SDNR)	UNI 2447	UNAV 8333-9342 UNAV 9343-9358 UNAV 9359

DN	a	C1	D1	H SDSL (~)	h SDSL	H1 SDNR (~)	h1 SDNR	L	D	K	f	Holes NO. f	Weight (Kg)
40	85	125	125	260	22	285	14	180	110	85	14	4	7
50	95	125	125	270	25	295	16	210	120	95	14	4	9.5
60	–	175	175	290	28	315	16	230	135	110	14	6	15
65/70	–	175	175	330	30	350	18	260	140	115	14	6	16
80	–	175	175	345	37	365	23	280	155	130	14	8	19.2
90	–	200	200	350	38	390	24	310	170	145	14	8	23
100	–	200	200	405	55	415	28	330	175	150	14	8	25
125	–	225	225	440	60	460	32	390	200	175	14	12	39
150	–	225	300	480	65	500	40	450	230	205	14	12	54
175	–	250	400	530	74	580	45	530	270	240	18	12	65
200	–	250	400	560	82	610	50	580	295	265	18	12	85

Flangia quadra

Square flange

DN≤50

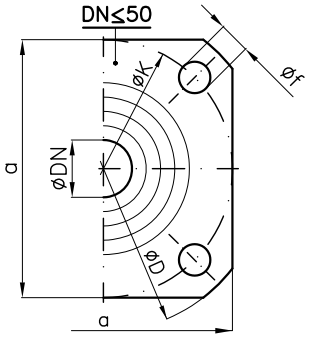

Flangia tonda

Round flange

DN≥60

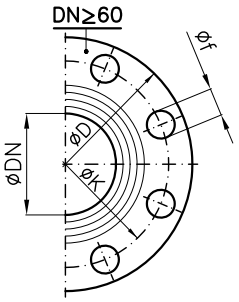

Combinazione materiali standard – Standard materials Combination					
		B/316	B/B	N/316	N/M
ITEM	DENOMINAZIONE DENOMINATION	MATERIALE MATERIAL	MATERIALE MATERIAL	MATERIALE MATERIAL	MATERIALE MATERIAL
01	Body	Bronze UNI EN1982 G-CuSn5Zn5Pb5	Bronze UNI EN1982 G-CuSn5Zn5Pb5	Bronze UNI EN1982 G-CuSn10Zn2Ni2	Bronze UNI EN1982 G-CuSn10Zn2Ni2
02	Bonnet	Bronze UNI EN1982 G-CuSn5Zn5Pb5	Bronze UNI EN1982 G-CuSn5Zn5Pb5	Bronze UNI EN1982 G-CuSn10Zn2Ni2	Bronze UNI EN1982 G-CuSn10Zn2Ni2
03	Integral body seat	Bronze UNI EN1982 G-CuSn5Zn5Pb5	Bronze UNI EN1982 G-CuSn5Zn5Pb5	Bronze UNI EN1982 G-CuSn10Zn2Ni2	Bronze UNI EN1982 G-CuSn10Zn2Ni2
04	Disc	Stainless steel AISI316 UNI EN10088	Bronze UNI EN1982 G-CuSn5Zn5Pb5	Stainless steel AISI316 UNI EN10088	Monel K500 BS 3076 NA18 (2.4375)
05	Stem	Stainless steel AISI316 UNI EN10088	Brass CW617N (OT58)	Stainless steel AISI316 UNI EN10088	Monel K500 BS 3076 NA18 (2.4375)
06	Handwheel	Sheet of carbon steel	Sheet of carbon steel	Sheet of carbon steel	Sheet of carbon steel
07	Handle	Steel A37 UNI EN10217-1	Steel A37 UNI EN10217-1	Steel A37 UNI EN10217-1	Steel A37 UNI EN10217-1
08	Gasket	EPDM	EPDM	EPDM	EPDM
09	Packing	Carbograph GR8800	Carbograph GR8800	Carbograph GR8800	Carbograph GR8800
10	Gland bushing	Brass CW509L (OT60)	Brass CW509L (OT60)	Brass CW509L (OT60)	Brass CW509L (OT60)

Nota: Combinazioni materiali non standard a richiesta
Note: Non standard materials combinations on request

Valvole a via diritta - serie pesante PN6
Globe valves straight type - heavy class NP6

Tab.120A

Conform to:
UNI EN1092
DIN 3202

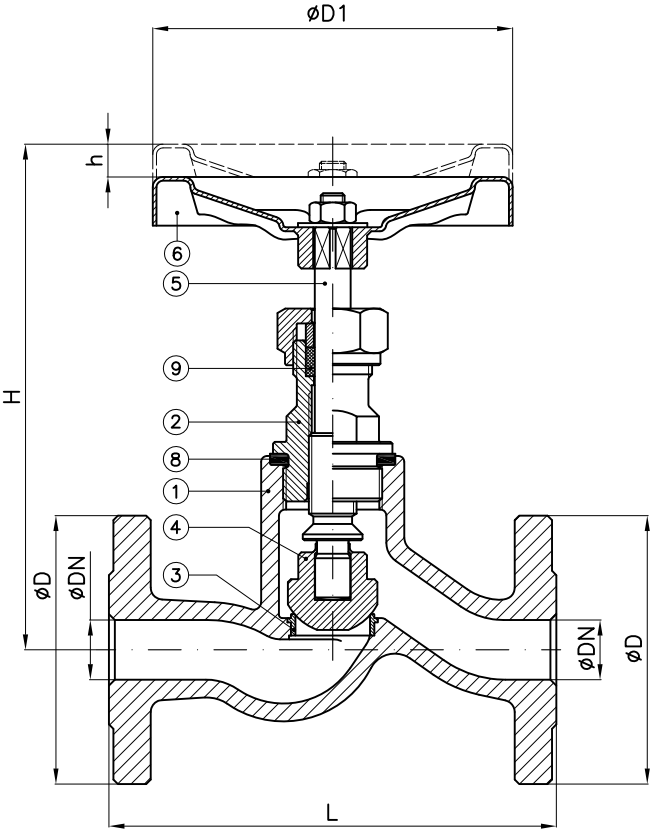

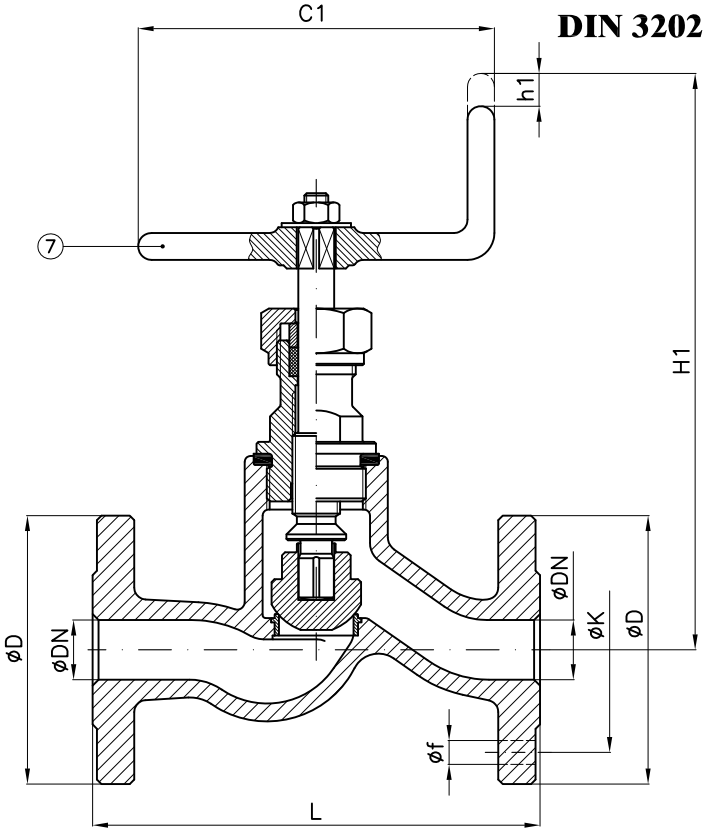

Tab.120.1A PN6	
comandata (SDSL) with fixed disc (SDSL)	UNAV 9826

Tab.120.2A PN6	
semiautomatica (SDNR) with loose disc (SDNR)	UNAV 9829

DN	C1	D1	H SDSL (~)	h SDSL	H1 SDNR (~)	h1 SDNR	L	D	K	f	Holes NO. f	Weight (Kg)
15	100	100	180	10	210	10	150	80	55	11	4	2
20	100	100	180	10	210	10	150	90	65	11	4	2.3
25	100	100	180	10	210	10	160	100	75	11	4	3
32	125	125	210	13	240	13	180	120	90	14	4	5

Combinazione materiali standard – Standard materials Combination				
		A/316	A/B	CF8M/316
ITEM	DENOMINAZIONE DENOMINATION	MATERIALE MATERIAL	MATERIALE MATERIAL	MATERIALE MATERIAL
01	Body	Cast steel GP240-GH UNI EN10213	Cast steel GP240-GH UNI EN10213	Stainless steel CF8M ASTM A351
02	Bonnet	Carbon steel GE240 UNI EN10293	Carbon steel GE240 UNI EN10293	Stainless steel AISI316 UNI EN10088
03	Body seat	Stainless steel AISI316 UNI EN10088	Stainless steel AISI316 UNI EN10088	Stainless steel AISI316 UNI EN10088
04	Disc	Stainless steel AISI316 UNI EN10088	Bronze UNI EN1982 G-CuSn5Zn5Pb5	Stainless steel AISI316 UNI EN10088
05	Stem	Stainless steel AISI316 UNI EN10088	Brass CW617N (OT58)	Stainless steel AISI316 UNI EN10088
06	Handwheel	Sheet of carbon steel	Sheet of carbon steel	Sheet of carbon steel
07	Handle	Steel A37 UNI EN10217-1	Steel A37 UNI EN10217-1	Steel A37 UNI EN10217-1
08	Gasket	Planiflex KG carbo/C PF81	Planiflex KG carbo/C PF81	Planiflex KG carbo/C PF81
09	Packing	Carbograph GR8800	Carbograph GR8800	Carbograph GR8800
Nota: Combinazioni materiali non standard a richiesta Note: Non standard materials combinations on request				

Valvole a via diritta - serie pesante PN6
Globe valves straight type - heavy class NP6

Tab.120B

Conform to:
UNI EN1092
DIN 3202

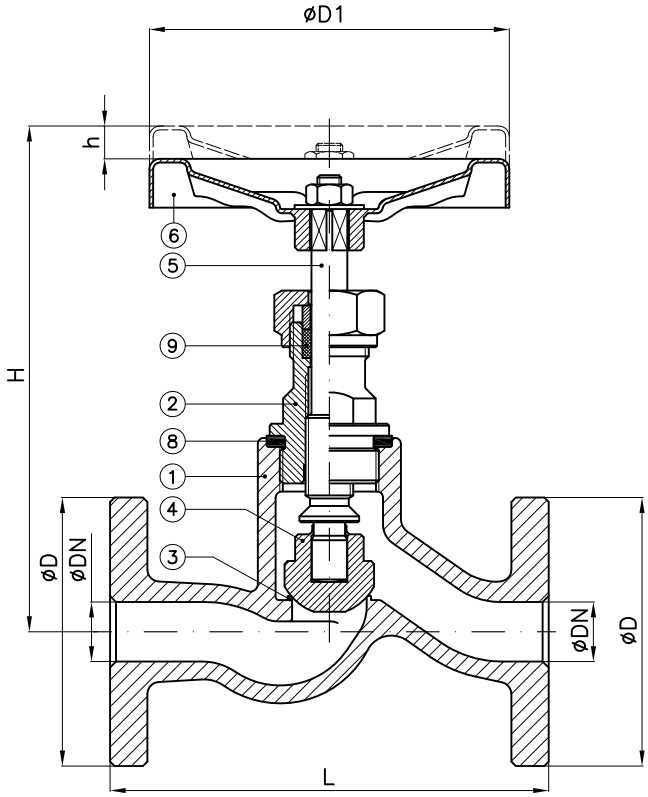

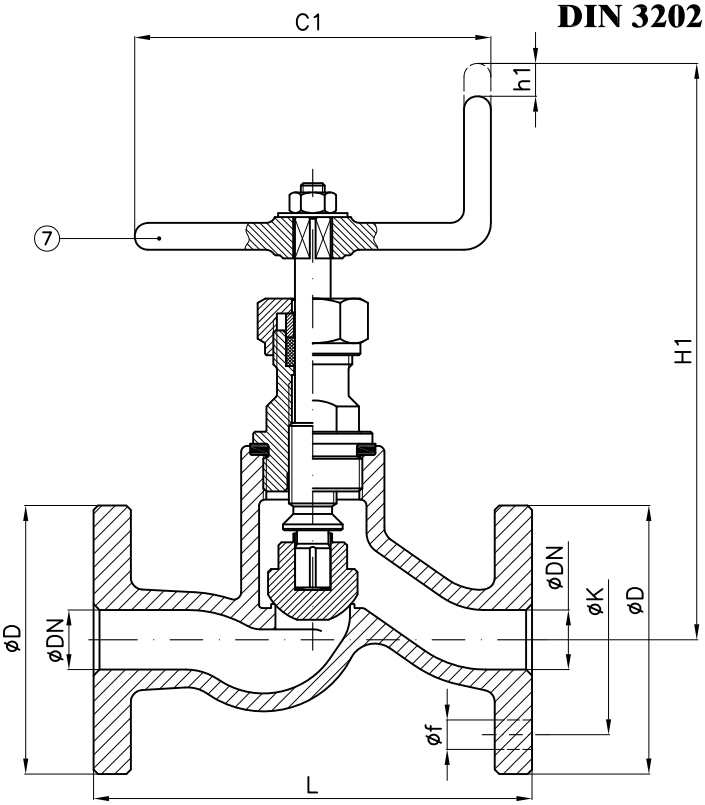

Tab.120.1B PN6	
comandata (SDSL) with fixed disc (SDSL)	UNAV 9801

Tab.120.2B PN6	
semiautomatica (SDNR) with loose disc (SDNR)	UNAV 9804

DN	C1	D1	H SDSL (~)	h SDSL	H1 SDNR (~)	h1 SDNR	L	D	K	f	Holes NO. f	Weight (Kg)
15	100	100	170	10	200	10	150	80	55	11	4	3
20	100	100	170	10	200	10	150	90	65	11	4	3
25	100	100	170	10	200	10	160	100	75	11	4	3
32	125	125	195	13	225	13	180	120	90	14	4	5

Combinazione materiali standard – Standard materials Combination			
		B/316	B/B
ITEM	DENOMINAZIONE DENOMINATION	MATERIALE MATERIAL	MATERIALE MATERIAL
01	Body	Bronze UNI EN1982 G-CuSn5Zn5Pb5	Bronze UNI EN1982 G-CuSn5Zn5Pb5
02	Bonnet	Bronze UNI EN1982 G-CuSn5Zn5Pb5	Bronze UNI EN1982 G-CuSn5Zn5Pb5
03	Integral body seat	Bronze UNI EN1982 G-CuSn5Zn5Pb5	Bronze UNI EN1982 G-CuSn5Zn5Pb5
04	Disc	Stainless steel AISI316 UNI EN10088	Bronze UNI EN1982 G-CuSn5Zn5Pb5
05	Stem	Stainless steel AISI316 UNI EN10088	Brass CW617N (OT58)
06	Handwheel	Sheet of carbon steel	Sheet of carbon steel
07	Handle	Steel A37 UNI EN10217-1	Steel A37 UNI EN10217-1
08	Gasket	Planiflex KG carbo/C PF81	Planiflex KG carbo/C PF81
09	Packing	Carbograph GR8800	Carbograph GR8800
Nota: Combinazioni materiali non standard a richiesta Note: Non standard materials combinations on request			

Valvole a via diritta - serie pesante PN6
Globe valves straight type - heavy class NP6

Tab.120G

Conform to:
UNI EN1092
DIN 3202

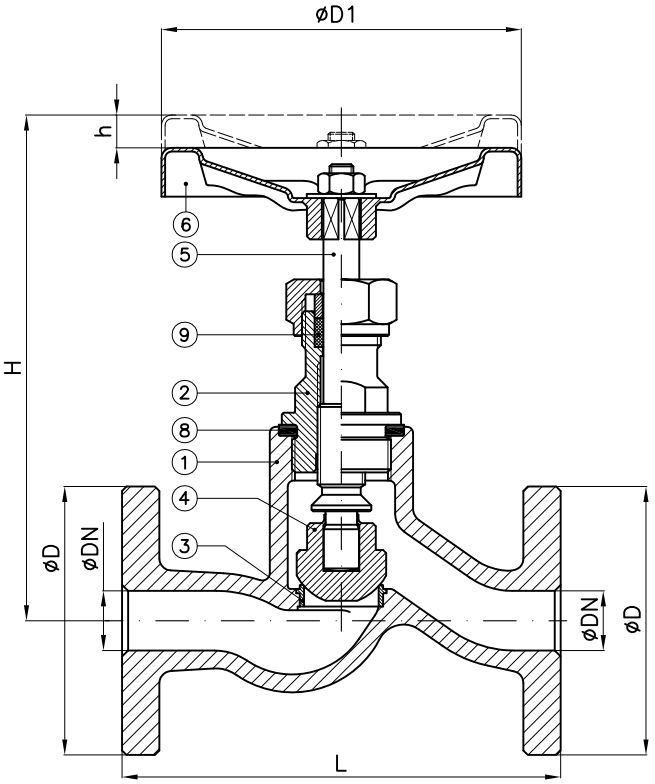

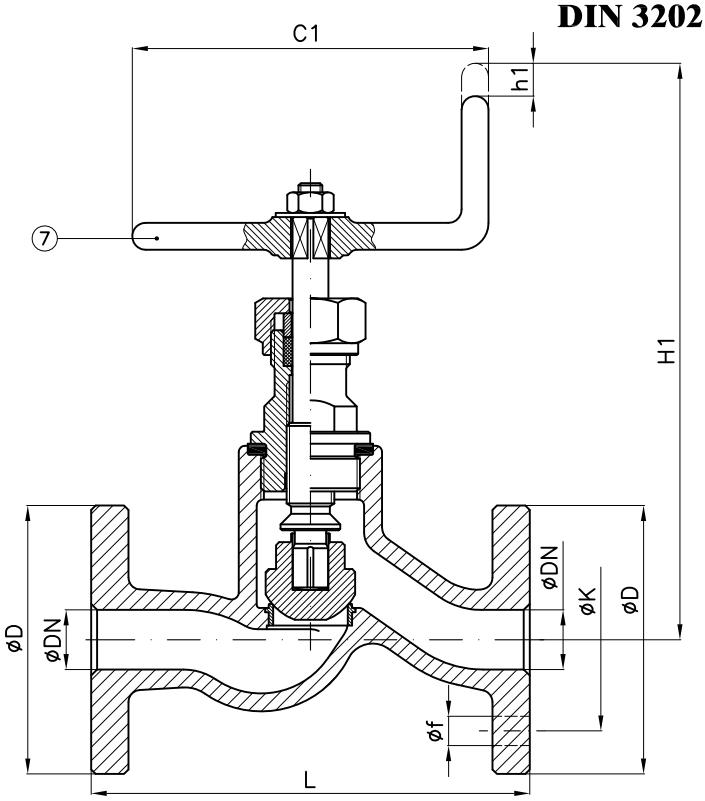

Tab.120.1G PN6	
comandata (SDSL) with fixed disc (SDSL)	UNI 3409 UNAV 8406

Tab.120.2G PN6	
semiautomatica (SDNR) with loose disc (SDNR)	UNI 3413 UNAV 8419

DN	C1	D1	H SDSL (~)	h SDSL	H1 SDNR (~)	h1 SDNR	L	D	K	f	Holes NO. f	Weight (Kg)
15	100	100	170	10	200	10	150	80	55	11	4	3
20	100	100	170	10	200	10	150	90	65	11	4	3.5
25	100	100	170	10	200	10	160	100	75	11	4	4
32	125	125	205	13	235	13	180	120	90	14	4	5

Combinazione materiali standard – Standard materials Combination			
		G/316	G/B
ITEM	DENOMINAZIONE DENOMINATION	MATERIALE MATERIAL	MATERIALE MATERIAL
01	Body	Cast iron UNI EN1561 EN-GJL-250	Cast iron UNI EN1561 EN-GJL-250
02	Bonnet	Carbon steel GE240 UNI EN10293	Carbon steel GE240 UNI EN10293
03	Body seat	Stainless steel AISI316 UNI EN10088	Stainless steel AISI316 UNI EN10088
04	Disc	Stainless steel AISI316 UNI EN10088	Bronze UNI EN1982 G-CuSn5Zn5Pb5
05	Stem	Stainless steel AISI316 UNI EN10088	Brass CW617N (OT58)
06	Handwheel	Sheet of carbon steel	Sheet of carbon steel
07	Handle	Steel A37 UNI EN10217-1	Steel A37 UNI EN10217-1
08	Gasket	Planiflex KG carbo/C PF81	Planiflex KG carbo/C PF81
09	Packing	Carbograph GR8800	Carbograph GR8800
Nota: Combinazioni materiali non standard a richiesta Note: Non standard materials combinations on request			

Valvole a via diritta - serie pesante PN6
Globe valves straight type - heavy class NP6

Tab.120GS

Conform to:
UNI EN1092
DIN 3202

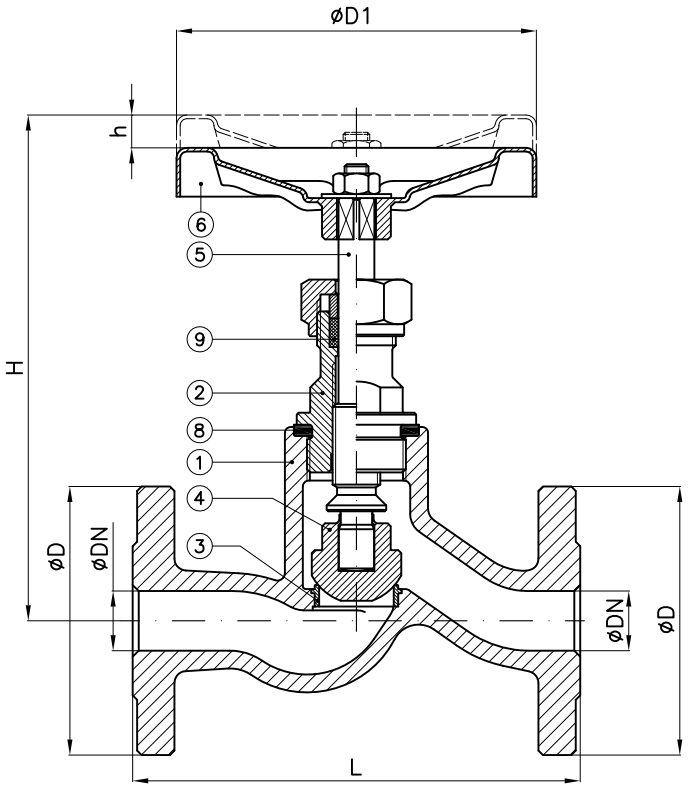

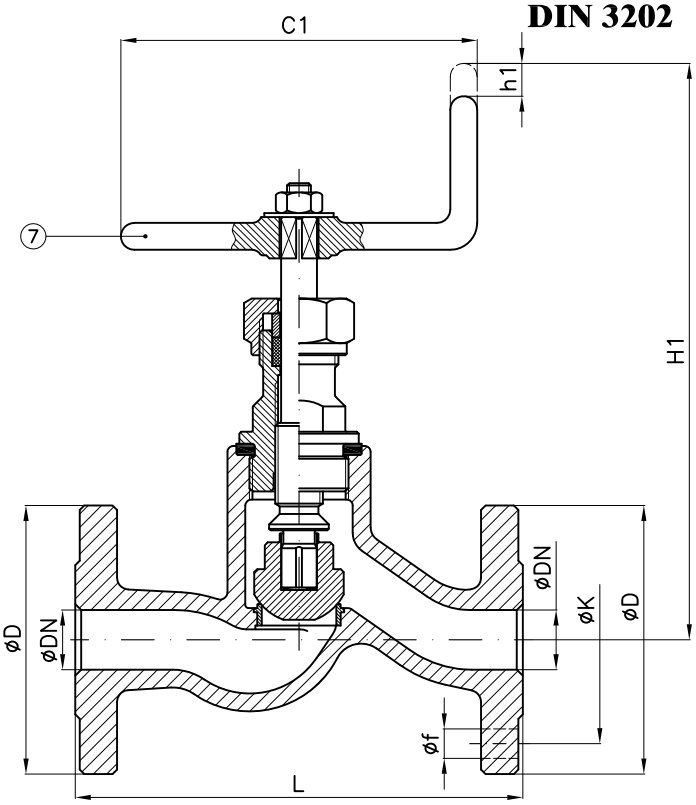

Tab.120.1GS PN6	
comandata (SDSL) with fixed disc (SDSL)	UNI 3409 UNAV 8406 NS 401130

Tab.120.2GS PN6	
semiautomatica (SDNR) with loose disc (SDNR)	UNI 3413 UNAV 8419 NS 403130

DN	C1	D1	H SDSL (~)	h SDSL	H1 SDNR (~)	h1 SDNR	L	D	K	f	Holes NO. f	Weight (Kg)
15	100	100	170	10	200	10	150	80	55	11	4	3
20	100	100	170	10	200	10	150	90	65	11	4	3.5
25	100	100	170	10	200	10	160	100	75	11	4	4
32	125	125	205	13	235	13	180	120	90	14	4	5

Combinazione materiali standard – Standard materials Combination			
		GS/316	GS/B
ITEM	DENOMINAZIONE DENOMINATION	MATERIALE MATERIAL	MATERIALE MATERIAL
01	Body	Nodular cast iron EN-GJS-400-15U UNI EN1563	Nodular cast iron EN-GJS-400-15U UNI EN1563
02	Bonnet	Carbon steel GE240 UNI EN10293	Carbon steel GE240 UNI EN10293
03	Body seat	Stainless steel AISI316 UNI EN10088	Stainless steel AISI316 UNI EN10088
04	Disc	Stainless steel AISI316 UNI EN10088	Bronze UNI EN1982 G-CuSn5Zn5Pb5
05	Stem	Stainless steel AISI316 UNI EN10088	Brass CW617N (OT58)
06	Handwheel	Sheet of carbon steel	Sheet of carbon steel
07	Handle	Steel A37 UNI EN10217-1	Steel A37 UNI EN10217-1
08	Gasket	Planiflex KG carbo/C PF81	Planiflex KG carbo/C PF81
09	Packing	Carbograph GR8800	Carbograph GR8800
Nota: Combinazioni materiali non standard a richiesta Note: Non standard materials combinations on request			

Valvole a via diritta - serie pesante PN6
Globe valves straight type - heavy class NP6

Tab.122A

Conform to:
UNI EN1092
DIN 3202

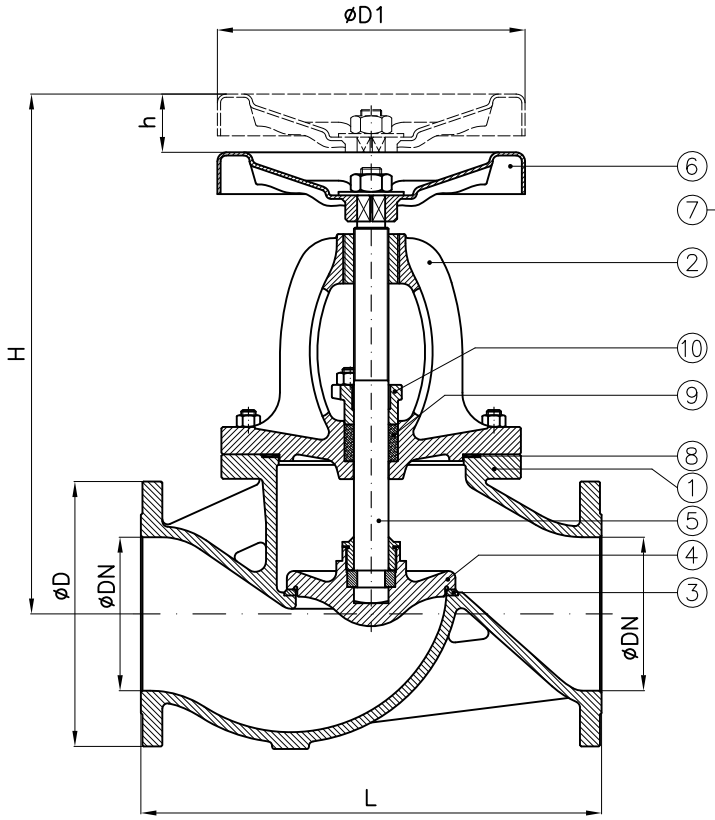

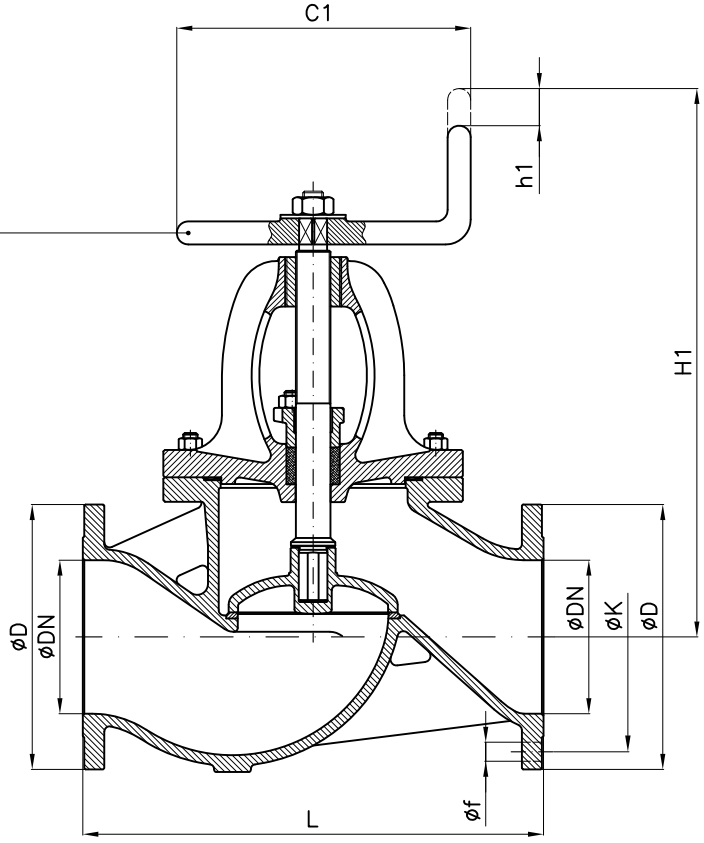

Tab.122.1A PN6	
comandata (SDSL) with fixed disc (SDSL)	UNAV 9827

Tab.122.2A PN6	
semiautomatica (SDNR) with loose disc (SDNR)	UNAV 9830

DN	C1	D1	H SDSL (~)	h SDSL	H1 SDNR (~)	h1 SDNR	L	D	K	f	Holes NO. f	Weight (Kg)
40	125	125	265	20	285	12	200	130	100	14	4	11
50	125	125	280	24	300	14	230	140	110	14	4	12
65	175	175	340	32	360	18	290	160	130	14	4	20
80	175	175	355	35	375	20	310	190	150	18	4	25
100	200	200	415	45	425	28	350	210	170	18	4	38
125	225	225	450	54	460	32	400	240	200	18	8	59
150	225	300	485	62	500	38	480	265	225	18	8	68
175	250	400	580	74	585	45	550	295	255	18	8	100
200	250	400	615	82	605	50	600	320	280	18	8	127
250	300	500	695	100	685	66	730	375	335	18	12	174
300	425	575	865	118	845	85	850	440	395	22	12	250
350	500		1000	130	1050	90	980	490	445	22	12	400
400	575		1100	135	1150	100	1100	540	495	22	16	554
450	650		1200	160	1250	115	1300	595	550	22	16	
500			1350	180	1400	130	1500	645	600	22	20	
600			1550	215	1600	160	1800	755	705	26	20	

Combinazione materiali standard – Standard materials Combination				
		A/316	A/B	CF8M/316
ITEM	DENOMINAZIONE DENOMINATION	MATERIALE MATERIAL	MATERIALE MATERIAL	MATERIALE MATERIAL
01	Body	Cast steel GP240-GH UNI EN10213	Cast steel GP240-GH UNI EN10213	Stainless steel CF8M ASTM A351
02	Bonnet	Cast steel GP240-GH UNI EN10213	Cast steel GP240-GH UNI EN10213	Stainless steel CF8M ASTM A351
03	Body seat	Stainless steel AISI316 UNI EN10088	Stainless steel AISI316 UNI EN10088	Stainless steel AISI316 UNI EN10088
04	Disc (≤ DN80)	Stainless steel AISI316 UNI EN10088	Bronze UNI EN1982 G-CuSn5Zn5Pb5	Stainless steel AISI316 UNI EN10088
04	Disc (≥ DN100)	Cast steel GP240-GH UNI EN10213 plus AISI316 facing welding	Bronze UNI EN1982 G-CuSn5Zn5Pb5	Stainless steel CF8M ASTM A351
05	Stem	Stainless steel AISI316 UNI EN10088	Brass CW617N (OT58)	Stainless steel AISI316 UNI EN10088
06	Handwheel	Sheet of carbon steel	Sheet of carbon steel	Sheet of carbon steel
07	Handle	Steel A37 UNI EN10217-1	Steel A37 UNI EN10217-1	Steel A37 UNI EN10217-1
08	Gasket	Planiflex KG carbo/C PF81	Planiflex KG carbo/C PF81	Planiflex KG carbo/C PF81
09	Packing	Carbograph GR8800	Carbograph GR8800	Carbograph GR8800
10	Gland bushing	Steel Fe360B (S235JRC) UNI EN10025	Steel Fe360B (S235JRC) UNI EN10025	Stainless steel AISI316 UNI EN10088

Nota: Combinazioni materiali non standard a richiesta
Note: Non standard materials combinations on request

Valvole a globo PN6 con attuatore idraulico doppio effetto
Globe valves NP6 with hydraulic double acting actuator

Tab.122A-DA

(Ex Tab. 129/1-DA)

Conform to:
UNI EN1092
DIN 3202

Esecuzione 01
con otturatore Com.

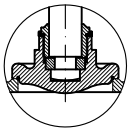

Execution 01
with SDSL disc

Esecuzione 02
con otturatore Aut.

Execution 02
with SDNR disc

con Proximity limit switch (a richiesta)
with Proximity limit switch (on request)

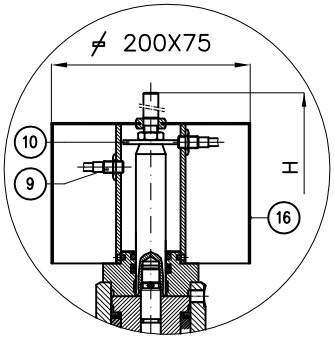

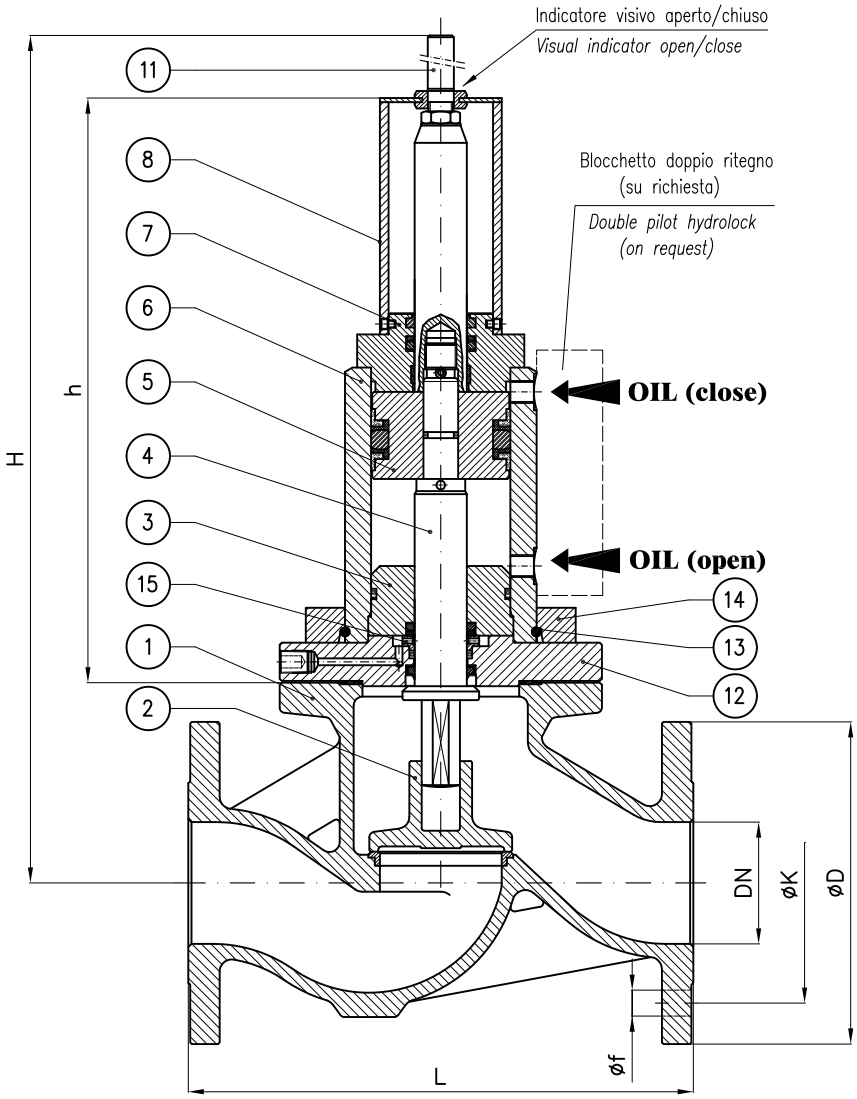

N.B.: Il dimensionamento e quindi anche l'ingombro dell'attuatore è funzione dei seguenti dati che devono sempre essere forniti:

- Pressione esercizio della valvola
- pressione olio all'attuatore
- Servizio

Note.: The size and so the overall dimension of the actuator depends by the following informations that should always be provided:

- *Valve's working pressure*
- *Oil pressure to actuator*
- *Service*

DN	h (~)	H (~)	L	øD	K	f	Holes NO. f	Weight (Kg)
20	210	280	150	90	65	11	4	
25	210	290	160	100	75	11	4	
32	335	440	180	120	90	14	4	
40	335	445	200	130	100	14	4	
50	320	445	230	140	110	14	4	
65	315	475	290	160	130	14	4	
80	340	490	310	190	150	18	4	
100	340	515	350	210	170	18	4	
125	360	565	400	240	200	18	8	
150	360	585	480	265	225	18	8	
200	440	760	600	320	280	18	8	
250	440	780	730	375	335	18	12	
300	525	975	850	440	395	22	12	

Combinazione materiali standard – Standard materials Combination

ITEM	DENOMINAZIONE DENOMINATION	A/316 MATERIALE MATERIAL	A/B MATERIALE MATERIAL	CF8M/316 MATERIALE MATERIAL
01	Body	Cast steel GP240-GH UNI EN10213	Cast steel GP240-GH UNI EN10213	Stainless steel CF8M ASTM A351
02	Disc (≤ DN80)	Stainless steel AISI316 UNI EN10088	Bronze UNI EN1982 G-CuSn5Zn5Pb5	Stainless steel AISI316 UNI EN10088
02	Disc (≥ DN100)	Cast steel GP240-GH UNI EN10213 plus AISI316 facing welding	Bronze UNI EN1982 G-CuSn5Zn5Pb5	Cast steel GP240-GH UNI EN10213 plus AISI316 facing welding
03	Inner head flange	Cast iron UNI EN1561 EN-GJL-250	Cast iron UNI EN1561 EN-GJL-250	Cast iron UNI EN1561 EN-GJL-250
04	Stem	Stainless steel AISI316 UNI EN10088	Stainless steel AISI316 UNI EN10088	Stainless steel AISI316 UNI EN10088
05	Piston	Steel 9SMnPb28 UNI EN10087	Steel 9SMnPb28 UNI EN10087	Steel 9SMnPb28 UNI EN10087
06	Housing welded assembly	Fe52.2 GALVANIZED	Fe52.2 GALVANIZED	Fe52.2 GALVANIZED
07	Head flange	Steel UNI C40	Steel UNI C40	Steel UNI C40
08	Proximity switch support	Fe37 GALVANIZED	Fe37 GALVANIZED	Fe37 GALVANIZED
09	Proximity switch	CEED BG12/2PF2 PNP CEOM E2FX2E2G NPN	CEED BG12/2PF2 PNP CEOM E2FX2E2G NPN	CEED BG12/2PF2 PNP CEOM E2FX2E2G NPN
10	Indicator washer	Steel 9SMnPb28 UNI EN10087	Steel 9SMnPb28 UNI EN10087	Steel 9SMnPb28 UNI EN10087
11	Index open/close	Brass CW617N (OT58)	Brass CW617N (OT58)	Brass CW617N (OT58)
12	Flange	Steel UNI C40	Steel UNI C40	Steel UNI C40
13	Snap ring ø5	Stainless steel AISI316 UNI EN10088	Stainless steel AISI316 UNI EN10088	Stainless steel AISI316 UNI EN10088
14	Collar	Fe52.2 GALVANIZED	Fe52.2 GALVANIZED	Fe52.2 GALVANIZED
15	Back rod	Steel 9SMnPb28 UNI EN10087	Steel 9SMnPb28 UNI EN10087	Steel 9SMnPb28 UNI EN10087
16	Shield	Stainless steel AISI316 UNI EN10088	Stainless steel AISI316 UNI EN10088	Stainless steel AISI316 UNI EN10088

Nota: Combinazioni materiali non standard a richiesta
Note: Non standard materials combinations on request

Valvole a globo PN6 con attuatore idraulico semplice effetto normalmente chiuso (FC)

Globe valves NP6 with hydraulic single acting actuator fail close (FC)

Tab.122A-SR-FC

(Ex Tab. 129/1-SR-FC)

Conform to:
UNI EN1092
DIN 3202

Esecuzione 01
con otturatore Com.

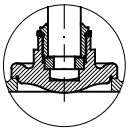

Execution 01
with SDSL disc

Esecuzione 02
con otturatore Aut.

Execution 02
with SDNR disc

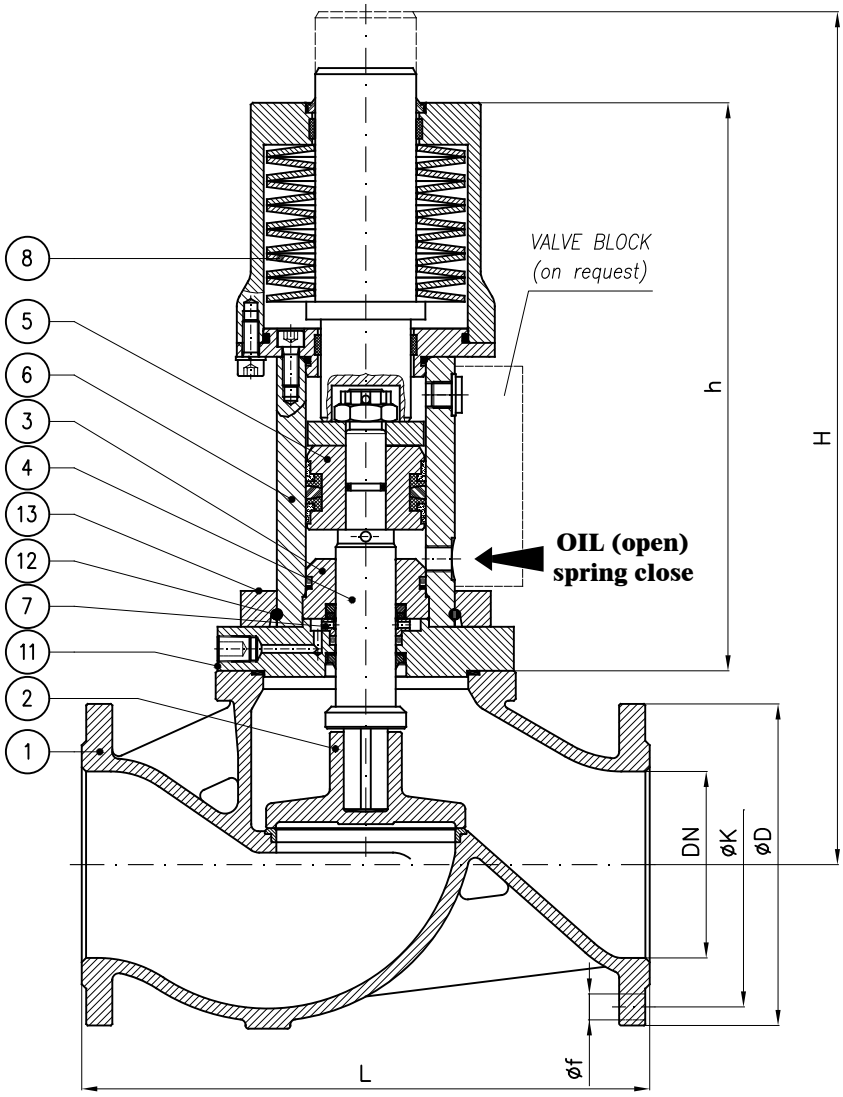

con Proximity limit switch (a richiesta)
with Proximity limit switch (on request)

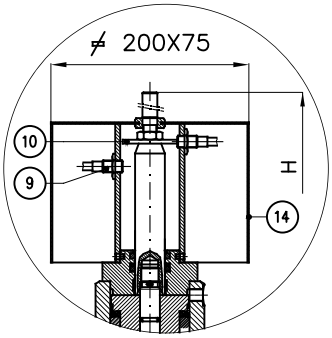

N.B.: Il dimensionamento e quindi anche l'ingombro dell'attuatore è funzione dei seguenti dati che devono sempre essere forniti:

- Pressione esercizio della valvola
- pressione olio all'attuatore
- Servizio

Note.: The size and so the overall dimension of the actuator depends by the following informations that should always be provided:

- *Valve's working pressure*
- *Oil pressure to actuator*
- *Service*

DN	h (~)	H (~)	L	øD	K	f	Holes NO. f	Weight (Kg)
32	305	410	180	120	90	14	4	
40	305	410	200	130	100	14	4	
50	295	410	230	140	110	14	4	
65	285	430	290	160	130	14	4	
80	335	485	310	190	150	18	4	
100	320	495	350	210	170	18	4	
125	420	620	400	240	200	18	8	
150	485	710	480	265	225	18	8	
200	485	780	600	320	280	18	8	
250	565	830	730	375	335	18	12	

Combinazione materiali standard – Standard materials Combination

		A/316	A/B	CF8M/316
ITEM	DENOMINAZIONE DENOMINATION	MATERIALE MATERIAL	MATERIALE MATERIAL	MATERIALE MATERIAL
01	Body	Cast steel GP240-GH UNI EN10213	Cast steel GP240-GH UNI EN10213	Stainless steel CF8M ASTM A351
02	Disc (≤ DN80)	Stainless steel AISI316 UNI EN10088	Bronze UNI EN1982 G-CuSn5Zn5Pb5	Stainless steel AISI316 UNI EN10088
02	Disc (≥ DN100)	Cast steel GP240-GH UNI EN10213 plus AISI316 facing welding	Bronze UNI EN1982 G-CuSn5Zn5Pb5	Cast steel GP240-GH UNI EN10213 plus AISI316 facing welding
03	Inner head flange	Cast iron UNI EN1561 EN-GJL-250	Cast iron UNI EN1561 EN-GJL-250	Cast iron UNI EN1561 EN-GJL-250
04	Stem	Stainless steel AISI316 UNI EN10088	Stainless steel AISI316 UNI EN10088	Stainless steel AISI316 UNI EN10088
05	Piston	Steel 9SMnPb28 UNI EN10087	Steel 9SMnPb28 UNI EN10087	Steel 9SMnPb28 UNI EN10087
06	Housing assembly	Fe52.2 GALVANIZED	Fe52.2 GALVANIZED	Fe52.2 GALVANIZED
07	Back rod	Steel 9SMnPb28 UNI EN10087	Steel 9SMnPb28 UNI EN10087	Steel 9SMnPb28 UNI EN10087
08	Disk spring	Steel UNI EN10270	Steel UNI EN10270	Steel UNI EN10270
09	Proximity switch	CEED BG12/2PF2 PNP CEOM E2FX2E2G NPN	CEED BG12/2PF2 PNP CEOM E2FX2E2G NPN	CEED BG12/2PF2 PNP CEOM E2FX2E2G NPN
10	Indicator washer	Steel 9SMnPb28 UNI EN10087	Steel 9SMnPb28 UNI EN10087	Steel 9SMnPb28 UNI EN10087
11	Flange	Steel UNI C40	Steel UNI C40	Steel UNI C40
12	Snap ring ø5	Stainless steel AISI316 UNI EN10088	Stainless steel AISI316 UNI EN10088	Stainless steel AISI316 UNI EN10088
13	Collar	Fe52.2 GALVANIZED	Fe52.2 GALVANIZED	Fe52.2 GALVANIZED
14	Shield	Stainless steel AISI316 UNI EN10088	Stainless steel AISI316 UNI EN10088	Stainless steel AISI316 UNI EN10088

Nota: Combinazioni materiali non standard a richiesta
Note: Non standard materials combinations on request

Valvole a globo PN6 con attuatore idraulico semplice effetto normalmente aperto (FO)

Globe valves NP6 with hydraulic single acting actuator fail open (FO)

Tab.122A-SR-FO

(Ex Tab. 129/1-SR-FO)

Conform to:
UNI EN1092
DIN 3202

Esecuzione 01
con otturatore Com.

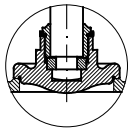

Execution 01
with SDSL disc

Esecuzione 02
con otturatore Aut.

Execution 02
with SDNR disc

con Proximity limit switch (a richiesta)
with Proximity limit switch (on request)

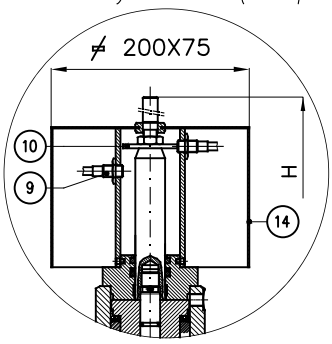

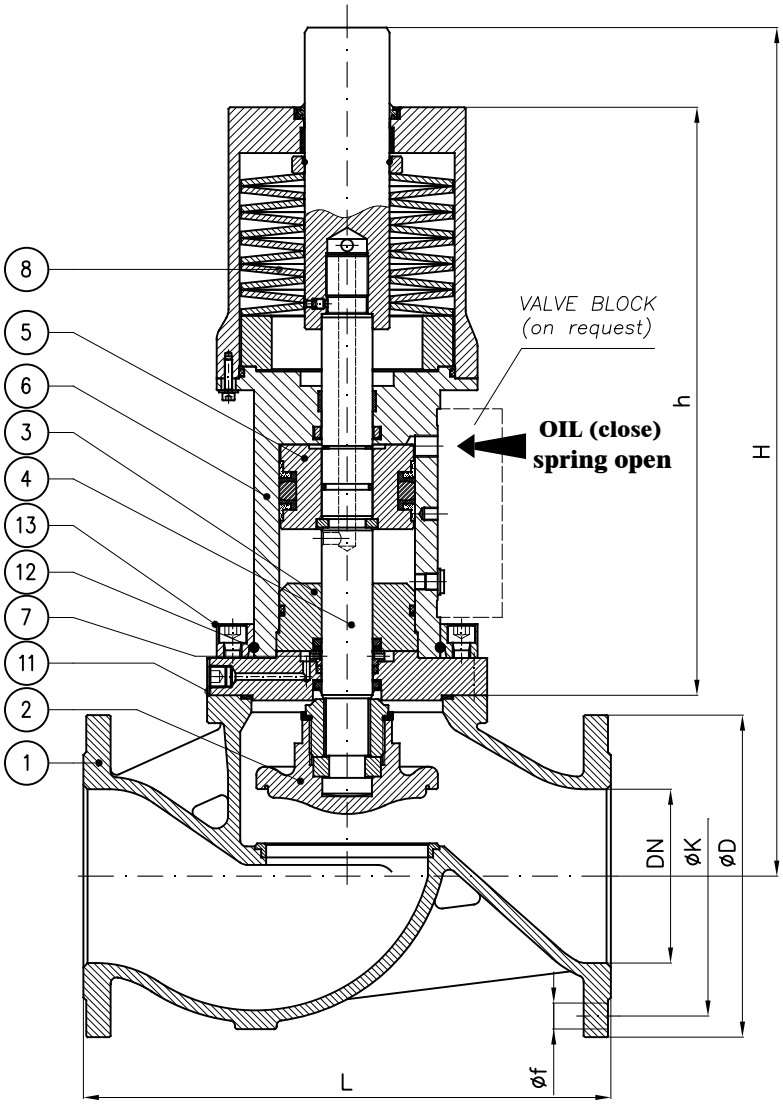

N.B.: Il dimensionamento e quindi anche l'ingombro dell'attuatore è funzione dei seguenti dati che devono sempre essere forniti:

- Pressione esercizio della valvola
- pressione olio all'attuatore
- Servizio

Note.: The size and so the overall dimension of the actuator depends by the following informations that should always be provided:

- *Valve's working pressure*
- *Oil pressure to actuator*
- *Service*

DN	h (~)	H (~)	L	øD	K	f	Holes NO. f	Weight (Kg)
32	305	410	180	120	90	14	4	
40	305	410	200	130	100	14	4	
50	295	410	230	140	110	14	4	
65	285	430	290	160	130	14	4	
80	335	485	310	190	150	18	4	
100	320	495	350	210	170	18	4	
125	420	620	400	240	200	18	8	
150	485	710	480	265	225	18	8	
200	485	780	600	320	280	18	8	
250	565	830	730	375	335	18	12	

Combinazione materiali standard – Standard materials Combination				
		A/316	A/B	CF8M/316
ITEM	DENOMINAZIONE DENOMINATION	MATERIALE MATERIAL	MATERIALE MATERIAL	MATERIALE MATERIAL
01	Body	Cast steel GP240-GH UNI EN10213	Cast steel GP240-GH UNI EN10213	Stainless steel CF8M ASTM A351
02	Disc (≤ DN80)	Stainless steel AISI316 UNI EN10088	Bronze UNI EN1982 G-CuSn5Zn5Pb5	Stainless steel AISI316 UNI EN10088
02	Disc (≥ DN100)	Cast steel GP240-GH UNI EN10213 plus AISI316 facing welding	Bronze UNI EN1982 G-CuSn5Zn5Pb5	Cast steel GP240-GH UNI EN10213 plus AISI316 facing welding
03	Inner head flange	Cast iron UNI EN1561 EN-GJL-250	Cast iron UNI EN1561 EN-GJL-250	Cast iron UNI EN1561 EN-GJL-250
04	Stem	Stainless steel AISI316 UNI EN10088	Stainless steel AISI316 UNI EN10088	Stainless steel AISI316 UNI EN10088
05	Piston	Steel 9SMnPb28 UNI EN10087	Steel 9SMnPb28 UNI EN10087	Steel 9SMnPb28 UNI EN10087
06	Housing assembly	Fe52.2 GALVANIZED	Fe52.2 GALVANIZED	Fe52.2 GALVANIZED
07	Back rod	Steel 9SMnPb28 UNI EN10087	Steel 9SMnPb28 UNI EN10087	Steel 9SMnPb28 UNI EN10087
08	Disk spring	Steel UNI EN10270	Steel UNI EN10270	Steel UNI EN10270
09	Proximity switch	CEED BG12/2PF2 PNP CEOM E2FX2E2G NPN	CEED BG12/2PF2 PNP CEOM E2FX2E2G NPN	CEED BG12/2PF2 PNP CEOM E2FX2E2G NPN
10	Indicator washer	Steel 9SMnPb28 UNI EN10087	Steel 9SMnPb28 UNI EN10087	Steel 9SMnPb28 UNI EN10087
11	Flange	Steel UNI C40	Steel UNI C40	Steel UNI C40
12	Snap ring ø5	Stainless steel AISI316 UNI EN10088	Stainless steel AISI316 UNI EN10088	Stainless steel AISI316 UNI EN10088
13	Collar	Fe52.2 GALVANIZED	Fe52.2 GALVANIZED	Fe52.2 GALVANIZED
14	Shield	Stainless steel AISI316 UNI EN10088	Stainless steel AISI316 UNI EN10088	Stainless steel AISI316 UNI EN10088

Nota: Combinazioni materiali non standard a richiesta
Note: Non standard materials combinations on request

Valvole a via diritta - serie pesante PN6
Globe valves straight type - heavy class NP6

Tab.122B

Conform to:
UNI EN1092
DIN 3202

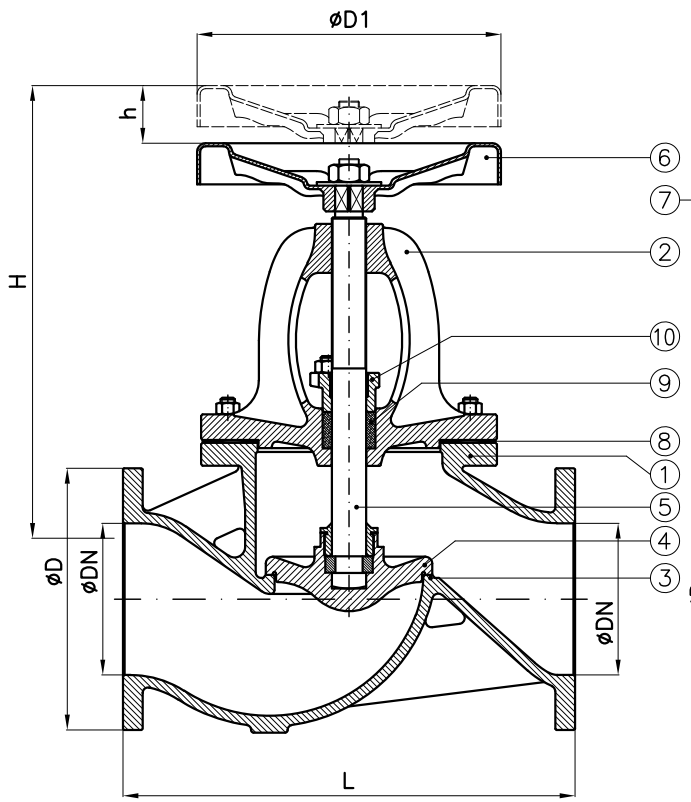

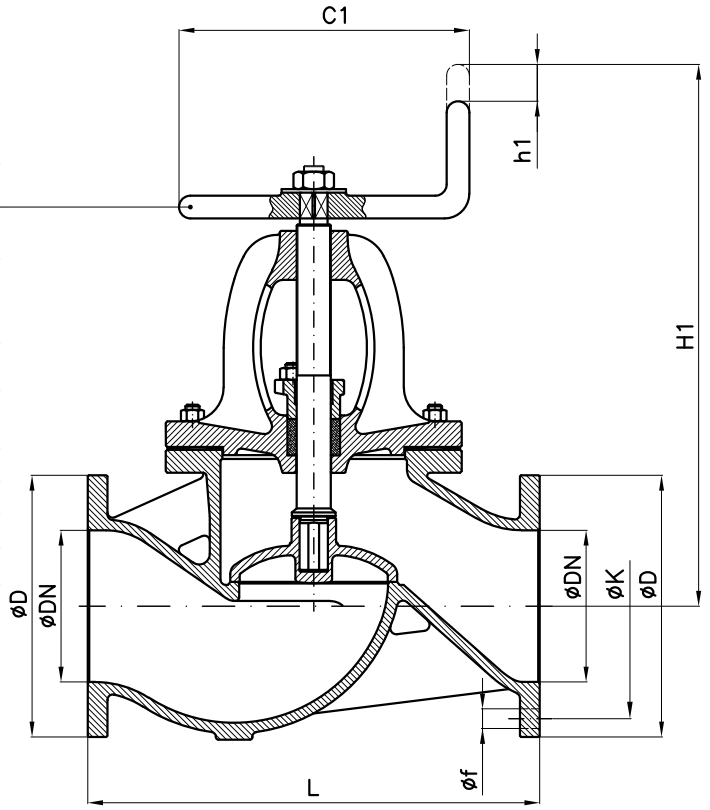

Tab.122.1B PN6	
comandata (SDSL) with fixed disc (SDSL)	UNAV 9802

Tab.122.2B PN6	
semiautomatica (SDNR) with loose disc (SDNR)	UNAV 9805

DN	C1	D1	H SDSL (~)	h SDSL	H1 SDNR (~)	h1 SDNR	L	D	K	f	Holes NO. f	Weight (Kg)
40	125	125	265	20	285	12	200	130	100	14	4	9
50	125	125	280	24	300	14	230	140	110	14	4	11
65	175	175	340	32	360	18	290	160	130	14	4	18
80	175	175	355	35	375	20	310	190	150	18	4	23
100	200	200	415	45	425	28	350	210	170	18	4	33
125	225	225	450	54	460	32	400	240	200	18	8	52
150	225	300	485	62	500	38	480	265	225	18	8	81
175	250	400	580	74	585	45	550	295	255	18	8	104
200	250	400	615	82	605	50	600	320	280	18	8	105
250	300	500	695	100	685	66	730	375	335	18	12	202
300	425	575	865	118	845	85	850	440	395	22	12	307
350	500		1000	130	1050	90	980	490	445	22	12	425
400	575		1100	135	1150	100	1100	540	495	22	16	580
450	650		1200	160	1250	115	1300	595	550	22	16	
500			1350	180	1400	130	1500	645	600	22	20	
600			1550	215	1600	160	1800	755	705	26	20	

Combinazione materiali standard – Standard materials Combination			
		B/316	B/B
ITEM	DENOMINAZIONE DENOMINATION	MATERIALE MATERIAL	MATERIALE MATERIAL
01	Body	Bronze UNI EN1982 G-CuSn5Zn5Pb5	Bronze UNI EN1982 G-CuSn5Zn5Pb5
02	Bonnet	Bronze UNI EN1982 G-CuSn5Zn5Pb5	Bronze UNI EN1982 G-CuSn5Zn5Pb5
03	Integral body seat	Bronze UNI EN1982 G-CuSn5Zn5Pb5	Bronze UNI EN1982 G-CuSn5Zn5Pb5
04	Disc	Stainless steel AISI316 UNI EN10088	Bronze UNI EN1982 G-CuSn5Zn5Pb5
05	Stem	Stainless steel AISI316 UNI EN10088	Brass CW617N (OT58)
06	Handwheel	Sheet of carbon steel	Sheet of carbon steel
07	Handle	Steel A37 UNI EN10217-1	Steel A37 UNI EN10217-1
08	Gasket	EPDM	EPDM
09	Packing	Carbograph GR8800	Carbograph GR8800
10	Gland bushing	Brass CW509L (OT60)	Brass CW509L (OT60)
Nota: Combinazioni materiali non standard a richiesta Note: Non standard materials combinations on request			

Valvole a globo PN6 con attuatore idraulico doppio effetto
Globe valves NP6 with hydraulic double acting actuator

Tab.122B-DA

(Ex Tab. 129/1-DA)

Conform to:
UNI EN1092
DIN 3202

Esecuzione 01
con otturatore Com.

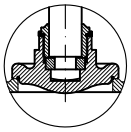

Execution 01
with SDSL disc

Esecuzione 02
con otturatore Aut.

Execution 02
with SDNR disc

con Proximity limit switch (a richiesta)
with Proximity limit switch (on request)

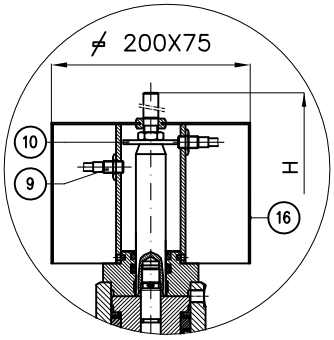

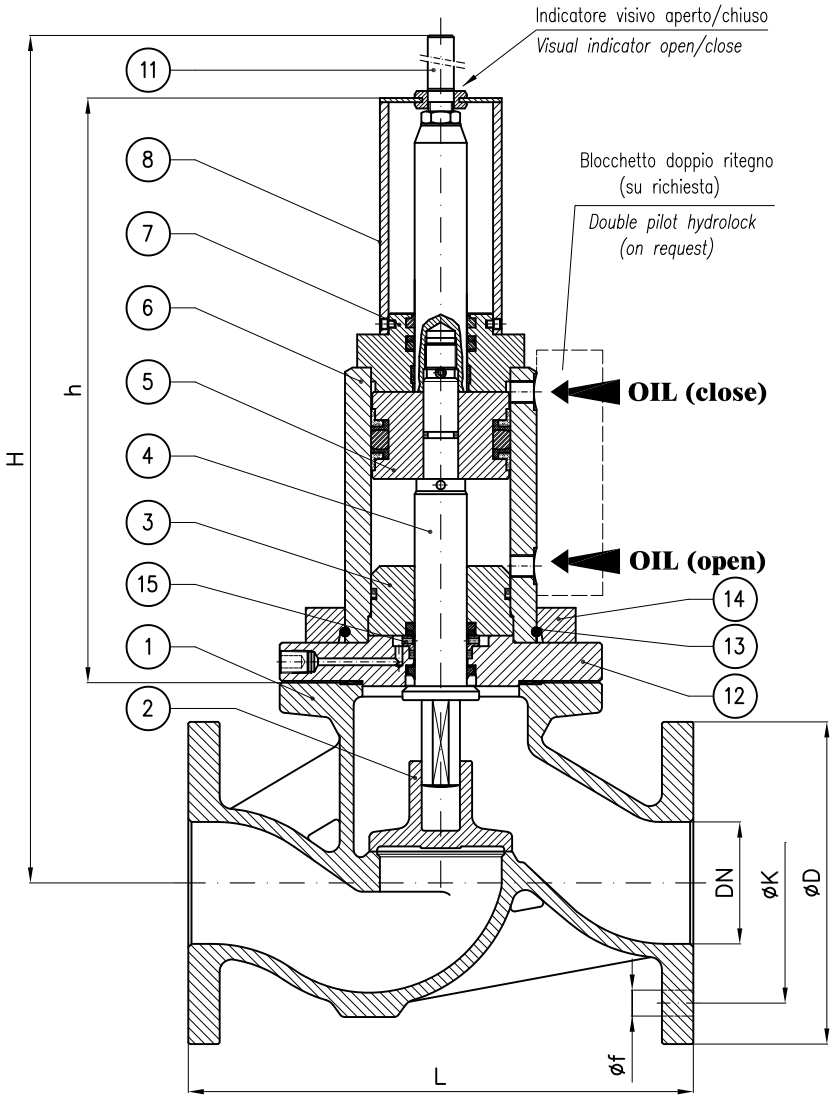

N.B.: Il dimensionamento e quindi anche l'ingombro dell'attuatore è funzione dei seguenti dati che devono sempre essere forniti:

- Pressione esercizio della valvola
- pressione olio all'attuatore
- Servizio

Note.: The size and so the overall dimension of the actuator depends by the following informations that should always be provided:

- *Valve's working pressure*
- *Oil pressure to actuator*
- *Service*

DN	h (~)	H (~)	L	øD	K	f	Holes NO. f	Weight (Kg)
20	210	280	150	90	65	11	4	
25	210	290	160	100	75	11	4	
32	335	440	180	120	90	14	4	
40	335	445	200	130	100	14	4	
50	320	445	230	140	110	14	4	
65	315	475	290	160	130	14	4	
80	340	490	310	190	150	18	4	
100	340	515	350	210	170	18	4	
125	360	565	400	240	200	18	8	
150	360	585	480	265	225	18	8	
200	440	760	600	320	280	18	8	
250	440	780	730	375	335	18	12	
300	525	975	850	440	395	22	12	

Combinazione materiali standard – Standard materials Combination			
		B/316	B/B
ITEM	DENOMINAZIONE DENOMINATION	MATERIALE MATERIAL	MATERIALE MATERIAL
01	Body	Bronze UNI EN1982 G-CuSn5Zn5Pb5	Bronze UNI EN1982 G-CuSn5Zn5Pb5
02	Disc (≤ DN80)	Stainless steel AISI316 UNI EN10088	Bronze UNI EN1982 G-CuSn5Zn5Pb5
02	Disc (≥ DN100)	Cast steel GP240-GH UNI EN10213 plus AISI316 facing welding	Bronze UNI EN1982 G-CuSn5Zn5Pb5
03	Inner head flange	Cast iron UNI EN1561 EN-GJL-250	Cast iron UNI EN1561 EN-GJL-250
04	Stem	Stainless steel AISI316 UNI EN10088	Stainless steel AISI316 UNI EN10088
05	Piston	Steel 9SMnPb28 UNI EN10087	Steel 9SMnPb28 UNI EN10087
06	Housing welded assembly	Fe52.2 GALVANIZED	Fe52.2 GALVANIZED
07	Head flange	Steel UNI C40	Steel UNI C40
08	Proximity switch support	Fe37 GALVANIZED	Fe37 GALVANIZED
09	Proximity switch	CEED BG12/2PF2 PNP CEOM E2FX2E2G NPN	CEED BG12/2PF2 PNP CEOM E2FX2E2G NPN
10	Indicator washer	Steel 9SMnPb28 UNI EN10087	Steel 9SMnPb28 UNI EN10087
11	Index open/close	Brass CW617N (OT58)	Brass CW617N (OT58)
12	Flange	Bronze UNI EN1982	Bronze UNI EN1982
13	Snap ring ø5	Stainless steel AISI316 UNI EN10088	Stainless steel AISI316 UNI EN10088
14	Collar	Fe52.2 GALVANIZED	Fe52.2 GALVANIZED
15	Back rod	Steel 9SMnPb28 UNI EN10087	Steel 9SMnPb28 UNI EN10087
16	Shield	Stainless steel AISI316 UNI EN10088	Stainless steel AISI316 UNI EN10088
Nota: Combinazioni materiali non standard a richiesta Note: Non standard materials combinations on request			

Valvole a globo PN6 con attuatore idraulico semplice effetto normalmente chiuso (FC)

Globe valves NP6 with hydraulic single acting actuator fail close (FC)

Tab.122B-SR-FC

(Ex Tab. 129/1-SR-FC)

Conform to:
UNI EN1092
DIN 3202

Esecuzione 01
con otturatore Com.

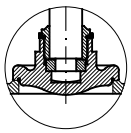

Execution 01
with SDSL disc

Esecuzione 02
con otturatore Aut.

Execution 02
with SDNR disc

con Proximity limit switch (a richiesta)
with Proximity limit switch (on request)

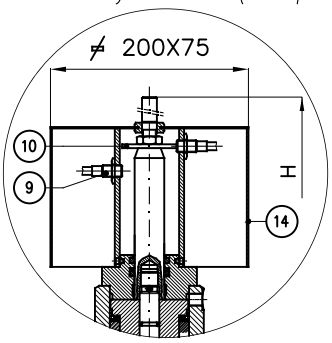

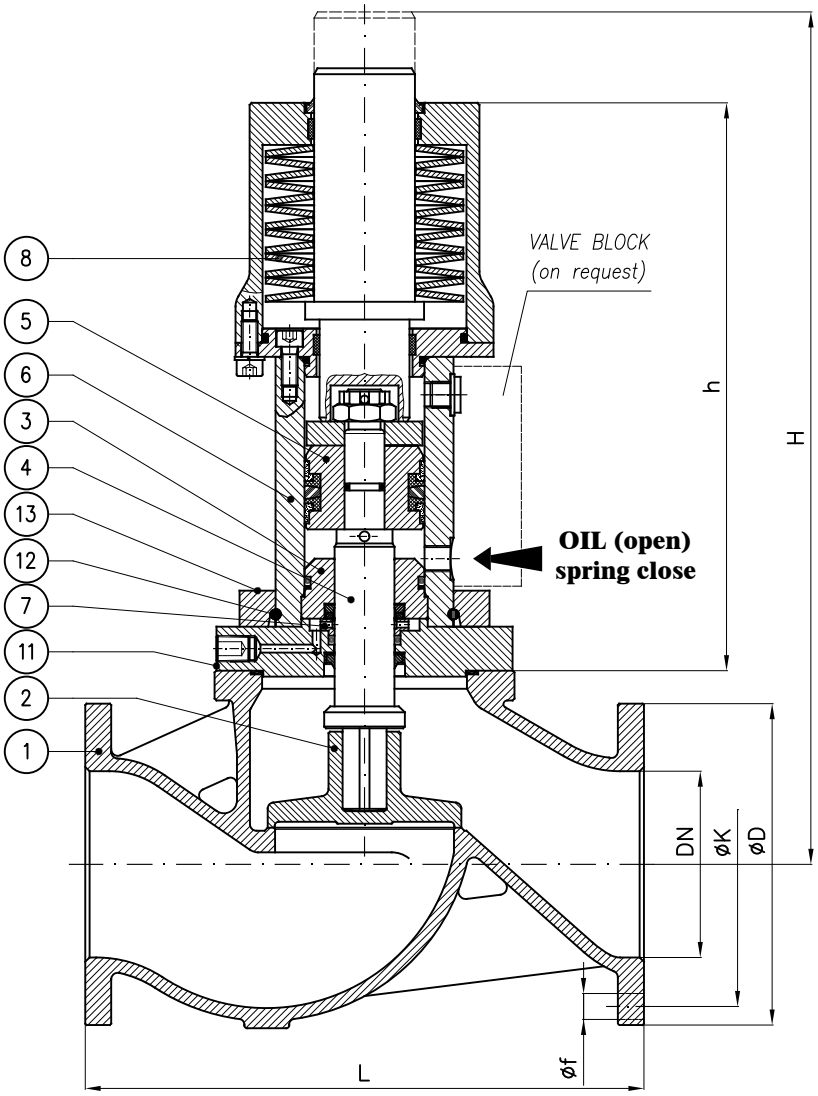

N.B.: Il dimensionamento e quindi anche l'ingombro dell'attuatore è funzione dei seguenti dati che devono sempre essere forniti:

- Pressione esercizio della valvola
- pressione olio all'attuatore
- Servizio

Note.: The size and so the overall dimension of the actuator depends by the following informations that should always be provided:

- *Valve's working pressure*
- *Oil pressure to actuator*
- *Service*

DN	h (~)	H (~)	L	øD	K	f	Holes NO. f	Weight (Kg)
32	305	410	180	120	90	14	4	
40	305	410	200	130	100	14	4	
50	295	410	230	140	110	14	4	
65	285	430	290	160	130	14	4	
80	335	485	310	190	150	18	4	
100	320	495	350	210	170	18	4	
125	420	620	400	240	200	18	8	
150	485	710	480	265	225	18	8	
200	485	780	600	320	280	18	8	
250	565	830	730	375	335	18	12	

Combinazione materiali standard – Standard materials Combination

ITEM	DENOMINAZIONE DENOMINATION	B/316 MATERIALE MATERIAL	B/B MATERIALE MATERIAL
01	Body	Bronze UNI EN1982 G-CuSn5Zn5Pb5	Bronze UNI EN1982 G-CuSn5Zn5Pb5
02	Disc (≤ DN80)	Stainless steel AISI316 UNI EN10088	Bronze UNI EN1982 G-CuSn5Zn5Pb5
02	Disc (≥ DN100)	Cast steel GP240-GH UNI EN10213 plus AISI316 facing welding	Bronze UNI EN1982 G-CuSn5Zn5Pb5
03	Inner head flange	Cast iron UNI EN1561 EN-GJL-250	Cast iron UNI EN1561 EN-GJL-250
04	Stem	Stainless steel AISI316 UNI EN10088	Stainless steel AISI316 UNI EN10088
05	Piston	Steel 9SMnPb28 UNI EN10087	Steel 9SMnPb28 UNI EN10087
06	Housing assembly	Fe52.2 GALVANIZED	Fe52.2 GALVANIZED
07	Back rod	Steel 9SMnPb28 UNI EN10087	Steel 9SMnPb28 UNI EN10087
08	Disk spring	Steel UNI EN10270	Steel UNI EN10270
09	Proximity switch	CEED BG12/2PF2 PNP CEOM E2FX2E2G NPN	CEED BG12/2PF2 PNP CEOM E2FX2E2G NPN
10	Indicator washer	Steel 9SMnPb28 UNI EN10087	Steel 9SMnPb28 UNI EN10087
11	Flange	Bronze UNI EN1982	Bronze UNI EN1982
12	Snap ring ø5	Stainless steel AISI316 UNI EN10088	Stainless steel AISI316 UNI EN10088
13	Collar	Fe52.2 GALVANIZED	Fe52.2 GALVANIZED
14	Shield	Stainless steel AISI316 UNI EN10088	Stainless steel AISI316 UNI EN10088

Nota: Combinazioni materiali non standard a richiesta
Note: Non standard materials combinations on request

Valvole a globo PN6 con attuatore idraulico semplice effetto normalmente aperto (FO)

Globe valves NP6 with hydraulic single acting actuator fail open (FO)

Tab.122B-SR-FO

(Ex Tab. 129/1-SR-FO)

Conform to:
UNI EN1092
DIN 3202

Esecuzione 01
con otturatore Com.

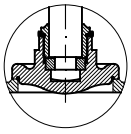

Execution 01
with SDSL disc

Esecuzione 02
con otturatore Aut.

Execution 02
with SDNR disc

con Proximity limit switch (a richiesta)
with Proximity limit switch (on request)

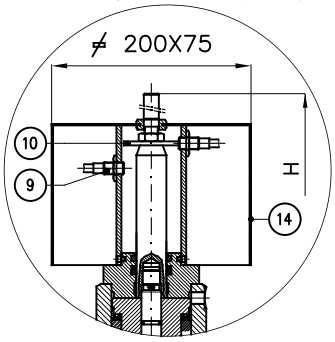

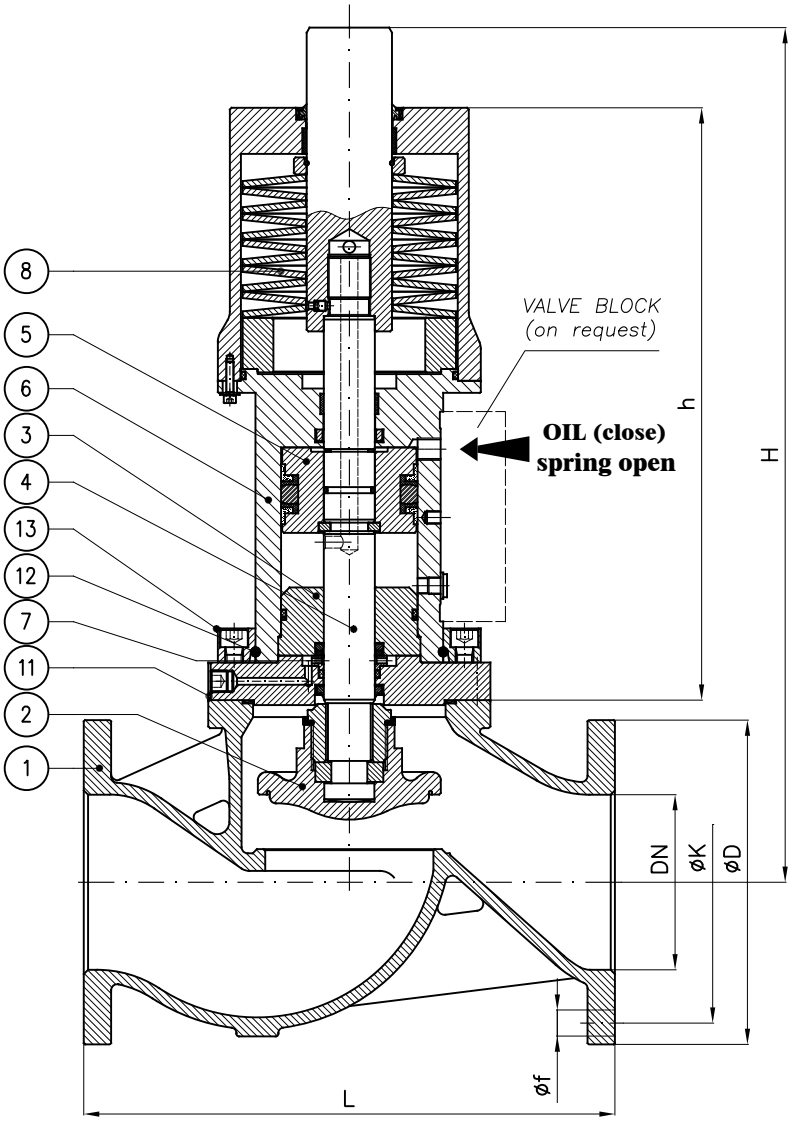

N.B.: Il dimensionamento e quindi anche l'ingombro dell'attuatore è funzione dei seguenti dati che devono sempre essere forniti:

- Pressione esercizio della valvola
- pressione olio all'attuatore
- Servizio

Note.: The size and so the overall dimension of the actuator depends by the following informations that should always be provided:

- *Valve's working pressure*
- *Oil pressure to actuator*
- *Service*

DN	h (~)	H (~)	L	øD	K	f	Holes NO. f	Weight (Kg)
32	305	410	180	120	90	14	4	
40	305	410	200	130	100	14	4	
50	295	410	230	140	110	14	4	
65	285	430	290	160	130	14	4	
80	335	485	310	190	150	18	4	
100	320	495	350	210	170	18	4	
125	420	620	400	240	200	18	8	
150	485	710	480	265	225	18	8	
200	485	780	600	320	280	18	8	
250	565	830	730	375	335	18	12	

Combinazione materiali standard – Standard materials Combination			
		B/316	B/B
ITEM	DENOMINAZIONE DENOMINATION	MATERIALE MATERIAL	MATERIALE MATERIAL
01	Body	Bronze UNI EN1982 G-CuSn5Zn5Pb5	Bronze UNI EN1982 G-CuSn5Zn5Pb5
02	Disc (≤ DN80)	Stainless steel AISI316 UNI EN10088	Bronze UNI EN1982 G-CuSn5Zn5Pb5
02	Disc (≥ DN100)	Cast steel GP240-GH UNI EN10213 plus AISI316 facing welding	Bronze UNI EN1982 G-CuSn5Zn5Pb5
03	Inner head flange	Cast iron UNI EN1561 EN-GJL-250	Cast iron UNI EN1561 EN-GJL-250
04	Stem	Stainless steel AISI316 UNI EN10088	Stainless steel AISI316 UNI EN10088
05	Piston	Steel 9SMnPb28 UNI EN10087	Steel 9SMnPb28 UNI EN10087
06	Housing assembly	Fe52.2 GALVANIZED	Fe52.2 GALVANIZED
07	Back rod	Steel 9SMnPb28 UNI EN10087	Steel 9SMnPb28 UNI EN10087
08	Disk spring	Steel UNI EN10270	Steel UNI EN10270
09	Proximity switch	CEED BG12/2PF2 PNP CEOM E2FX2E2G NPN	CEED BG12/2PF2 PNP CEOM E2FX2E2G NPN
10	Indicator washer	Steel 9SMnPb28 UNI EN10087	Steel 9SMnPb28 UNI EN10087
11	Flange	Bronze UNI EN1982	Bronze UNI EN1982
12	Snap ring ø5	Stainless steel AISI316 UNI EN10088	Stainless steel AISI316 UNI EN10088
13	Collar	Fe52.2 GALVANIZED	Fe52.2 GALVANIZED
14	Shield	Stainless steel AISI316 UNI EN10088	Stainless steel AISI316 UNI EN10088
Nota: Combinazioni materiali non standard a richiesta Note: Non standard materials combinations on request			

Valvole a via diritta - serie pesante PN6
Globe valves straight type - heavy class NP6

Tab.122G

Conform to:
UNI EN1092
DIN 3202

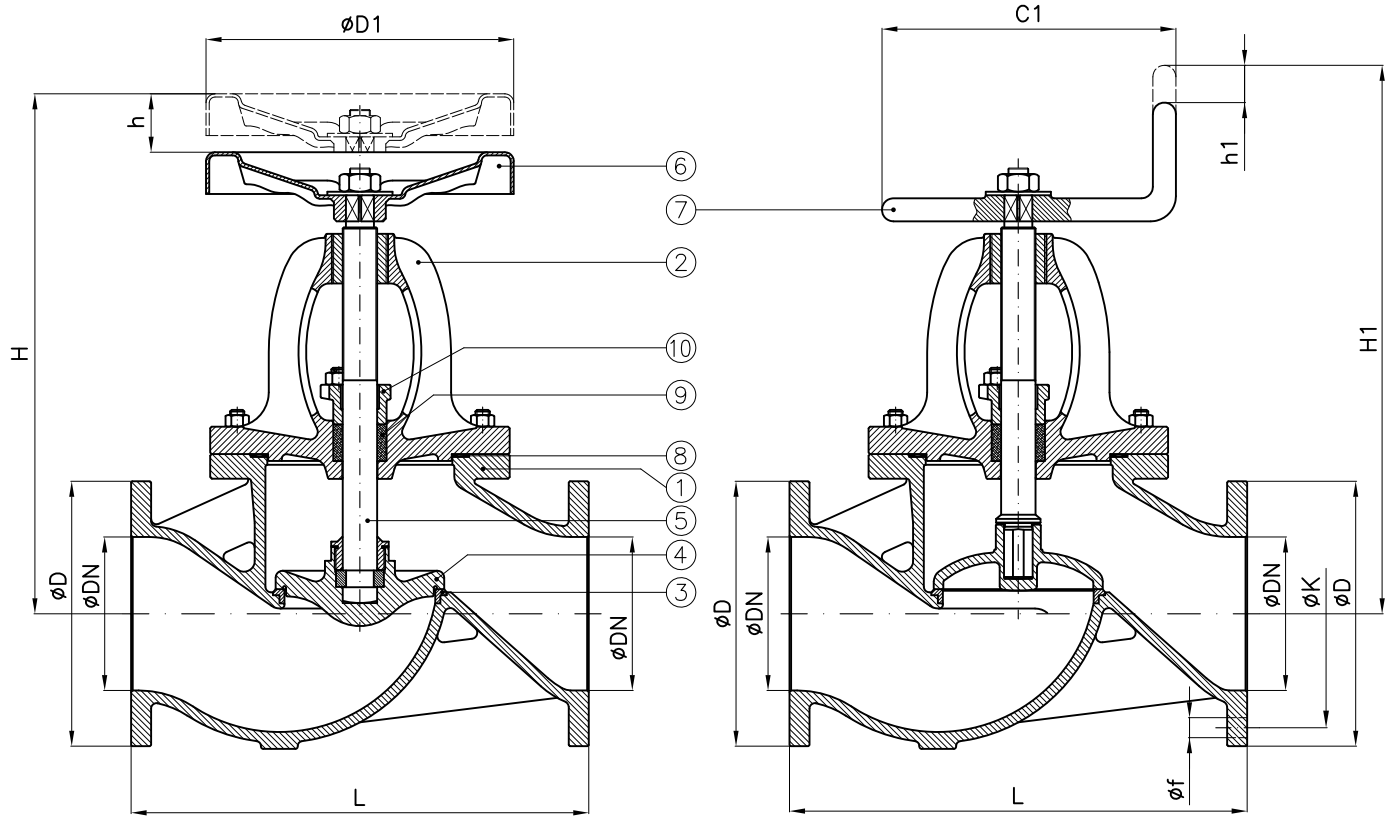

Tab.122.1G PN6	
comandata (SDSL) with fixed disc (SDSL)	UNI 3411 UNAV 8407

Tab.122.2G PN6	
semiautomatica (SDNR) with loose disc (SDNR)	UNI 3415 UNAV 8420

DN	C1	D1	H SDSL (~)	h SDSL	H1 SDNR (~)	h1 SDNR	L	D	K	f	Holes NO. f	Weight (Kg)
40	125	125	260	20	285	12	200	130	100	14	4	10
50	125	125	275	24	300	14	230	140	110	14	4	13
65	175	175	335	32	360	18	290	160	130	14	4	21
80	175	175	345	35	370	20	310	190	150	18	4	28
100	200	200	405	45	415	28	350	210	170	18	4	40
125	225	225	450	54	455	32	400	240	200	18	8	53
150	225	300	490	62	505	38	480	265	225	18	8	70
175	250	400	540	74	560	45	550	295	255	18	8	92
200	250	400	600	82	610	50	600	320	280	18	8	118
250	300	500	720	100	710	66	730	375	335	18	12	183
300	425	575	820	118	820	85	850	440	395	22	12	252
350	500		920	135	970	90	980	490	445	22	12	366
400	575		1100	135	1150	100	1100	540	495	22	16	554
450	650		1200	160	1250	115	1300	595	550	22	16	
500			1350	180	1400	130	1500	645	600	22	20	
600			1550	215	1600	160	1800	755	705	26	20	

Combinazione materiali standard – Standard materials Combination			
		G/316	G/B
ITEM	DENOMINAZIONE DENOMINATION	MATERIALE MATERIAL	MATERIALE MATERIAL
01	Body	Cast iron UNI EN1561 EN-GJL-250	Cast iron UNI EN1561 EN-GJL-250
02	Bonnet	Cast iron UNI EN1561 EN-GJL-250	Cast iron UNI EN1561 EN-GJL-250
03	Body seat	Stainless steel AISI316 UNI EN10088	Stainless steel AISI316 UNI EN10088
04	Disc (≤ DN80)	Stainless steel AISI316 UNI EN10088	Bronze UNI EN1982 G-CuSn5Zn5Pb5
04	Disc (≥ DN100)	Cast steel GP240-GH UNI EN10213 plus AISI316 facing welding	Bronze UNI EN1982 G-CuSn5Zn5Pb5
05	Stem	Stainless steel AISI316 UNI EN10088	Brass CW617N (OT58)
06	Handwheel	Sheet of carbon steel	Sheet of carbon steel
07	Handle	Steel A37 UNI EN10217-1	Steel A37 UNI EN10217-1
08	Gasket	Planiflex KG carbo/C PF81	Planiflex KG carbo/C PF81
09	Packing	Carbograph GR8800	Carbograph GR8800
10	Gland bushing	Bronze UNI EN1982 G-CuSn5Zn5Pb5	Bronze UNI EN1982 G-CuSn5Zn5Pb5
Nota: Combinazioni materiali non standard a richiesta Note: Non standard materials combinations on request			

Valvole a globo PN6 con attuatore idraulico doppio effetto
Globe valves NP6 with hydraulic double acting actuator

Tab.122G-DA

Conform to:
UNI EN1092
DIN 3202

Esecuzione 01
con otturatore Com.

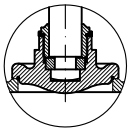

Execution 01
with SDSL disc

Esecuzione 02
con otturatore Aut.

Execution 02
with SDNR disc

con Proximity limit switch (a richiesta)
with Proximity limit switch (on request)

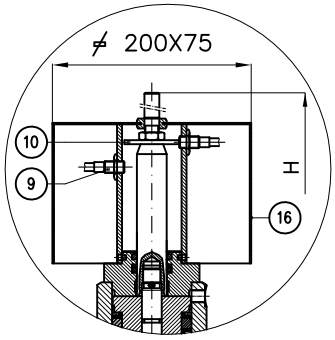

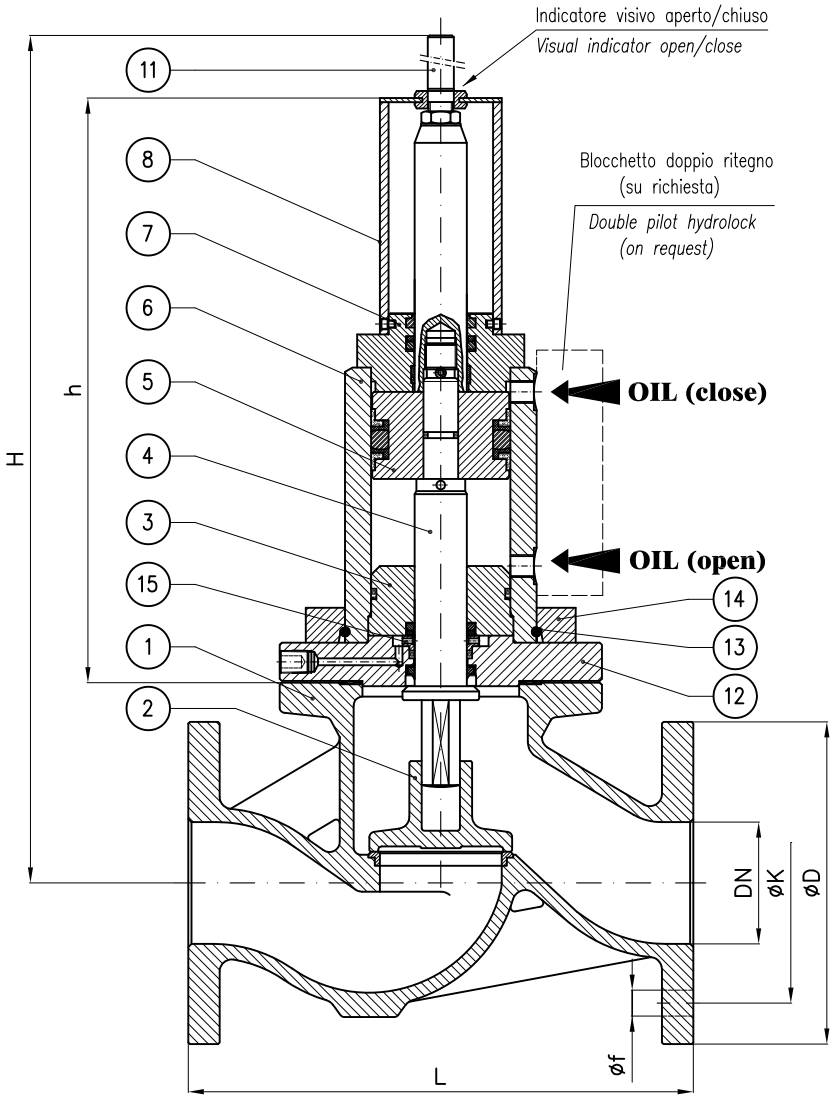

N.B.: Il dimensionamento e quindi anche l'ingombro dell'attuatore è funzione dei seguenti dati che devono sempre essere forniti:

- Pressione esercizio della valvola
- pressione olio all'attuatore
- Servizio

Note.: The size and so the overall dimension of the actuator depends by the following informations that should always be provided:

- *Valve's working pressure*
- *Oil pressure to actuator*
- *Service*

DN	h (~)	H (~)	L	øD	K	f	Holes NO. f	Weight (Kg)
20	210	280	150	90	65	11	4	
25	210	290	160	100	75	11	4	
32	335	440	180	120	90	14	4	
40	335	445	200	130	100	14	4	
50	320	445	230	140	110	14	4	
65	315	475	290	160	130	14	4	
80	340	490	310	190	150	18	4	
100	340	515	350	210	170	18	4	
125	360	565	400	240	200	18	8	
150	360	585	480	265	225	18	8	
200	440	760	600	320	280	18	8	
250	440	780	730	375	335	18	12	
300	525	975	850	440	395	22	12	

Combinazione materiali standard – Standard materials Combination			
		G/316	G/B
ITEM	DENOMINAZIONE DENOMINATION	MATERIALE MATERIAL	MATERIALE MATERIAL
01	Body	Cast iron UNI EN1561 EN-GJL-250	Cast iron UNI EN1561 EN-GJL-250
02	Disc (≤ DN80)	Stainless steel AISI316 UNI EN10088	Bronze UNI EN1982 G-CuSn5Zn5Pb5
02	Disc (≥ DN100)	Cast steel GP240-GH UNI EN10213 plus AISI316 facing welding	Bronze UNI EN1982 G-CuSn5Zn5Pb5
03	Inner head flange	Cast iron UNI EN1561 EN-GJL-250	Cast iron UNI EN1561 EN-GJL-250
04	Stem	Stainless steel AISI316 UNI EN10088	Stainless steel AISI316 UNI EN10088
05	Piston	Steel 9SMnPb28 UNI EN10087	Steel 9SMnPb28 UNI EN10087
06	Housing welded assembly	Fe52.2 GALVANIZED	Fe52.2 GALVANIZED
07	Head flange	Steel UNI C40	Steel UNI C40
08	Proximity switch support	Fe37 GALVANIZED	Fe37 GALVANIZED
09	Proximity switch	CEED BG12/2PF2 PNP CEOM E2FX2E2G NPN	CEED BG12/2PF2 PNP CEOM E2FX2E2G NPN
10	Indicator washer	Steel 9SMnPb28 UNI EN10087	Steel 9SMnPb28 UNI EN10087
11	Index open/close	Brass CW617N (OT58)	Brass CW617N (OT58)
12	Flange	Steel UNI C40	Steel UNI C40
13	Snap ring ø5	Stainless steel AISI316 UNI EN10088	Stainless steel AISI316 UNI EN10088
14	Collar	Fe52.2 GALVANIZED	Fe52.2 GALVANIZED
15	Back rod	Steel 9SMnPb28 UNI EN10087	Steel 9SMnPb28 UNI EN10087
16	Shield	Stainless steel AISI316 UNI EN10088	Stainless steel AISI316 UNI EN10088
Nota: Combinazioni materiali non standard a richiesta **Note: Non standard materials combinations on request**			

Valvole a globo PN6 con attuatore idraulico semplice effetto normalmente chiuso (FC)

Globe valves NP6 with hydraulic single acting actuator fail close (FC)

Tab.122G-SR-FC

Conform to:
UNI EN1092
DIN 3202

Esecuzione 01
con otturatore Com.

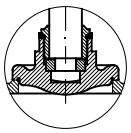

Execution 01
with SDSL disc

Esecuzione 02
con otturatore Aut.

Execution 02
with SDNR disc

con Proximity limit switch (a richiesta)
with Proximity limit switch (on request)

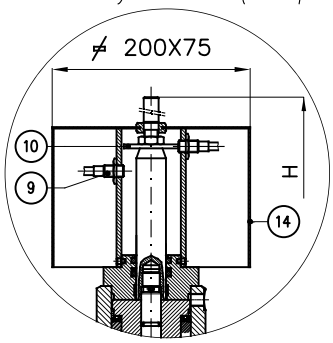

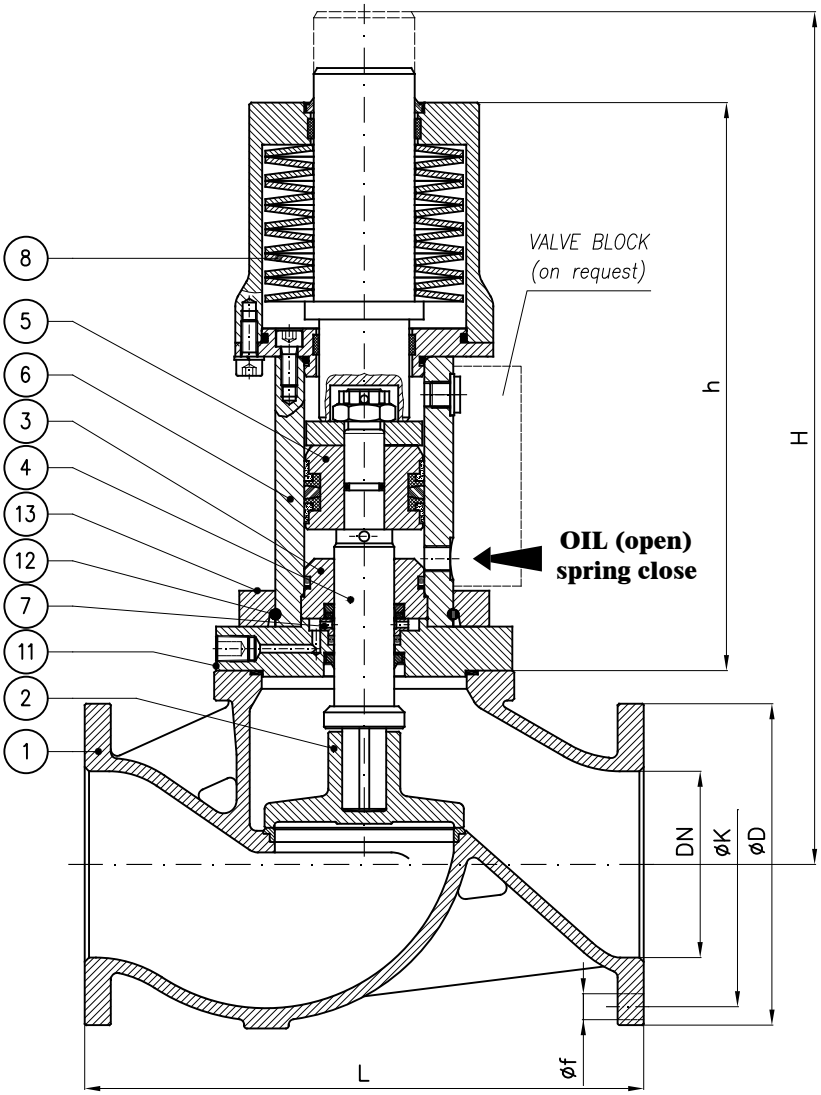

N.B.: Il dimensionamento e quindi anche l'ingombro dell'attuatore è funzione dei seguenti dati che devono sempre essere forniti:

- Pressione esercizio della valvola
- pressione olio all'attuatore
- Servizio

Note.: The size and so the overall dimension of the actuator depends by the following informations that should always be provided:

- *Valve's working pressure*
- *Oil pressure to actuator*
- *Service*

DN	h (~)	H (~)	L	øD	K	f	Holes NO. f	Weight (Kg)
32	305	410	180	120	90	14	4	
40	305	410	200	130	100	14	4	
50	295	410	230	140	110	14	4	
65	285	430	290	160	130	14	4	
80	335	485	310	190	150	18	4	
100	320	495	350	210	170	18	4	
125	420	620	400	240	200	18	8	
150	485	710	480	265	225	18	8	
200	485	780	600	320	280	18	8	
250	565	830	730	375	335	18	12	

Combinazione materiali standard – Standard materials Combination			
		G/316	G/B
ITEM	DENOMINAZIONE DENOMINATION	MATERIALE MATERIAL	MATERIALE MATERIAL
01	Body	Cast iron UNI EN1561 EN-GJL-250	Cast iron UNI EN1561 EN-GJL-250
02	Disc (≤ DN80)	Stainless steel AISI316 UNI EN10088	Bronze UNI EN1982 G-CuSn5Zn5Pb5
02	Disc (≥ DN100)	Cast steel GP240-GH UNI EN10213 plus AISI316 facing welding	Bronze UNI EN1982 G-CuSn5Zn5Pb5
03	Inner head flange	Cast iron UNI EN1561 EN-GJL-250	Cast iron UNI EN1561 EN-GJL-250
04	Stem	Stainless steel AISI316 UNI EN10088	Stainless steel AISI316 UNI EN10088
05	Piston	Steel 9SMnPb28 UNI EN10087	Steel 9SMnPb28 UNI EN10087
06	Housing assembly	Fe52.2 GALVANIZED	Fe52.2 GALVANIZED
07	Back rod	Steel 9SMnPb28 UNI EN10087	Steel 9SMnPb28 UNI EN10087
08	Disk spring	Steel UNI EN10270	Steel UNI EN10270
09	Proximity switch	CEED BG12/2PF2 PNP CEOM E2FX2E2G NPN	CEED BG12/2PF2 PNP CEOM E2FX2E2G NPN
10	Indicator washer	Steel 9SMnPb28 UNI EN10087	Steel 9SMnPb28 UNI EN10087
11	Flange	Steel UNI C40	Steel UNI C40
12	Snap ring ø5	Stainless steel AISI316 UNI EN10088	Stainless steel AISI316 UNI EN10088
13	Collar	Fe52.2 GALVANIZED	Fe52.2 GALVANIZED
14	Shield	Stainless steel AISI316 UNI EN10088	Stainless steel AISI316 UNI EN10088
Nota: Combinazioni materiali non standard a richiesta Note: Non standard materials combinations on request			

Valvole a globo PN6 con attuatore idraulico semplice effetto normalmente aperto (FO)

Globe valves NP6 with hydraulic single acting actuator fail open (FO)

Tab.122G-SR-FO

Conform to:
UNI EN1092
DIN 3202

Esecuzione 01
con otturatore Com.

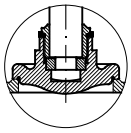

Execution 01
with SDSL disc

Esecuzione 02
con otturatore Aut.

Execution 02
with SDNR disc

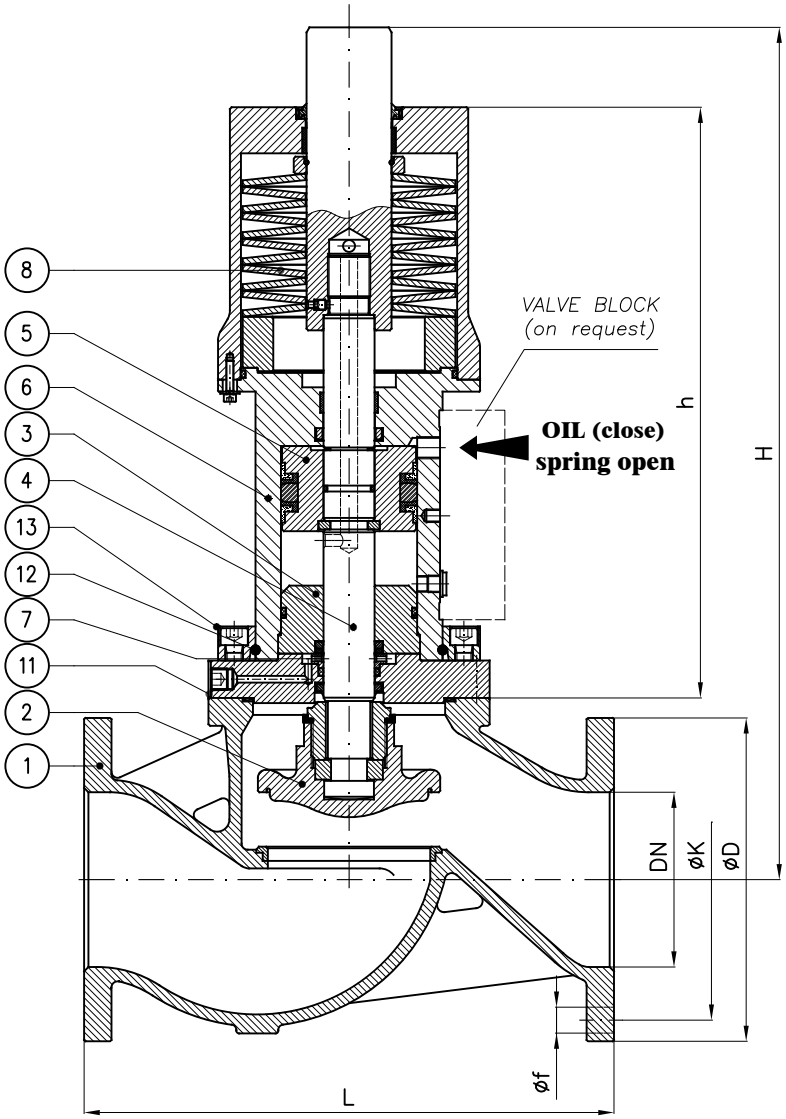

con Proximity limit switch (a richiesta)
with Proximity limit switch (on request)

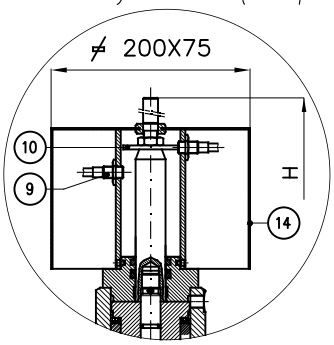

N.B.: Il dimensionamento e quindi anche l'ingombro dell'attuatore è funzione dei seguenti dati che devono sempre essere forniti:

- Pressione esercizio della valvola
- pressione olio all'attuatore
- Servizio

Note.: The size and so the overall dimension of the actuator depends by the following informations that should always be provided:

- *Valve's working pressure*
- *Oil pressure to actuator*
- *Service*

DN	h (~)	H (~)	L	øD	K	f	Holes NO. f	Weight (Kg)
32	305	410	180	120	90	14	4	
40	305	410	200	130	100	14	4	
50	295	410	230	140	110	14	4	
65	285	430	290	160	130	14	4	
80	335	485	310	190	150	18	4	
100	320	495	350	210	170	18	4	
125	420	620	400	240	200	18	8	
150	485	710	480	265	225	18	8	
200	485	780	600	320	280	18	8	
250	565	830	730	375	335	18	12	

Combinazione materiali standard – Standard materials Combination			
		G/316	G/B
ITEM	DENOMINAZIONE DENOMINATION	MATERIALE MATERIAL	MATERIALE MATERIAL
01	Body	Cast iron UNI EN1561 EN-GJL-250	Cast iron UNI EN1561 EN-GJL-250
02	Disc (≤ DN80)	Stainless steel AISI316 UNI EN10088	Bronze UNI EN1982 G-CuSn5Zn5Pb5
02	Disc (≥ DN100)	Cast steel GP240-GH UNI EN10213 plus AISI316 facing welding	Bronze UNI EN1982 G-CuSn5Zn5Pb5
03	Inner head flange	Cast iron UNI EN1561 EN-GJL-250	Cast iron UNI EN1561 EN-GJL-250
04	Stem	Stainless steel AISI316 UNI EN10088	Stainless steel AISI316 UNI EN10088
05	Piston	Steel 9SMnPb28 UNI EN10087	Steel 9SMnPb28 UNI EN10087
06	Housing assembly	Fe52.2 GALVANIZED	Fe52.2 GALVANIZED
07	Back rod	Steel 9SMnPb28 UNI EN10087	Steel 9SMnPb28 UNI EN10087
08	Disk spring	Steel UNI EN10270	Steel UNI EN10270
09	Proximity switch	CEED BG12/2PF2 PNP CEOM E2FX2E2G NPN	CEED BG12/2PF2 PNP CEOM E2FX2E2G NPN
10	Indicator washer	Steel 9SMnPb28 UNI EN10087	Steel 9SMnPb28 UNI EN10087
11	Flange	Steel UNI C40	Steel UNI C40
12	Snap ring ø5	Stainless steel AISI316 UNI EN10088	Stainless steel AISI316 UNI EN10088
13	Collar	Fe52.2 GALVANIZED	Fe52.2 GALVANIZED
14	Shield	Stainless steel AISI316 UNI EN10088	Stainless steel AISI316 UNI EN10088
Nota: Combinazioni materiali non standard a richiesta Note: Non standard materials combinations on request			

Valvole a via diritta - serie pesante PN6
Globe valves straight type - heavy class NP6

Tab.122GS

Conform to:
UNI EN1092
DIN 3202

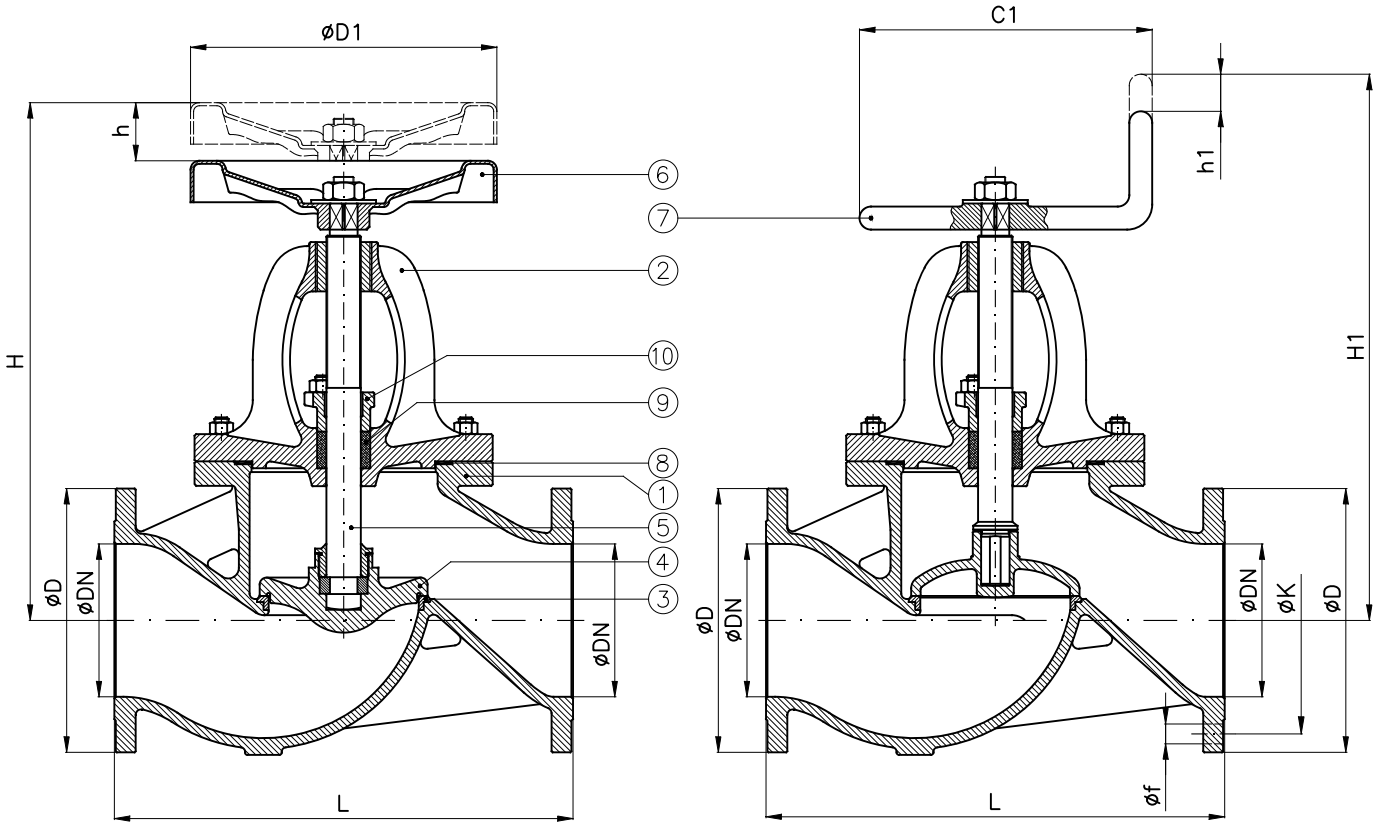

Tab.122.1GS PN6	
comandata (SDSL) with fixed disc (SDSL)	UNI 3411 UNAV 8407 NE 401130

Tab.122.2GS PN6	
semiautomatica (SDNR) with loose disc (SDNR)	UNI 3415 UNAV 8420 NE 403130

DN	C1	D1	H SDSL (~)	h SDSL	H1 SDNR (~)	h1 SDNR	L	D	K	f	Holes NO. f	Weight (Kg)
40	125	125	260	20	285	12	200	130	100	14	4	10
50	125	125	275	24	300	14	230	140	110	14	4	13
65	175	175	335	32	360	18	290	160	130	14	4	21
80	175	175	345	35	370	20	310	190	150	18	4	27
100	200	200	405	45	415	28	350	210	170	18	4	40
125	225	225	450	54	455	32	400	240	200	18	8	52
150	225	300	490	62	505	38	480	265	225	18	8	70
175	250	400	540	74	560	45	550	295	255	18	8	92
200	250	400	600	82	610	50	600	320	280	18	8	118
250	300	500	720	100	710	66	730	375	335	18	12	168
300	425	575	820	118	820	85	850	440	395	22	12	250
350	500		920	135	970	90	980	490	445	22	12	370
400	575		1100	135	1150	100	1100	540	495	22	16	554
450	650		1200	160	1250	115	1300	595	550	22	16	
500			1350	180	1400	130	1500	645	600	22	20	
600			1550	215	1600	160	1800	755	705	26	20	

Combinazione materiali standard – Standard materials Combination			
		GS/316	GS/B
ITEM	DENOMINAZIONE DENOMINATION	MATERIALE MATERIAL	MATERIALE MATERIAL
01	Body	Nodular cast iron EN-GJS-400-15U UNI EN1563	Nodular cast iron EN-GJS-400-15U UNI EN1563
02	Bonnet	Nodular cast iron EN-GJS-400-15U UNI EN1563	Nodular cast iron EN-GJS-400-15U UNI EN1563
03	Body seat	Stainless steel AISI316 UNI EN10088	Stainless steel AISI316 UNI EN10088
04	Disc (≤ DN80)	Stainless steel AISI316 UNI EN10088	Bronze UNI EN1982 G-CuSn5Zn5Pb5
04	Disc (≥ DN100)	Cast steel GP240-GH UNI EN10213 plus AISI316 facing welding	Bronze UNI EN1982 G-CuSn5Zn5Pb5
05	Stem	Stainless steel AISI316 UNI EN10088	Brass CW617N (OT58)
06	Handwheel	Sheet of carbon steel	Sheet of carbon steel
07	Handle	Steel A37 UNI EN10217-1	Steel A37 UNI EN10217-1
08	Gasket	Planiflex KG carbo/C PF81	Planiflex KG carbo/C PF81
09	Packing	Carbograph GR8800	Carbograph GR8800
10	Gland bushing	Bronze UNI EN1982 G-CuSn5Zn5Pb5	Bronze UNI EN1982 G-CuSn5Zn5Pb5
Nota: Combinazioni materiali non standard a richiesta Note: Non standard materials combinations on request			

Valvole a globo PN6 con attuatore idraulico doppio effetto
Globe valves NP6 with hydraulic double acting actuator

Tab.122GS-DA

(Ex Tab. 129/1-DA)

Conform to:
UNI EN1092
DIN 3202

Esecuzione 01
con otturatore Com.

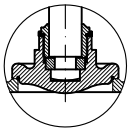

Execution 01
with SDSL disc

Esecuzione 02
con otturatore Aut.

Execution 02
with SDNR disc

con Proximity limit switch (a richiesta)
with Proximity limit switch (on request)

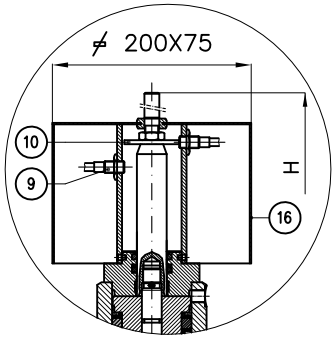

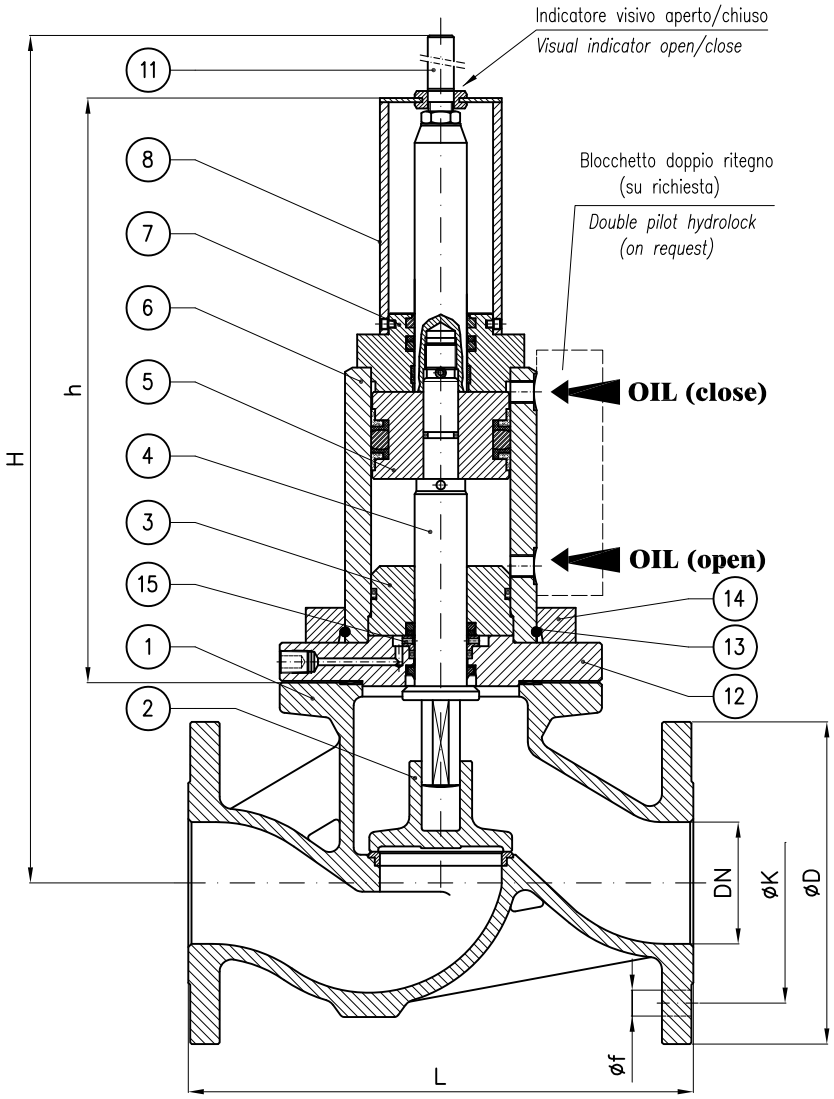

N.B.: Il dimensionamento e quindi anche l'ingombro dell'attuatore è funzione dei seguenti dati che devono sempre essere forniti:

- Pressione esercizio della valvola
- pressione olio all'attuatore
- Servizio

Note.: The size and so the overall dimension of the actuator depends by the following informations that should always be provided:

- *Valve's working pressure*
- *Oil pressure to actuator*
- *Service*

DN	h (~)	H (~)	L	øD	K	f	Holes NO. f	Weight (Kg)
20	210	280	150	90	65	11	4	
25	210	290	160	100	75	11	4	
32	335	440	180	120	90	14	4	
40	335	445	200	130	100	14	4	
50	320	445	230	140	110	14	4	
65	315	475	290	160	130	14	4	
80	340	490	310	190	150	18	4	
100	340	515	350	210	170	18	4	
125	360	565	400	240	200	18	8	
150	360	585	480	265	225	18	8	
200	440	760	600	320	280	18	8	
250	440	780	730	375	335	18	12	
300	525	975	850	440	395	22	12	

Combinazione materiali standard – Standard materials Combination			
		GS/316	GS/B
ITEM	DENOMINAZIONE DENOMINATION	MATERIALE MATERIAL	MATERIALE MATERIAL
01	Body	Nodular cast iron EN-GJS-400-15U UNI EN1563	Nodular cast iron EN-GJS-400-15U UNI EN1563
02	Disc (≤ DN80)	Stainless steel AISI316 UNI EN10088	Bronze UNI EN1982 G-CuSn5Zn5Pb5
02	Disc (≥ DN100)	Cast steel GP240-GH UNI EN10213 plus AISI316 facing welding	Bronze UNI EN1982 G-CuSn5Zn5Pb5
03	Inner head flange	Cast iron UNI EN1561 EN-GJL-250	Cast iron UNI EN1561 EN-GJL-250
04	Stem	Stainless steel AISI316 UNI EN10088	Stainless steel AISI316 UNI EN10088
05	Piston	Steel 9SMnPb28 UNI EN10087	Steel 9SMnPb28 UNI EN10087
06	Housing welded assembly	Fe52.2 GALVANIZED	Fe52.2 GALVANIZED
07	Head flange	Steel UNI C40	Steel UNI C40
08	Proximity switch support	Fe37 GALVANIZED	Fe37 GALVANIZED
09	Proximity switch	CEED BG12/2PF2 PNP CEOM E2FX2E2G NPN	CEED BG12/2PF2 PNP CEOM E2FX2E2G NPN
10	Indicator washer	Steel 9SMnPb28 UNI EN10087	Steel 9SMnPb28 UNI EN10087
11	Index open/close	Brass CW617N (OT58)	Brass CW617N (OT58)
12	Flange	Steel UNI C40	Steel UNI C40
13	Snap ring ø5	Stainless steel AISI316 UNI EN10088	Stainless steel AISI316 UNI EN10088
14	Collar	Fe52.2 GALVANIZED	Fe52.2 GALVANIZED
15	Back rod	Steel 9SMnPb28 UNI EN10087	Steel 9SMnPb28 UNI EN10087
16	Shield	Stainless steel AISI316 UNI EN10088	Stainless steel AISI316 UNI EN10088
Nota: Combinazioni materiali non standard a richiesta Note: Non standard materials combinations on request			

Valvole ad globo PN6 con attuatore idraulico semplice effetto normalmente chiuso (FC)

Globe valves NP6 with hydraulic single acting actuator fail close (FC)

Tab.122GS-SR-FC

(Ex Tab. 129/1-SR-FC)

Conform to:
UNI EN1092
DIN 3202

Esecuzione 01
con otturatore Com.

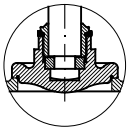

Execution 01
with SDSL disc

Esecuzione 02
con otturatore Aut.

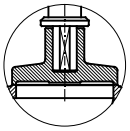

Execution 02
with SDNR disc

con Proximity limit switch (a richiesta)
with Proximity limit switch (on request)

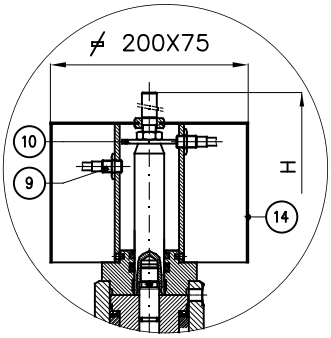

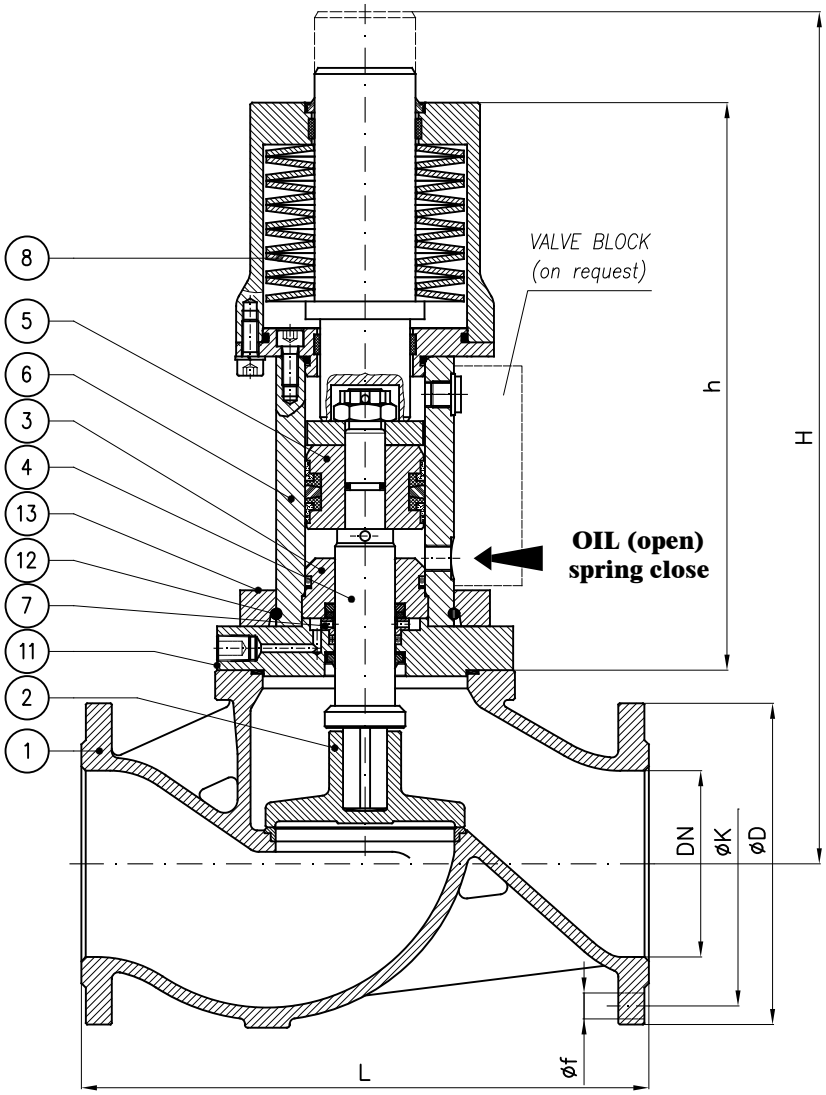

N.B.: Il dimensionamento e quindi anche l'ingombro dell'attuatore è funzione dei seguenti dati che devono sempre essere forniti:

- Pressione esercizio della valvola
- pressione olio all'attuatore
- Servizio

Note.: The size and so the overall dimension of the actuator depends by the following informations that should always be provided:

- *Valve's working pressure*
- *Oil pressure to actuator*
- *Service*

DN	h (~)	H (~)	L	øD	K	f	Holes NO. f	Weight (Kg)
32	305	410	180	120	90	14	4	
40	305	410	200	130	100	14	4	
50	295	410	230	140	110	14	4	
65	285	430	290	160	130	14	4	
80	335	485	310	190	150	18	4	
100	320	495	350	210	170	18	4	
125	420	620	400	240	200	18	8	
150	485	710	480	265	225	18	8	
200	485	780	600	320	280	18	8	
250	565	830	730	375	335	18	12	

Combinazione materiali standard – Standard materials Combination			
		GS/316	GS/B
ITEM	DENOMINAZIONE DENOMINATION	MATERIALE MATERIAL	MATERIALE MATERIAL
01	Body	Nodular cast iron EN-GJS-400-15U UNI EN1563	Nodular cast iron EN-GJS-400-15U UNI EN1563
02	Disc (≤ DN80)	Stainless steel AISI316 UNI EN10088	Bronze UNI EN1982 G-CuSn5Zn5Pb5
02	Disc (≥ DN100)	Cast steel GP240-GH UNI EN10213 plus AISI316 facing welding	Bronze UNI EN1982 G-CuSn5Zn5Pb5
03	Inner head flange	Cast iron UNI EN1561 EN-GJL-250	Cast iron UNI EN1561 EN-GJL-250
04	Stem	Stainless steel AISI316 UNI EN10088	Stainless steel AISI316 UNI EN10088
05	Piston	Steel 9SMnPb28 UNI EN10087	Steel 9SMnPb28 UNI EN10087
06	Housing assembly	Fe52.2 GALVANIZED	Fe52.2 GALVANIZED
07	Back rod	Steel 9SMnPb28 UNI EN10087	Steel 9SMnPb28 UNI EN10087
08	Disk spring	Steel UNI EN10270	Steel UNI EN10270
09	Proximity switch	CEED BG12/2PF2 PNP CEOM E2FX2E2G NPN	CEED BG12/2PF2 PNP CEOM E2FX2E2G NPN
10	Indicator washer	Steel 9SMnPb28 UNI EN10087	Steel 9SMnPb28 UNI EN10087
11	Flange	Steel UNI C40	Steel UNI C40
12	Snap ring ø5	Stainless steel AISI316 UNI EN10088	Stainless steel AISI316 UNI EN10088
13	Collar	Fe52.2 GALVANIZED	Fe52.2 GALVANIZED
14	Shield	Stainless steel AISI316 UNI EN10088	Stainless steel AISI316 UNI EN10088
Nota: Combinazioni materiali non standard a richiesta Note: Non standard materials combinations on request			

Valvole a globo PN6 con attuatore idraulico semplice effetto normalmente aperto (FO)

Globe valves NP6 with hydraulic single acting actuator fail open (FO)

Tab.122GS-SR-FO

(Ex Tab. 129/1-SR-FO)

Conform to:
UNI EN1092
DIN 3202

Esecuzione 01
con otturatore Com.

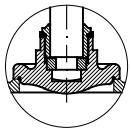

Execution 01
with SDSL disc

Esecuzione 02
con otturatore Aut.

Execution 02
with SDNR disc

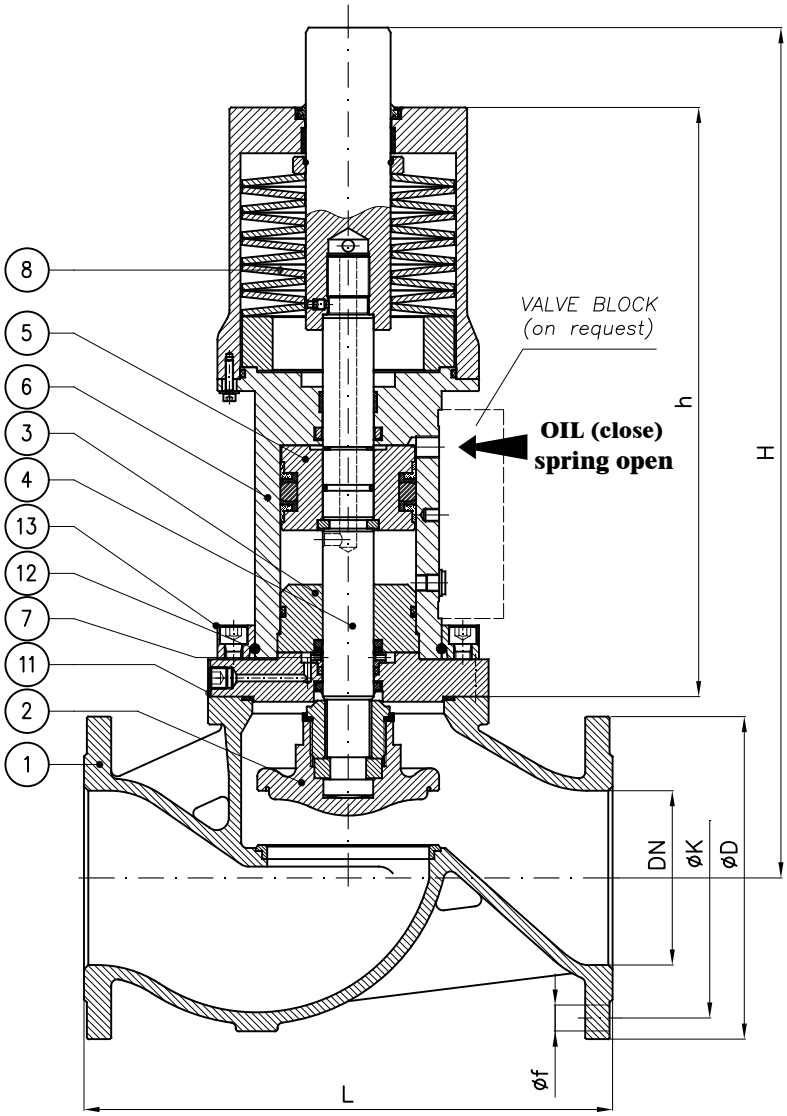

con Proximity limit switch (a richiesta)
with Proximity limit switch (on request)

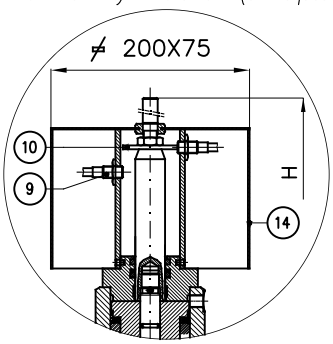

N.B.: Il dimensionamento e quindi anche l'ingombro dell'attuatore è funzione dei seguenti dati che devono sempre essere forniti:

- Pressione esercizio della valvola
- pressione olio all'attuatore
- Servizio

Note.: The size and so the overall dimension of the actuator depends by the following informations that should always be provided:

- *Valve's working pressure*
- *Oil pressure to actuator*
- *Service*

DN	h (~)	H (~)	L	øD	K	f	Holes NO. f	Weight (Kg)
32	305	410	180	120	90	14	4	
40	305	410	200	130	100	14	4	
50	295	410	230	140	110	14	4	
65	285	430	290	160	130	14	4	
80	335	485	310	190	150	18	4	
100	320	495	350	210	170	18	4	
125	420	620	400	240	200	18	8	
150	485	710	480	265	225	18	8	
200	485	780	600	320	280	18	8	
250	565	830	730	375	335	18	12	

Combinazione materiali standard – Standard materials Combination

ITEM	DENOMINAZIONE DENOMINATION	GS/316 MATERIALE MATERIAL	GS/B MATERIALE MATERIAL
01	Body	Nodular cast iron EN-GJS-400-15U UNI EN1563	Nodular cast iron EN-GJS-400-15U UNI EN1563
02	Disc (≤ DN80)	Stainless steel AISI316 UNI EN10088	Bronze UNI EN1982 G-CuSn5Zn5Pb5
02	Disc (≥ DN100)	Cast steel GP240-GH UNI EN10213 plus AISI316 facing welding	Bronze UNI EN1982 G-CuSn5Zn5Pb5
03	Inner head flange	Cast iron UNI EN1561 EN-GJL-250	Cast iron UNI EN1561 EN-GJL-250
04	Stem	Stainless steel AISI316 UNI EN10088	Stainless steel AISI316 UNI EN10088
05	Piston	Steel 9SMnPb28 UNI EN10087	Steel 9SMnPb28 UNI EN10087
06	Housing assembly	Fe52.2 GALVANIZED	Fe52.2 GALVANIZED
07	Back rod	Steel 9SMnPb28 UNI EN10087	Steel 9SMnPb28 UNI EN10087
08	Disk spring	Steel UNI EN10270	Steel UNI EN10270
09	Proximity switch	CEED BG12/2PF2 PNP CEOM E2FX2E2G NPN	CEED BG12/2PF2 PNP CEOM E2FX2E2G NPN
10	Indicator washer	Steel 9SMnPb28 UNI EN10087	Steel 9SMnPb28 UNI EN10087
11	Flange	Steel UNI C40	Steel UNI C40
12	Snap ring ø5	Stainless steel AISI316 UNI EN10088	Stainless steel AISI316 UNI EN10088
13	Collar	Fe52.2 GALVANIZED	Fe52.2 GALVANIZED
14	Shield	Stainless steel AISI316 UNI EN10088	Stainless steel AISI316 UNI EN10088

Nota: Combinazioni materiali non standard a richiesta
Note: Non standard materials combinations on request

Valvole a via diritta - serie pesante PN16-10DIN
Globe valves straight type - heavy class NP16-10DIN

Tab.124A

Conform to:
UNI EN1092
DIN 3202

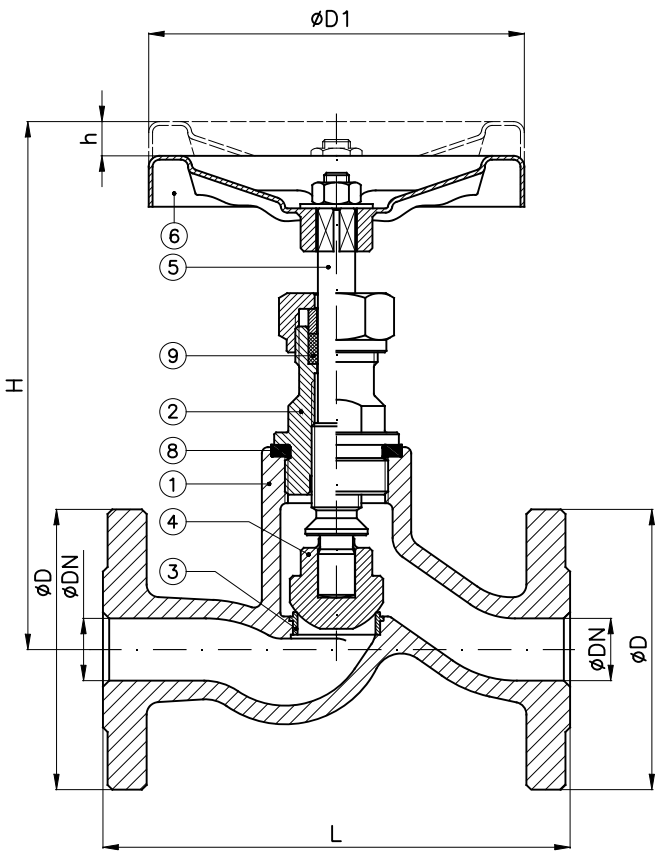

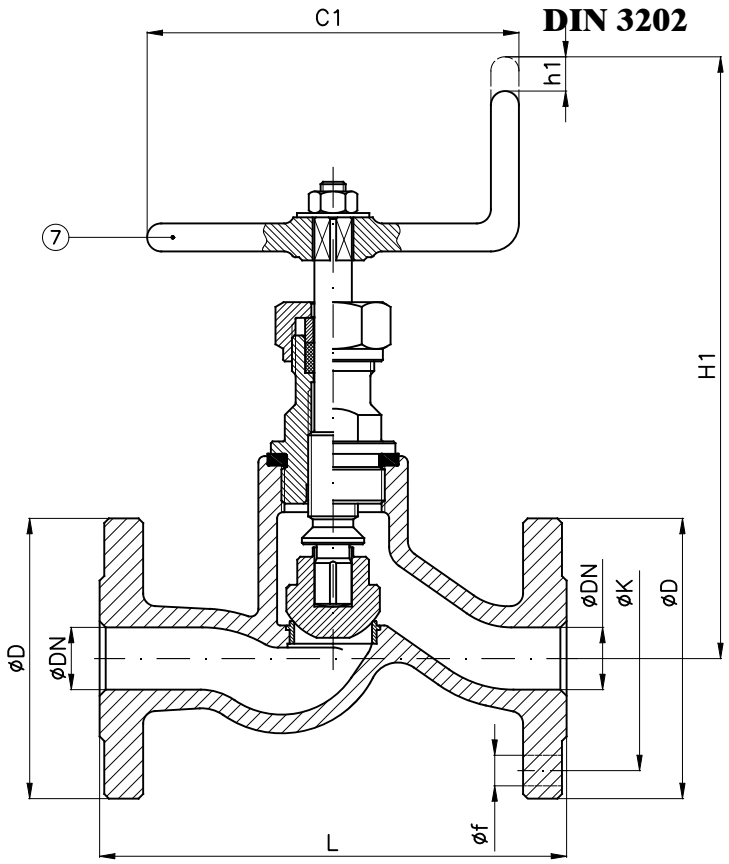

Tab.124.1A PN16-10DIN	
comandata (SDSL) with fixed disc (SDSL)	UNI 3410 UNAV 8440

Tab.124.2A PN16-10DIN	
semiautomatica (SDNR) with loose disc (SDNR)	UNI 3414 UNAV 8442

DN	C1	D1	H SDSL (~)	h SDSL	H1 SDNR (~)	h1 SDNR	L	D	K	f	Holes NO. f	Weight (Kg)
15	100	100	175	10	205	10	150	95	65	14	4	2
20	100	100	175	10	205	10	150	105	75	14	4	2.3
25	100	100	175	10	205	10	160	115	85	14	4	3
32	125	125	210	13	240	13	180	140	100	18	4	5

Combinazione materiali standard – Standard materials Combination				
		A/316	A/B	CF8M/316
ITEM	DENOMINAZIONE DENOMINATION	MATERIALE MATERIAL	MATERIALE MATERIAL	MATERIALE MATERIAL
01	Body	Cast steel GP240-GH UNI EN10213	Cast steel GP240-GH UNI EN10213	Stainless steel CF8M ASTM A351
02	Bonnet	Carbon steel GE240 UNI EN10293	Carbon steel GE240 UNI EN10293	Stainless steel AISI316 UNI EN10088
03	Body seat	Stainless steel AISI316 UNI EN10088	Stainless steel AISI316 UNI EN10088	Stainless steel AISI316 UNI EN10088
04	Disc	Stainless steel AISI316 UNI EN10088	Bronze UNI EN1982 G-CuSn5Zn5Pb5	Stainless steel AISI316 UNI EN10088
05	Stem	Stainless steel AISI316 UNI EN10088	Brass CW617N (OT58)	Stainless steel AISI316 UNI EN10088
06	Handwheel	Sheet of carbon steel	Sheet of carbon steel	Sheet of carbon steel
07	Handle	Steel A37 UNI EN10217-1	Steel A37 UNI EN10217-1	Steel A37 UNI EN10217-1
08	Gasket	Planiflex KG carbo/C PF81	Planiflex KG carbo/C PF81	Planiflex KG carbo/C PF81
09	Packing	Carbograph GR8800	Carbograph GR8800	Carbograph GR8800

Nota: Combinazioni materiali non standard a richiesta
Note: Non standard materials combinations on request

Valvole a via diritta - serie pesante PN16-10DIN
Globe valves straight type - heavy class NP16-10DIN

Tab.124B

Conform to:
UNI EN1092
DIN 3202

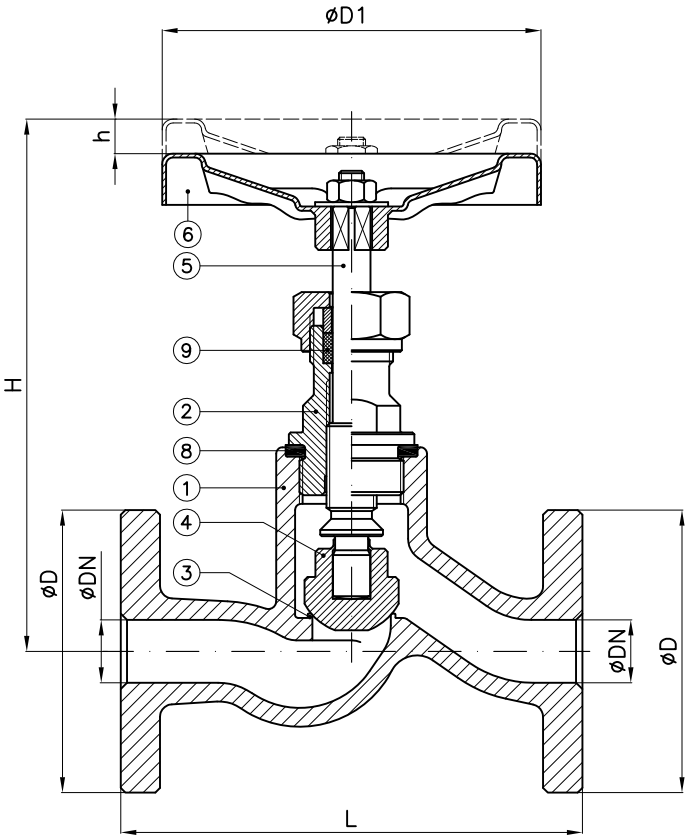

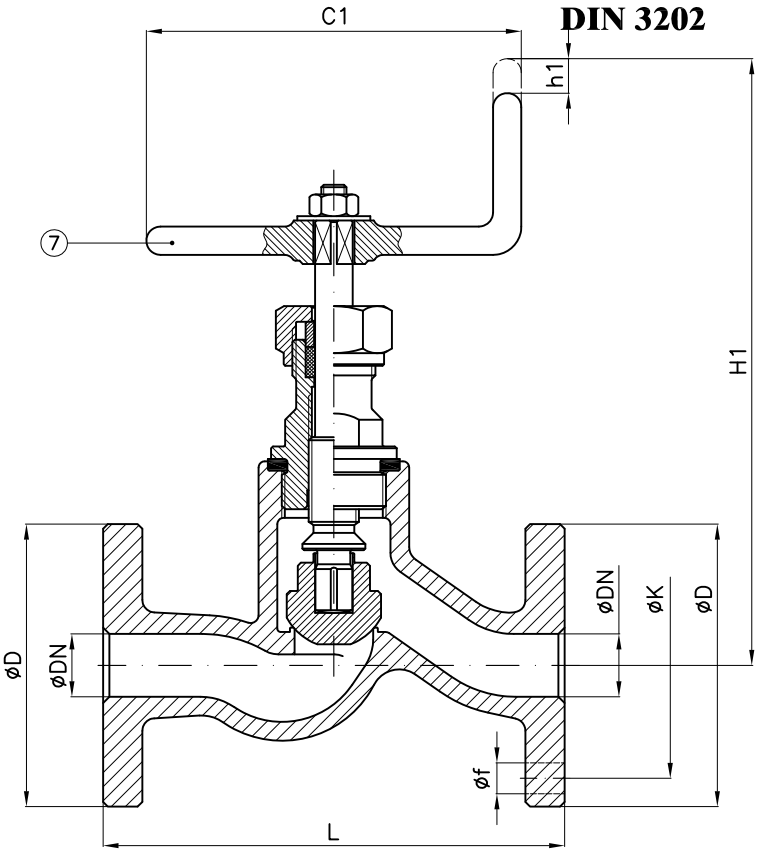

Tab.124.1B PN16-10DIN	
comandata (SDSL) with fixed disc (SDSL)	UNI 3410 UNAV 8440

Tab.124.2B PN16-10DIN	
semiautomatica (SDNR) with loose disc (SDNR)	UNI 3414 UNAV 8442

DN	C1	D1	H SDSL (~)	h SDSL	H1 SDNR (~)	h1 SDNR	L	D	K	f	Holes NO. f	Weight (Kg)
15	100	100	170	10	200	10	150	95	65	14	4	3.5
20	100	100	170	10	200	10	150	105	75	14	4	4
25	100	100	180	10	210	10	160	115	85	14	4	4
32	125	125	200	13	230	13	180	140	100	18	4	7

Combinazione materiali standard – Standard materials Combination			
		B/316	B/B
ITEM	DENOMINAZIONE DENOMINATION	MATERIALE MATERIAL	MATERIALE MATERIAL
01	Body	Bronze UNI EN1982 G-CuSn5Zn5Pb5	Bronze UNI EN1982 G-CuSn5Zn5Pb5
02	Bonnet	Bronze UNI EN1982 G-CuSn5Zn5Pb5	Bronze UNI EN1982 G-CuSn5Zn5Pb5
03	Integral body seat	Bronze UNI EN1982 G-CuSn5Zn5Pb5	Bronze UNI EN1982 G-CuSn5Zn5Pb5
04	Disc	Stainless steel AISI316 UNI EN10088	Bronze UNI EN1982 G-CuSn5Zn5Pb5
05	Stem	Stainless steel AISI316 UNI EN10088	Brass CW617N (OT58)
06	Handwheel	Sheet of carbon steel	Sheet of carbon steel
07	Handle	Steel A37 UNI EN10217-1	Steel A37 UNI EN10217-1
08	Gasket	Planiflex KG carbo/C PF81	Planiflex KG carbo/C PF81
09	Packing	Carbograph GR8800	Carbograph GR8800
Nota: Combinazioni materiali non standard a richiesta Note: Non standard materials combinations on request			

Valvole a via diritta - serie pesante PN16-10DIN
Globe valves straight type - heavy class NP16-10DIN

Tab.124G

Conform to:
UNI EN1092
DIN 3202

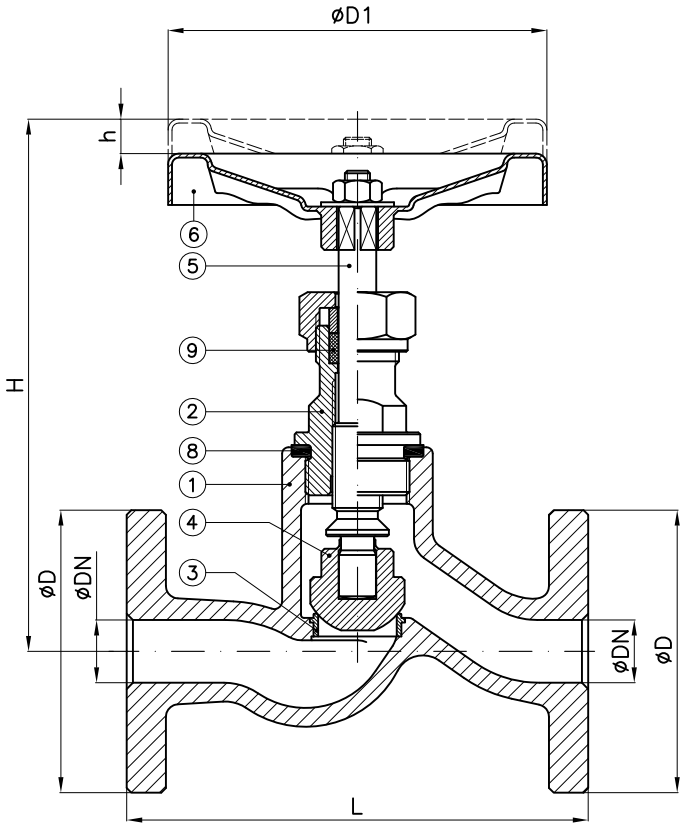

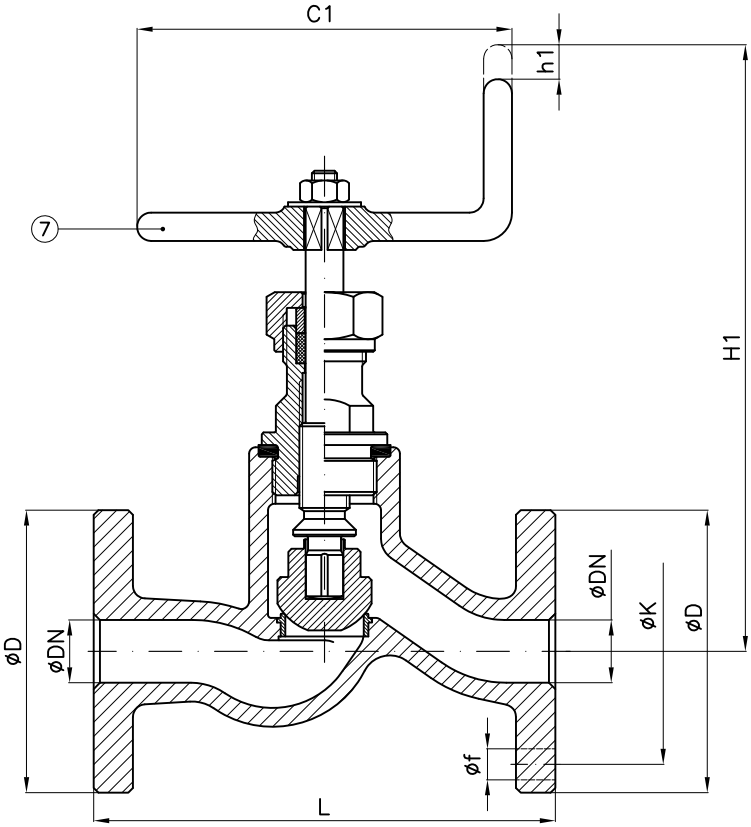

Tab.124.1G PN16-10DIN	
comandata (SDSL) with fixed disc (SDSL)	UNI 3410 UNAV 8440

Tab.124.2G PN16-10DIN	
semiautomatica (SDNR) with loose disc (SDNR)	UNI 3414 UNAV 8442

DN	C1	D1	H SDSL (~)	h SDSL	H1 SDNR (~)	h1 SDNR	L	D	K	f	Holes NO. f	Weight (Kg)
15	100	100	170	10	200	10	150	95	65	14	4	3
20	100	100	170	10	200	10	150	105	75	14	4	4
25	100	100	170	10	200	10	160	115	85	14	4	4.5
32	125	125	205	13	235	13	180	140	100	18	4	5

Combinazione materiali standard – Standard materials Combination			
		G/316	G/B
ITEM	DENOMINAZIONE DENOMINATION	MATERIALE MATERIAL	MATERIALE MATERIAL
01	Body	Cast iron UNI EN1561 EN-GJL-250	Cast iron UNI EN1561 EN-GJL-250
02	Bonnet	Carbon steel GE240 UNI EN10293	Carbon steel GE240 UNI EN10293
03	Body seat	Stainless steel AISI316 UNI EN10088	Stainless steel AISI316 UNI EN10088
04	Disc	Stainless steel AISI316 UNI EN10088	Bronze UNI EN1982 G-CuSn5Zn5Pb5
05	Stem	Stainless steel AISI316 UNI EN10088	Brass CW617N (OT58)
06	Handwheel	Sheet of carbon steel	Sheet of carbon steel
07	Handle	Steel A37 UNI EN10217-1	Steel A37 UNI EN10217-1
08	Gasket	Planiflex KG carbo/C PF81	Planiflex KG carbo/C PF81
09	Packing	Carbograph GR8800	Carbograph GR8800
Nota: Combinazioni materiali non standard a richiesta Note: Non standard materials combinations on request			

Valvole a via diritta - serie pesante PN16-10DIN
Globe valves straight type - heavy class NP16-10DIN

Tab.124GS

Conform to:
UNI EN1092
DIN 3202

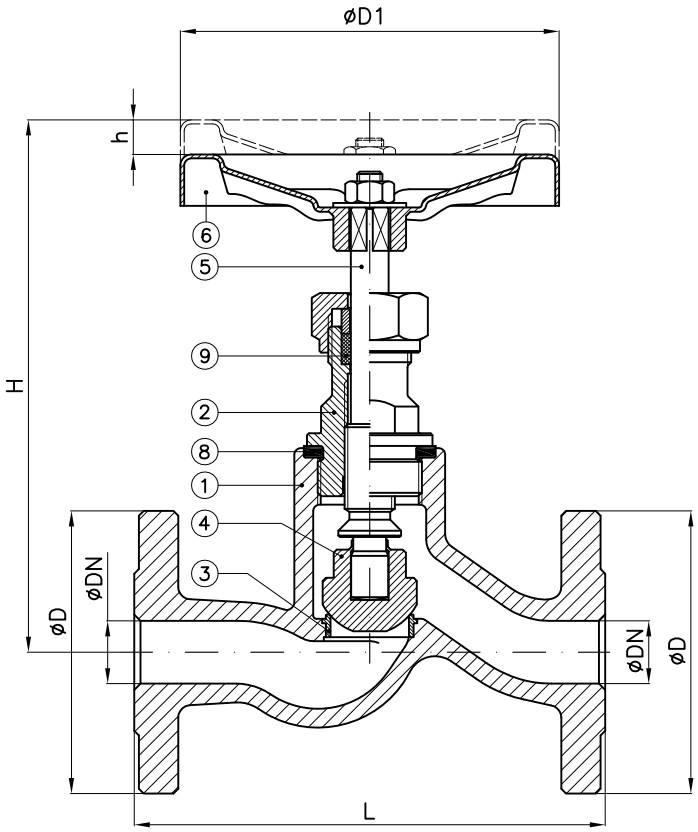

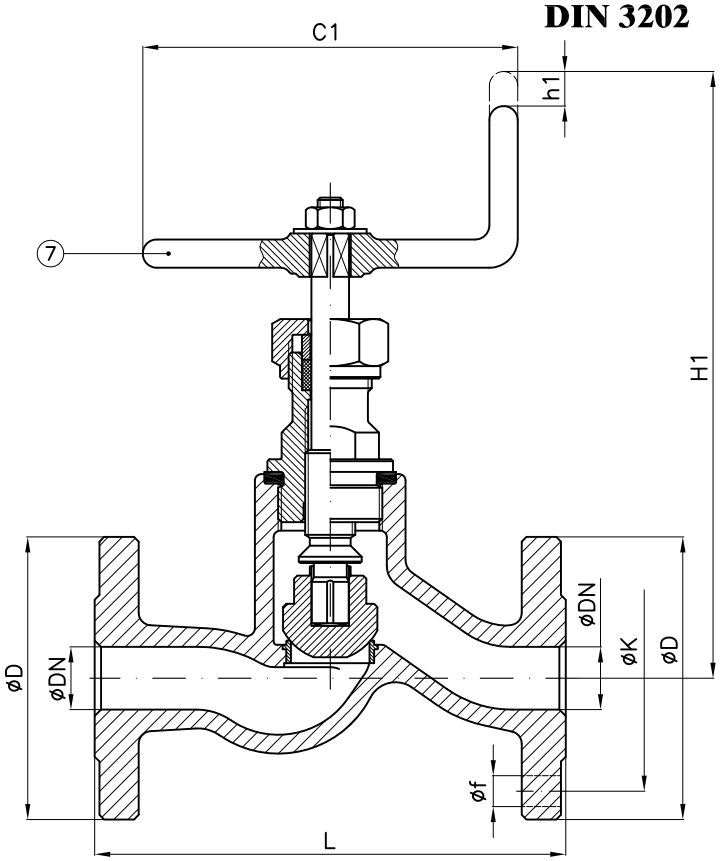

Tab.124.1GS PN16-10DIN	
comandata (SDSL) with fixed disc (SDSL)	UNI 3410 UNAV 8440 NS 401130

Tab.124.2GS PN16-10DIN	
semiautomatica (SDNR) with loose disc (SDNR)	UNI 3414 UNAV 8442 NS 403130

DN	C1	D1	H SDSL (~)	h SDSL	H1 SDNR (~)	h1 SDNR	L	D	K	f	Holes NO. f	Weight (Kg)
15	100	100	170	10	200	10	150	95	65	14	4	3
20	100	100	170	10	200	10	150	105	75	14	4	4
25	100	100	170	10	200	10	160	115	85	14	4	4.5
32	125	125	205	13	235	13	180	140	100	18	4	5

Combinazione materiali standard – Standard materials Combination			
		GS/316	GS/B
ITEM	DENOMINAZIONE DENOMINATION	MATERIALE MATERIAL	MATERIALE MATERIAL
01	Body	Nodular cast iron EN-GJS-400-15U UNI EN1563	Nodular cast iron EN-GJS-400-15U UNI EN1563
02	Bonnet	Carbon steel GE240 UNI EN10293	Carbon steel GE240 UNI EN10293
03	Body seat	Stainless steel AISI316 UNI EN10088	Stainless steel AISI316 UNI EN10088
04	Disc	Stainless steel AISI316 UNI EN10088	Bronze UNI EN1982 G-CuSn5Zn5Pb5
05	Stem	Stainless steel AISI316 UNI EN10088	Brass CW617N (OT58)
06	Handwheel	Sheet of carbon steel	Sheet of carbon steel
07	Handle	Steel A37 UNI EN10217-1	Steel A37 UNI EN10217-1
08	Gasket	Planiflex KG carbo/C PF81	Planiflex KG carbo/C PF81
09	Packing	Carbograph GR8800	Carbograph GR8800

Nota: Combinazioni materiali non standard a richiesta
Note: Non standard materials combinations on request

Valvole a via diritta - serie pesante PN10DIN-PN16
Globe valves straight type - heavy class NP10DIN-NP16

Tab.126A

Conform to:
UNI EN1092
DIN 3202

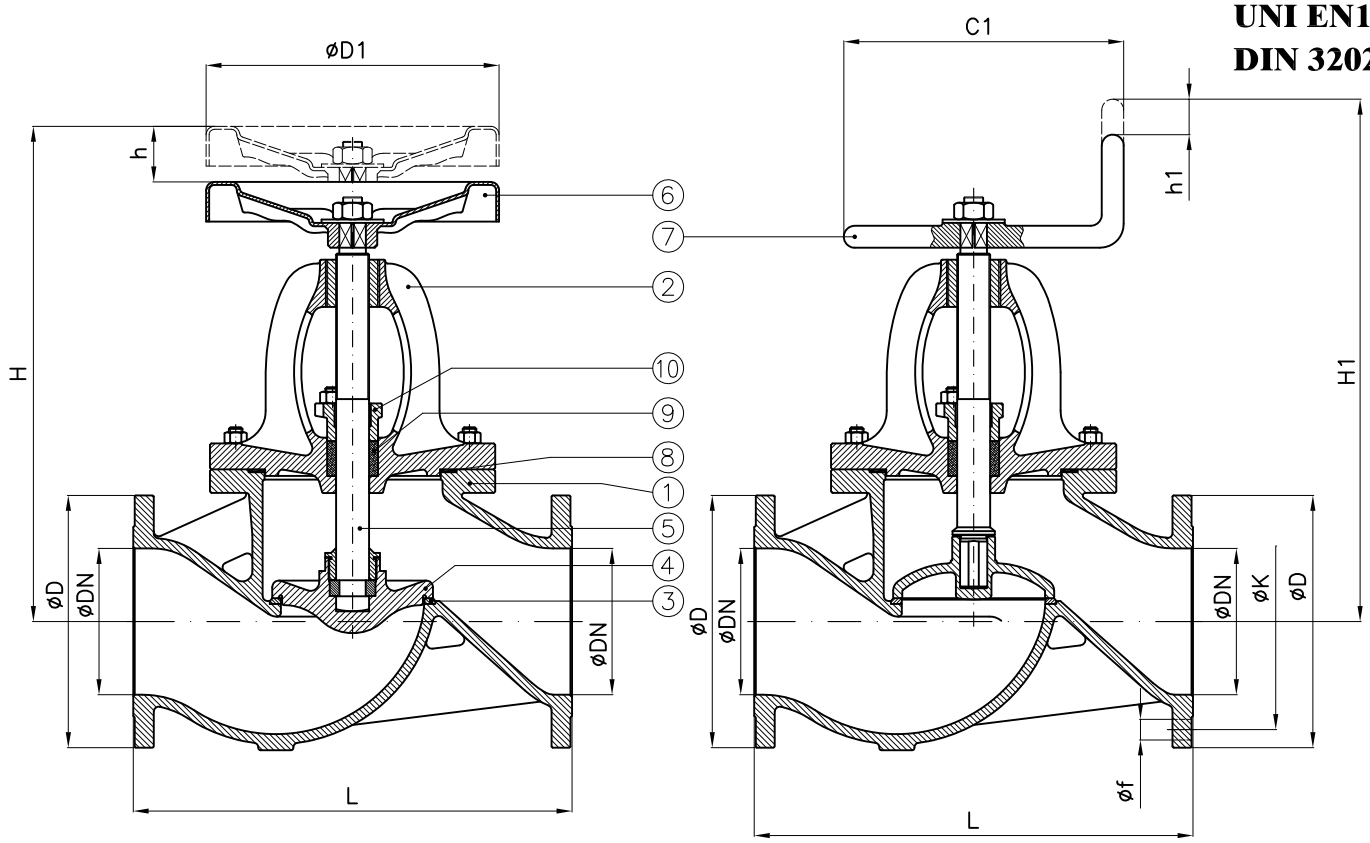

Tab.126A-SDSL TYPE	PN10DIN	PN16
comandata (SDSL) with fixed disc (SDSL)	-	UNAV 9828

Tab.126A-SDNR TYPE	PN10DIN	PN16
semiautomatica (SDNR) with loose disc (SDNR)	-	UNAV 9831

									PN10DIN				PN16			
DN	C1	D1	H SDSL (~)	h SDSL	H1 SDNR (~)	h1 SDNR	L	Weight (Kg)	D	K	f	Holes NO. f	D	K	f	Holes NO. f
15	100	100	220	12	245	8	130	5.5	95	65	14	4	95	65	14	4
20	100	100	220	12	245	8	150	6	105	75	14	4	105	75	14	4
25	100	100	240	14	265	9	160	7	115	85	14	4	115	85	14	4
32	125	125	255	17	280	10	180	10	140	100	18	4	140	100	18	4
40	125	125	270	20	290	12	200	12	150	110	18	4	150	110	18	4
50	125	125	285	24	305	14	230	15	165	125	18	4	165	125	18	4
65	175	175	350	32	370	18	290	21.5	185	145	18	4	185	145	18	4
80	175	175	365	35	380	20	310	26	200	160	18	8	200	160	18	8
100	200	200	420	45	425	28	350	39	220	180	18	8	220	180	18	8
125	225	225	500	54	505	32	400	70	250	210	18	8	250	210	18	8
150	225	300	575	62	575	38	480	86	285	240	22	8	285	240	22	8
175	250	400	580	74	595	45	550	115	315	270	22	8	315	270	22	8
200	250	400	680	82	715	50	600	154	340	295	22	8	340	295	22	12
250	300	500	755	100	775	66	730	260	395	350	22	12	405	355	26	12
300	425	575	860	118	815	85	850	302	445	400	22	12	460	410	26	12
350	500		920	130	970	90	980	418	505	460	22	16	520	470	26	16
400	575		1000	135	1020	100	1100	541	565	515	26	16	580	525	30	16
450	650		1250	160	1300	115	1300		615	565	26	20	640	585	30	20
500			1400	180	1450	130	1500		670	620	26	20	715	650	33	20
600			1600	215	1650	160	1800		780	725	30	20	840	770	36	20

Combinazione materiali standard – Standard materials Combination

		A/316	A/B	CF8M/316
ITEM	DENOMINAZIONE DENOMINATION	MATERIALE MATERIAL	MATERIALE MATERIAL	MATERIALE MATERIAL
01	Body	Cast steel GP240-GH UNI EN10213	Cast steel GP240-GH UNI EN10213	Stainless steel CF8M ASTM A351
02	Bonnet	Cast steel GP240-GH UNI EN10213	Cast steel GP240-GH UNI EN10213	Stainless steel CF8M ASTM A351
03	Body seat	Stainless steel AISI316 UNI EN10088	Stainless steel AISI316 UNI EN10088	Stainless steel AISI316 UNI EN10088
04	Disc (≤ DN80)	Stainless steel AISI316 UNI EN10088	Bronze UNI EN1982 G-CuSn5Zn5Pb5	Stainless steel AISI316 UNI EN10088
04	Disc (≥ DN100)	Cast steel GP240-GH UNI EN10213 plus AISI316 facing welding	Bronze UNI EN1982 G-CuSn5Zn5Pb5	Stainless steel CF8M ASTM A351
05	Stem	Stainless steel AISI316 UNI EN10088	Brass CW617N (OT58)	Stainless steel AISI316 UNI EN10088
06	Handwheel	Sheet of carbon steel	Sheet of carbon steel	Sheet of carbon steel
07	Handle	Steel A37 UNI EN10217-1	Steel A37 UNI EN10217-1	Steel A37 UNI EN10217-1
08	Gasket	Planiflex KG carbo/C PF81	Planiflex KG carbo/C PF81	Planiflex KG carbo/C PF81
09	Packing	Carbograph GR8800	Carbograph GR8800	Carbograph GR8800
10	Gland bushing	Steel Fe360B (S235JRC) UNI EN10025	Steel Fe360B (S235JRC) UNI EN10025	Stainless steel AISI316 UNI EN10088

Nota: Combinazioni materiali non standard a richiesta
Note: Non standard materials combinations on request

Valvole a globo PN10DIN-PN16 con attuatore idraulico doppio effetto
Globe valves NP10DIN-NP16 with hydraulic double acting actuator

Tab.126A-DA

(Ex Tab. 129/1-DA)

Conform to:
UNI EN1092
DIN 3202

Esecuzione 01
con otturatore Com.

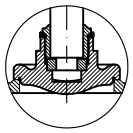

Execution 01
with SDSL disc

Esecuzione 02
con otturatore Aut.

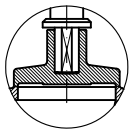

Execution 02
with SDNR disc

con Proximity limit switch (a richiesta)
with Proximity limit switch (on request)

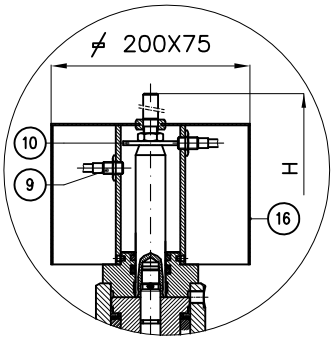

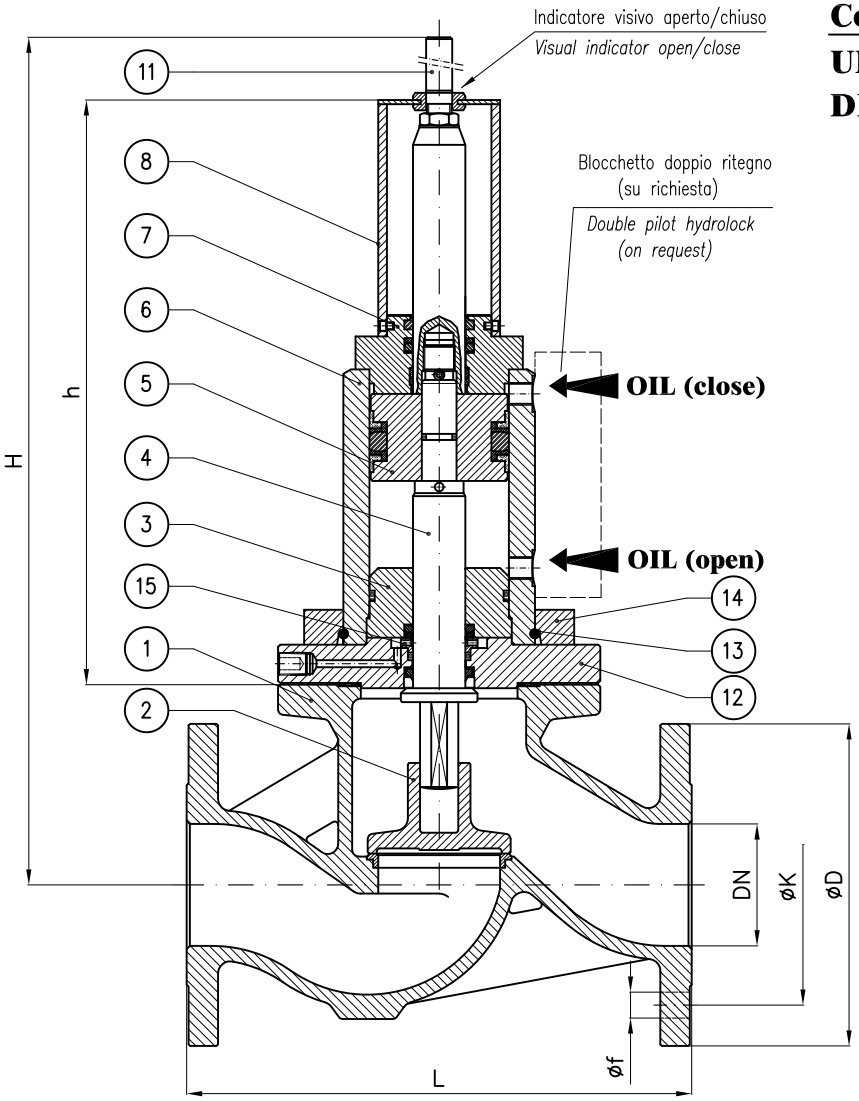

N.B.: Il dimensionamento e quindi anche l'ingombro dell'attuatore è funzione dei seguenti dati che devono sempre essere forniti:

- Pressione esercizio della valvola
- pressione olio all'attuatore
- Servizio

Note.: The size and so the overall dimension of the actuator depends by the following informations that should always be provided:

- *Valve's working pressure*
- *Oil pressure to actuator*
- *Service*

					PN10DIN				PN16			
DN	h (~)	H (~)	L	Weight (Kg)	øD	K	f	Holes NO. f	øD	K	f	Holes NO. f
20	210	280	150		105	75	14	4	105	75	14	4
25	210	290	160		115	85	14	4	115	85	14	4
32	335	440	180		140	100	18	4	140	100	18	4
40	335	445	200		150	110	18	4	150	110	18	4
50	320	445	230		165	125	18	4	165	125	18	4
65	315	475	290		185	145	18	4	185	145	18	4
80	340	490	310		200	160	18	8	200	160	18	8
100	340	515	350		220	180	18	8	220	180	18	8
125	360	565	400		250	210	18	8	250	210	18	8
150	360	585	480		285	240	22	8	285	240	22	8
200	440	760	600		340	295	22	8	340	295	22	12
250	440	780	730		395	350	22	12	405	355	26	12
300	525	975	850		445	400	22	12	460	410	26	12

Combinazione materiali standard – Standard materials Combination

		A/316	A/B	CF8M/316
ITEM	DENOMINAZIONE DENOMINATION	MATERIALE MATERIAL	MATERIALE MATERIAL	MATERIALE MATERIAL
01	Body	Cast steel GP240-GH UNI EN10213	Cast steel GP240-GH UNI EN10213	Stainless steel CF8M ASTM A351
02	Disc (≤ DN80)	Stainless steel AISI316 UNI EN10088	Bronze UNI EN1982 G-CuSn5Zn5Pb5	Stainless steel AISI316 UNI EN10088
02	Disc (≥ DN100)	Cast steel GP240-GH UNI EN10213 plus AISI316 facing welding	Bronze UNI EN1982 G-CuSn5Zn5Pb5	Cast steel GP240-GH UNI EN10213 plus AISI316 facing welding
03	Inner head flange	Cast iron UNI EN1561 EN-GJL-250	Cast iron UNI EN1561 EN-GJL-250	Cast iron UNI EN1561 EN-GJL-250
04	Stem	Stainless steel AISI316 UNI EN10088	Stainless steel AISI316 UNI EN10088	Stainless steel AISI316 UNI EN10088
05	Piston	Steel 9SMnPb28 UNI EN10087	Steel 9SMnPb28 UNI EN10087	Steel 9SMnPb28 UNI EN10087
06	Housing welded assembly	Fe52.2 GALVANIZED	Fe52.2 GALVANIZED	Fe52.2 GALVANIZED
07	Head flange	Steel UNI C40	Steel UNI C40	Steel UNI C40
08	Proximity switch support	Fe37 GALVANIZED	Fe37 GALVANIZED	Fe37 GALVANIZED
09	Proximity switch	CEED BG12/2PF2 PNP CEOM E2FX2E2G NPN	CEED BG12/2PF2 PNP CEOM E2FX2E2G NPN	CEED BG12/2PF2 PNP CEOM E2FX2E2G NPN
10	Indicator washer	Steel 9SMnPb28 UNI EN10087	Steel 9SMnPb28 UNI EN10087	Steel 9SMnPb28 UNI EN10087
11	Index open/close	Brass CW617N (OT58)	Brass CW617N (OT58)	Brass CW617N (OT58)
12	Flange	Steel UNI C40	Steel UNI C40	Steel UNI C40
13	Snap ring ø5	Stainless steel AISI316 UNI EN10088	Stainless steel AISI316 UNI EN10088	Stainless steel AISI316 UNI EN10088
14	Collar	Fe52.2 GALVANIZED	Fe52.2 GALVANIZED	Fe52.2 GALVANIZED
15	Back rod	Steel 9SMnPb28 UNI EN10087	Steel 9SMnPb28 UNI EN10087	Steel 9SMnPb28 UNI EN10087
16	Shield	Stainless steel AISI316 UNI EN10088	Stainless steel AISI316 UNI EN10088	Stainless steel AISI316 UNI EN10088

Nota: Combinazioni materiali non standard a richiesta
Note: Non standard materials combinations on request

Valvole a globo PN10DIN-PN16 con attuatore idraulico semplice effetto normalmente chiuso (FC)

Globe valves NP10DIN-NP16 with hydraulic single acting actuator fail close (FC)

Tab.126A-SR-FC

(Ex Tab. 129/1-SR-FC)

Conform to:
UNI EN1092
DIN 3202

Esecuzione 01
con otturatore Com.

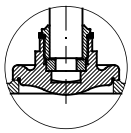

Execution 01
with SDSL disc

Esecuzione 02
con otturatore Aut.

Execution 02
with SDNR disc

con Proximity limit switch (a richiesta)
with Proximity limit switch (on request)

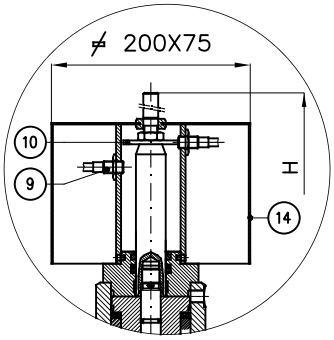

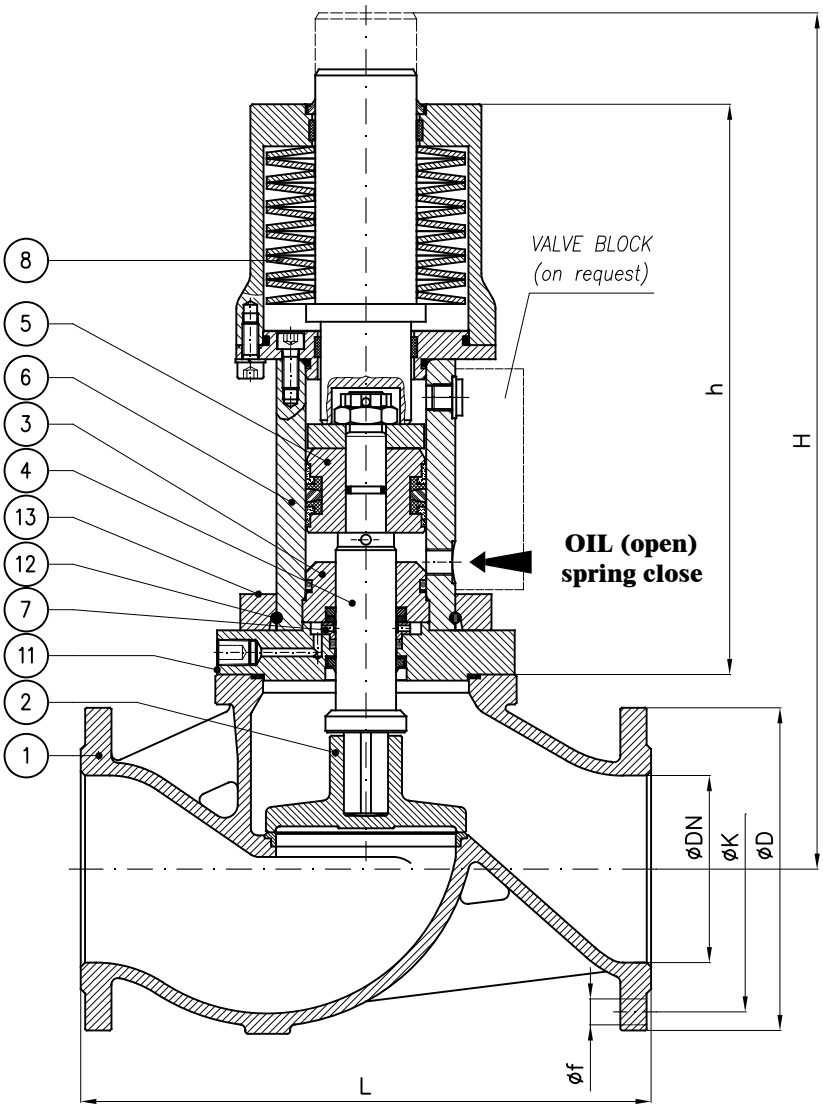

N.B.: Il dimensionamento e quindi anche l'ingombro dell'attuatore è funzione dei seguenti dati che devono sempre essere forniti:

- Pressione esercizio della valvola
- pressione olio all'attuatore
- Servizio

Note.: The size and so the overall dimension of the actuator depends by the following informations that should always be provided:

- *Valve's working pressure*
- *Oil pressure to actuator*
- *Service*

					PN10DIN				PN16			
DN	h (~)	H (~)	L	Weight (Kg)	øD	K	f	Holes NO. f	øD	K	f	Holes NO. f
32	305	410	180		140	100	18	4	140	100	18	4
40	305	410	200		150	110	18	4	150	110	18	4
50	295	410	230		165	125	18	4	165	125	18	4
65	285	430	290		185	145	18	4	185	145	18	4
80	335	485	310		200	160	18	8	200	160	18	8
100	320	495	350		220	180	18	8	220	180	18	8
125	420	620	400		250	210	18	8	250	210	18	8
150	485	710	480		285	240	22	8	285	240	22	8
200	485	780	600		340	295	22	8	340	295	22	12
250	565	830	730		395	350	22	12	405	355	25	12

Combinazione materiali standard – Standard materials Combination				
		A/316	A/B	CF8M/316
ITEM	DENOMINAZIONE DENOMINATION	MATERIALE MATERIAL	MATERIALE MATERIAL	MATERIALE MATERIAL
01	Body	Cast steel GP240-GH UNI EN10213	Cast steel GP240-GH UNI EN10213	Stainless steel CF8M ASTM A351
02	Disc (≤ DN80)	Stainless steel AISI316 UNI EN10088	Bronze UNI EN1982 G-CuSn5Zn5Pb5	Stainless steel AISI316 UNI EN10088
02	Disc (≥ DN100)	Cast steel GP240-GH UNI EN10213 plus AISI316 facing welding	Bronze UNI EN1982 G-CuSn5Zn5Pb5	Cast steel GP240-GH UNI EN10213 plus AISI316 facing welding
03	Inner head flange	Cast iron UNI EN1561 EN-GJL-250	Cast iron UNI EN1561 EN-GJL-250	Cast iron UNI EN1561 EN-GJL-250
04	Stem	Stainless steel AISI316 UNI EN10088	Stainless steel AISI316 UNI EN10088	Stainless steel AISI316 UNI EN10088
05	Piston	Steel 9SMnPb28 UNI EN10087	Steel 9SMnPb28 UNI EN10087	Steel 9SMnPb28 UNI EN10087
06	Housing assembly	Fe52.2 GALVANIZED	Fe52.2 GALVANIZED	Fe52.2 GALVANIZED
07	Back rod	Steel 9SMnPb28 UNI EN10087	Steel 9SMnPb28 UNI EN10087	Steel 9SMnPb28 UNI EN10087
08	Disk spring	Steel UNI EN10270	Steel UNI EN10270	Steel UNI EN10270
09	Proximity switch	CEED BG12/2PF2 PNP CEOM E2FX2E2G NPN	CEED BG12/2PF2 PNP CEOM E2FX2E2G NPN	CEED BG12/2PF2 PNP CEOM E2FX2E2G NPN
10	Indicator washer	Steel 9SMnPb28 UNI EN10087	Steel 9SMnPb28 UNI EN10087	Steel 9SMnPb28 UNI EN10087
11	Flange	Steel UNI C40	Steel UNI C40	Steel UNI C40
12	Snap ring ø5	Stainless steel AISI316 UNI EN10088	Stainless steel AISI316 UNI EN10088	Stainless steel AISI316 UNI EN10088
13	Collar	Fe52.2 GALVANIZED	Fe52.2 GALVANIZED	Fe52.2 GALVANIZED
14	Shield	Stainless steel AISI316 UNI EN10088	Stainless steel AISI316 UNI EN10088	Stainless steel AISI316 UNI EN10088

Nota: Combinazioni materiali non standard a richiesta
Note: Non standard materials combinations on request

Valvole a globo PN10DIN-PN16 con attuatore idraulico semplice effetto normalmente aperto (FO)

Globe valves NP10DIN-NP16 with hydraulic single acting actuator fail open (FO)

Tab.126A-SR-FO

(Ex Tab. 129/1-SR-FO)

Conform to:
UNI EN1092
DIN 3202

Esecuzione 01
con otturatore Com.

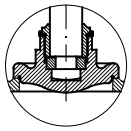

Execution 01
with SDSL disc

Esecuzione 02
con otturatore Aut.

Execution 02
with SDNR disc

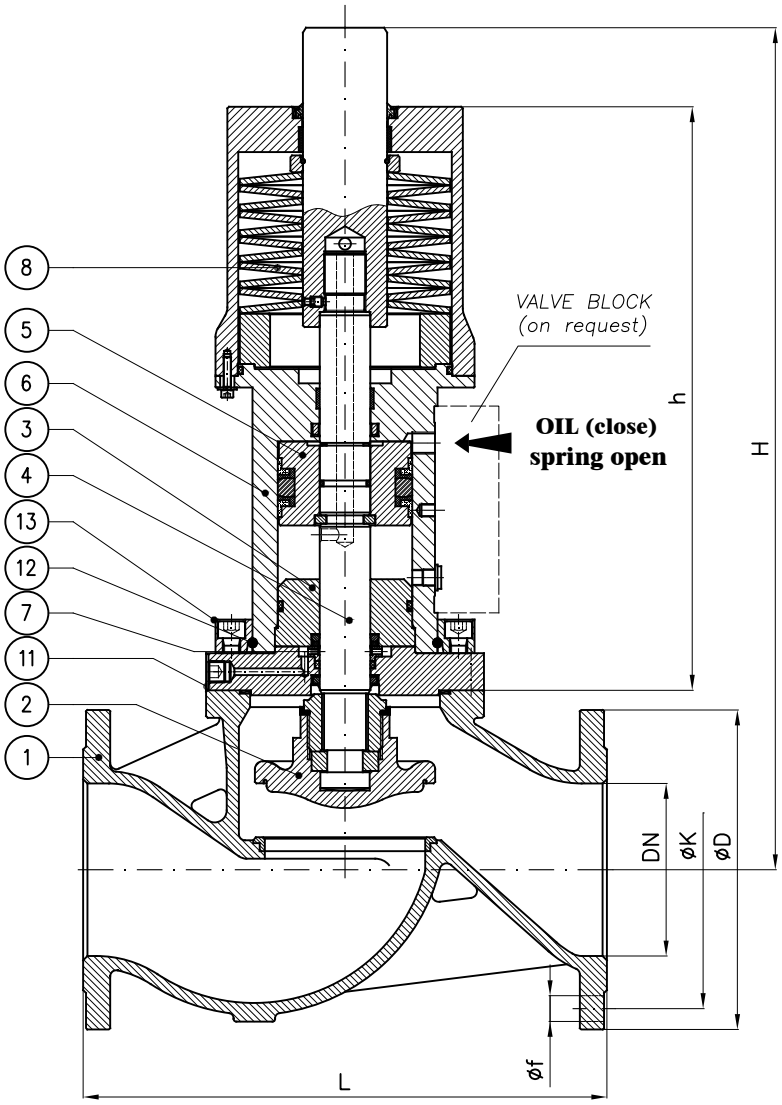

con Proximity limit switch (a richiesta)
with Proximity limit switch (on request)

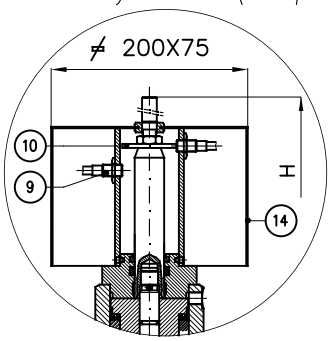

N.B.: Il dimensionamento e quindi anche l'ingombro dell'attuatore è funzione dei seguenti dati che devono sempre essere forniti:

- Pressione esercizio della valvola
- pressione olio all'attuatore
- Servizio

Note.: The size and so the overall dimension of the actuator depends by the following informations that should always be provided:

- *Valve's working pressure*
- *Oil pressure to actuator*
- *Service*

					PN10DIN				PN16			
DN	h (~)	H (~)	L	Weight (Kg)	øD	K	f	Holes NO. f	øD	K	f	Holes NO. f
32	305	410	180		140	100	18	4	140	100	18	4
40	305	410	200		150	110	18	4	150	110	18	4
50	295	410	230		165	125	18	4	165	125	18	4
65	285	430	290		185	145	18	4	185	145	18	4
80	335	485	310		200	160	18	8	200	160	18	8
100	320	495	350		220	180	18	8	220	180	18	8
125	420	620	400		250	210	18	8	250	210	18	8
150	485	710	480		285	240	22	8	285	240	22	8
200	485	780	600		340	295	22	8	340	295	22	12
250	565	830	730		395	350	22	12	405	355	26	12

Combinazione materiali standard – Standard materials Combination				
		A/316	A/B	CF8M/316
ITEM	DENOMINAZIONE DENOMINATION	MATERIALE MATERIAL	MATERIALE MATERIAL	MATERIALE MATERIAL
01	Body	Cast steel GP240-GH UNI EN10213	Cast steel GP240-GH UNI EN10213	Stainless steel CF8M ASTM A351
02	Disc (≤ DN80)	Stainless steel AISI316 UNI EN10088	Bronze UNI EN1982 G-CuSn5Zn5Pb5	Stainless steel AISI316 UNI EN10088
02	Disc (≥ DN100)	Cast steel GP240-GH UNI EN10213 plus AISI316 facing welding	Bronze UNI EN1982 G-CuSn5Zn5Pb5	Cast steel GP240-GH UNI EN10213 plus AISI316 facing welding
03	Inner head flange	Cast iron UNI EN1561 EN-GJL-250	Cast iron UNI EN1561 EN-GJL-250	Cast iron UNI EN1561 EN-GJL-250
04	Stem	Stainless steel AISI316 UNI EN10088	Stainless steel AISI316 UNI EN10088	Stainless steel AISI316 UNI EN10088
05	Piston	Steel 9SMnPb28 UNI EN10087	Steel 9SMnPb28 UNI EN10087	Steel 9SMnPb28 UNI EN10087
06	Housing assembly	Fe52.2 GALVANIZED	Fe52.2 GALVANIZED	Fe52.2 GALVANIZED
07	Back rod	Steel 9SMnPb28 UNI EN10087	Steel 9SMnPb28 UNI EN10087	Steel 9SMnPb28 UNI EN10087
08	Disk spring	Steel UNI EN10270	Steel UNI EN10270	Steel UNI EN10270
09	Proximity switch	CEED BG12/2PF2 PNP CEOM E2FX2E2G NPN	CEED BG12/2PF2 PNP CEOM E2FX2E2G NPN	CEED BG12/2PF2 PNP CEOM E2FX2E2G NPN
10	Indicator washer	Steel 9SMnPb28 UNI EN10087	Steel 9SMnPb28 UNI EN10087	Steel 9SMnPb28 UNI EN10087
11	Flange	Steel UNI C40	Steel UNI C40	Steel UNI C40
12	Snap ring ø5	Stainless steel AISI316 UNI EN10088	Stainless steel AISI316 UNI EN10088	Stainless steel AISI316 UNI EN10088
13	Collar	Fe52.2 GALVANIZED	Fe52.2 GALVANIZED	Fe52.2 GALVANIZED
14	Shield	Stainless steel AISI316 UNI EN10088	Stainless steel AISI316 UNI EN10088	Stainless steel AISI316 UNI EN10088

Nota: Combinazioni materiali non standard a richiesta
Note: Non standard materials combinations on request

Valvole a via diritta - serie pesante PN10DIN-PN16
Globe valves straight type - heavy class NP10DIN-NP16

Tab.126B

Conform to:
UNI EN1092
DIN 3202

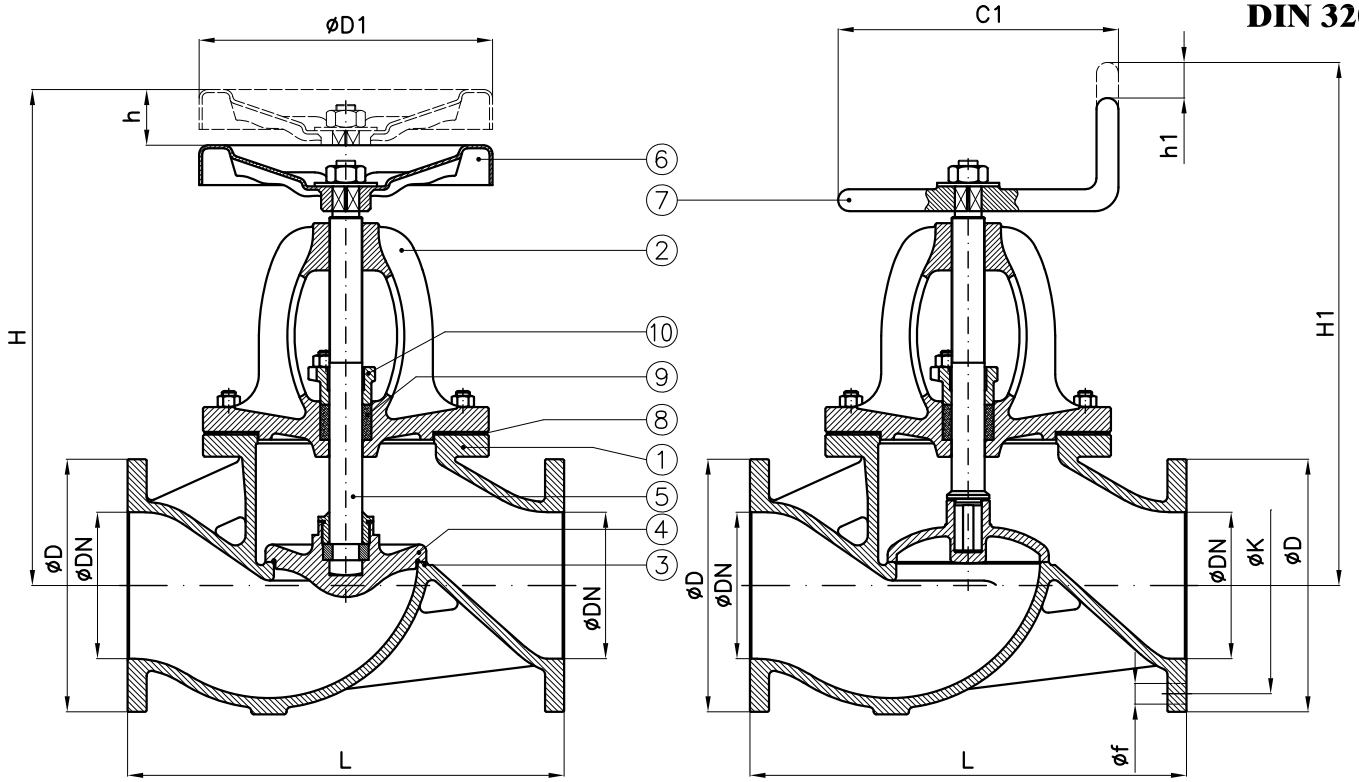

Tab.126B-SDSL TYPE	PN10DIN	PN16
comandata (SDSL) with fixed disc (SDSL)	-	UNAV 9803

Tab.126B-SDNR TYPE	PN10DIN	PN16
semiautomatica (SDNR) with loose disc (SDNR)	-	UNAV 9806

									PN10DIN				PN16			
DN	C1	D1	H SDSL (~)	h SDSL	H1 SDNR (~)	h1 SDNR	L	Weight (Kg)	D	K	f	Holes NO. f	D	K	f	Holes NO. f
15	100	100	210	12	235	8	130	6	95	65	14	4	95	65	14	4
20	100	100	215	12	240	8	150	6.5	105	75	14	4	105	75	14	4
25	100	100	225	14	250	9	160	7.5	115	85	14	4	115	85	14	4
32	125	125	265	17	290	10	180	10.5	140	100	18	4	140	100	18	4
40	125	125	255	20	280	12	200	11	150	110	18	4	150	110	18	4
50	125	125	265	24	295	14	230	13	165	125	18	4	165	125	18	4
65	175	175	340	32	365	18	290	21	185	145	18	4	185	145	18	4
80	175	175	335	35	355	20	310	26	200	160	18	8	200	160	18	8
100	200	200	410	45	415	28	350	42	220	180	18	8	220	180	18	8
125	225	225	440	54	455	32	400	52	250	210	18	8	250	210	18	8
150	225	300	490	62	505	38	480	83	285	240	22	8	285	240	22	8
175	250	400	545	74	560	45	550	115	315	270	22	8	315	270	22	8
200	250	400	660	82	640	50	600	165	340	295	22	8	340	295	22	12
250	300	500	655	100	700	66	730	202	395	350	22	12	405	355	26	12
300	425	575	810	118	825	85	850	314	445	400	22	12	460	410	26	12
350	500		900	130	920	90	980	460	505	460	22	16	520	470	26	16
400	575		1000	135	1020	100	1100	595	565	515	26	16	580	525	30	16
450	650		1250	160	1300	115	1300		615	565	26	20	640	585	30	20
500			1400	180	1450	130	1500		670	620	26	20	715	650	33	20
600			1600	215	1650	160	1800		780	725	30	20	840	770	36	20

Combinazione materiali standard – Standard materials Combination			
		B/316	B/B
ITEM	DENOMINAZIONE DENOMINATION	MATERIALE MATERIAL	MATERIALE MATERIAL
01	Body	Bronze UNI EN1982 G-CuSn5Zn5Pb5	Bronze UNI EN1982 G-CuSn5Zn5Pb5
02	Bonnet	Bronze UNI EN1982 G-CuSn5Zn5Pb5	Bronze UNI EN1982 G-CuSn5Zn5Pb5
03	Integral body seat	Bronze UNI EN1982 G-CuSn5Zn5Pb5	Bronze UNI EN1982 G-CuSn5Zn5Pb5
04	Disc	Stainless steel AISI316 UNI EN10088	Bronze UNI EN1982 G-CuSn5Zn5Pb5
05	Stem	Stainless steel AISI316 UNI EN10088	Brass CW617N (OT58)
06	Handwheel	Sheet of carbon steel	Sheet of carbon steel
07	Handle	Steel A37 UNI EN10217-1	Steel A37 UNI EN10217-1
08	Gasket	EPDM	EPDM
09	Packing	Carbograph GR8800	Carbograph GR8800
10	Gland bushing	Brass CW509L (OT60)	Brass CW509L (OT60)

Nota: Combinazioni materiali non standard a richiesta
Note: Non standard materials combinations on request

Valvole a globo PN10DIN-PN16 con attuatore idraulico doppio effetto
Globe valves NP10DIN-NP16 with hydraulic double acting actuator

Tab.126B-DA

(Ex Tab. 129/1-DA)

Conform to:
UNI EN1092
DIN 3202

Esecuzione 01
con otturatore Com.

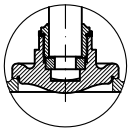

Execution 01
with SDSL disc

Esecuzione 02
con otturatore Aut.

Execution 02
with SDNR disc

con Proximity limit switch (a richiesta)
with Proximity limit switch (on request)

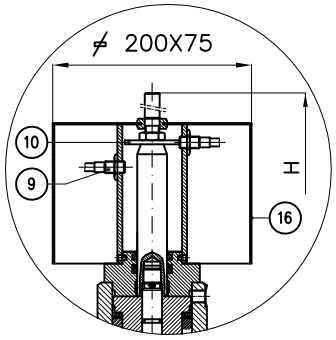

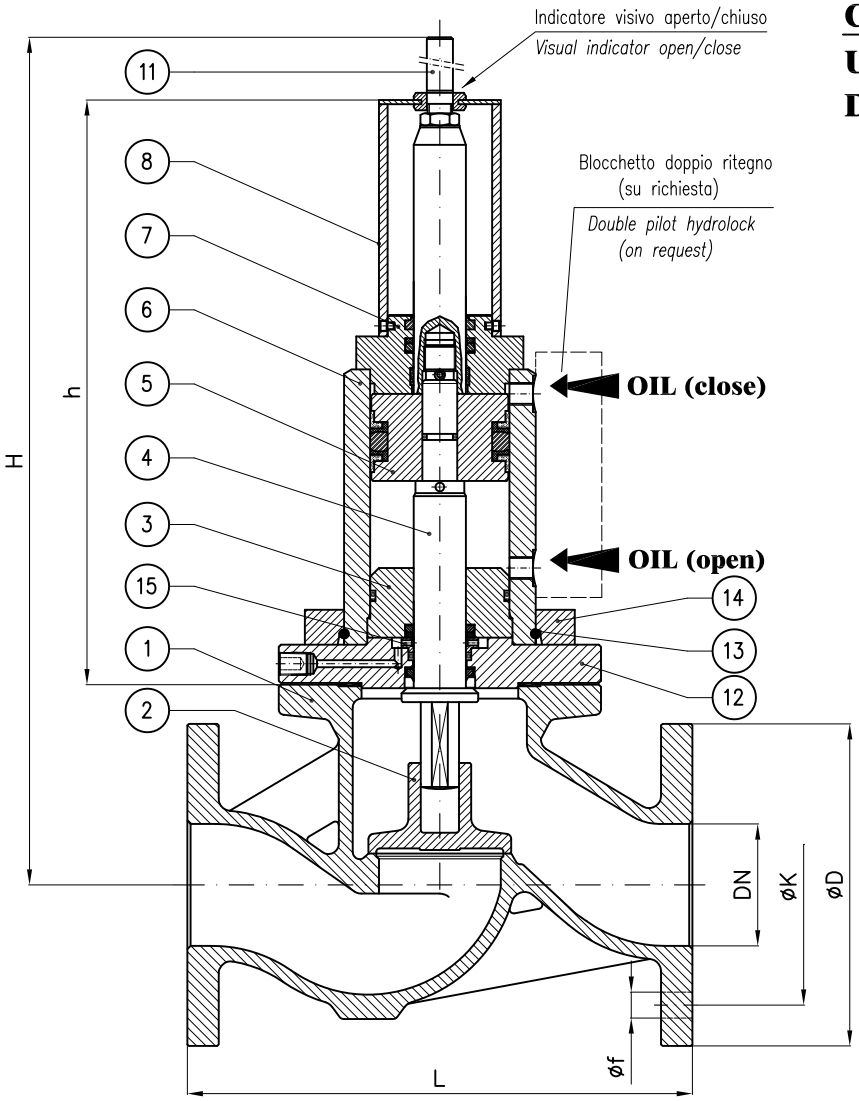

N.B.: Il dimensionamento e quindi anche l'ingombro dell'attuatore è funzione dei seguenti dati che devono sempre essere forniti:

- Pressione esercizio della valvola
- pressione olio all'attuatore
- Servizio

Note.: The size and so the overall dimension of the actuator depends by the following informations that should always be provided:

- *Valve's working pressure*
- *Oil pressure to actuator*
- *Service*

					PN10DIN				PN16			
DN	h (~)	H (~)	L	Weight (Kg)	øD	K	f	Holes NO. f	øD	K	f	Holes NO. f
20	210	280	150		105	75	14	4	105	75	14	4
25	210	290	160		115	85	14	4	115	85	14	4
32	335	440	180		140	100	18	4	140	100	18	4
40	335	445	200		150	110	18	4	150	110	18	4
50	320	445	230		165	125	18	4	165	125	18	4
65	315	475	290		185	145	18	4	185	145	18	4
80	340	490	310		200	160	18	8	200	160	18	8
100	340	515	350		220	180	18	8	220	180	18	8
125	360	565	400		250	210	18	8	250	210	18	8
150	360	585	480		285	240	22	8	285	240	22	8
200	440	760	600		340	295	22	8	340	295	22	12
250	440	780	730		395	350	22	12	405	355	26	12
300	525	975	850		445	400	22	12	460	410	26	12

Combinazione materiali standard – Standard materials Combination

		B/316	B/B
ITEM	DENOMINAZIONE DENOMINATION	MATERIALE MATERIAL	MATERIALE MATERIAL
01	Body	Bronze UNI EN1982 G-CuSn5Zn5Pb5	Bronze UNI EN1982 G-CuSn5Zn5Pb5
02	Disc (≤ DN80)	Stainless steel AISI316 UNI EN10088	Bronze UNI EN1982 G-CuSn5Zn5Pb5
02	Disc (≥ DN100)	Cast steel GP240-GH UNI EN10213 plus AISI316 facing welding	Bronze UNI EN1982 G-CuSn5Zn5Pb5
03	Inner head flange	Cast iron UNI EN1561 EN-GJL-250	Cast iron UNI EN1561 EN-GJL-250
04	Stem	Stainless steel AISI316 UNI EN10088	Stainless steel AISI316 UNI EN10088
05	Piston	Steel 9SMnPb28 UNI EN10087	Steel 9SMnPb28 UNI EN10087
06	Housing welded assembly	Fe52.2 GALVANIZED	Fe52.2 GALVANIZED
07	Head flange	Steel UNI C40	Steel UNI C40
08	Proximity switch support	Fe37 GALVANIZED	Fe37 GALVANIZED
09	Proximity switch	CEED BG12/2PF2 PNP CEOM E2FX2E2G NPN	CEED BG12/2PF2 PNP CEOM E2FX2E2G NPN
10	Indicator washer	Steel 9SMnPb28 UNI EN10087	Steel 9SMnPb28 UNI EN10087
11	Index open/close	Brass CW617N (OT58)	Brass CW617N (OT58)
12	Flange	Bronze UNI EN1982	Bronze UNI EN1982
13	Snap ring ø5	Stainless steel AISI316 UNI EN10088	Stainless steel AISI316 UNI EN10088
14	Collar	Fe52.2 GALVANIZED	Fe52.2 GALVANIZED
15	Back rod	Steel 9SMnPb28 UNI EN10087	Steel 9SMnPb28 UNI EN10087
16	Shield	Stainless steel AISI316 UNI EN10088	Stainless steel AISI316 UNI EN10088

Nota: Combinazioni materiali non standard a richiesta
Note: Non standard materials combinations on request

Valvole a globo PN10DIN-PN16 con attuatore idraulico semplice effetto normalmente chiuso (FC)

Globe valves NP10DIN-NP16 with hydraulic single acting actuator fail close (FC)

Tab.126B-SR-FC

(Ex Tab. 129/1-SR-FC)

Conform to:
UNI EN1092
DIN 3202

Esecuzione 01
con otturatore Com.

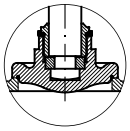

Execution 01
with SDSL disc

Esecuzione 02
con otturatore Aut.

Execution 02
with SDNR disc

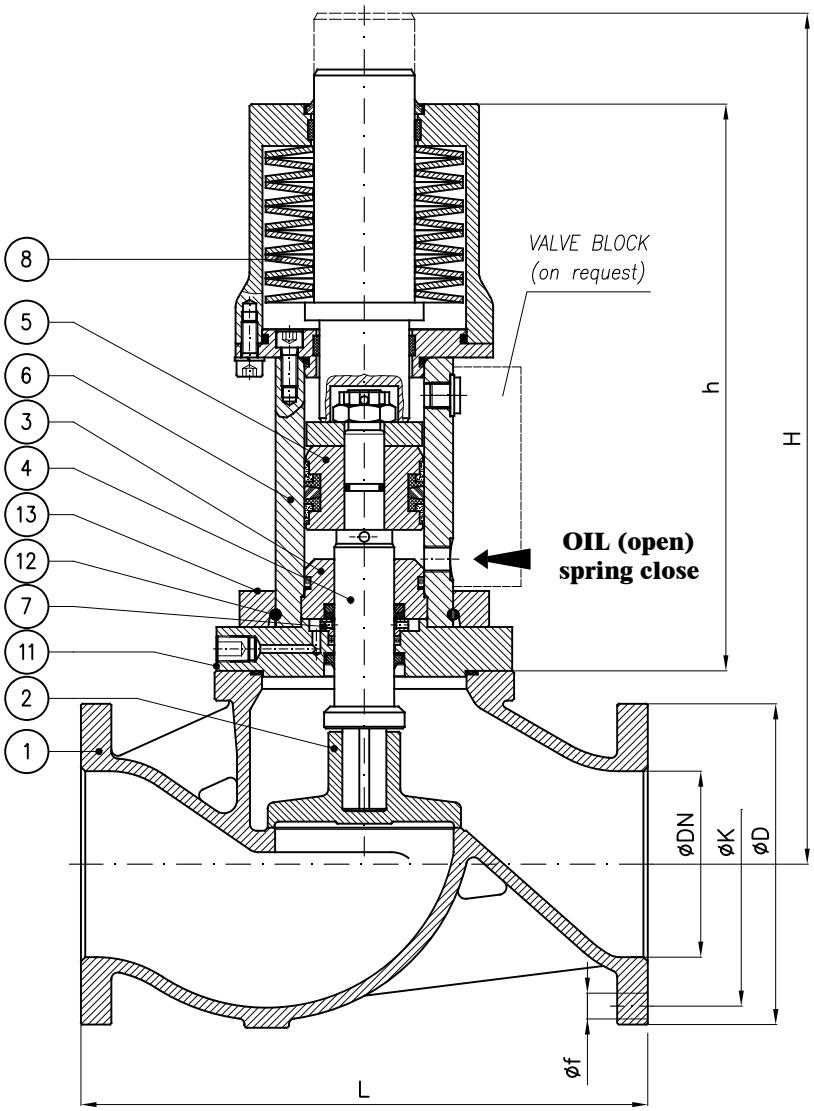

con Proximity limit switch (a richiesta)
with Proximity limit switch (on request)

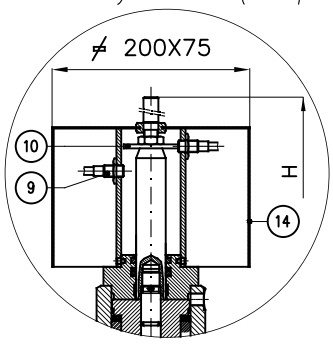

N.B.: Il dimensionamento e quindi anche l'ingombro dell'attuatore è funzione dei seguenti dati che devono sempre essere forniti:

- Pressione esercizio della valvola
- pressione olio all'attuatore
- Servizio

Note.: The size and so the overall dimension of the actuator depends by the following informations that should always be provided:

- *Valve's working pressure*
- *Oil pressure to actuator*
- *Service*

					PN10DIN				PN16			
DN	h (~)	H (~)	L	Weight (Kg)	øD	K	f	Holes NO. f	øD	K	f	Holes NO. f
32	305	410	180		140	100	18	4	140	100	18	4
40	305	410	200		150	110	18	4	150	110	18	4
50	295	410	230		165	125	18	4	165	125	18	4
65	285	430	290		185	145	18	4	185	145	18	4
80	335	485	310		200	160	18	8	200	160	18	8
100	320	495	350		220	180	18	8	220	180	18	8
125	420	620	400		250	210	18	8	250	210	18	8
150	485	710	480		285	240	22	8	285	240	22	8
200	485	780	600		340	295	22	8	340	295	22	12
250	485	830	730		395	350	22	12	405	355	26	12

Combinazione materiali standard – Standard materials Combination			
		B/316	B/B
ITEM	DENOMINAZIONE DENOMINATION	MATERIALE MATERIAL	MATERIALE MATERIAL
01	Body	Bronze UNI EN1982 G-CuSn5Zn5Pb5	Bronze UNI EN1982 G-CuSn5Zn5Pb5
02	Disc (≤ DN80)	Stainless steel AISI316 UNI EN10088	Bronze UNI EN1982 G-CuSn5Zn5Pb5
02	Disc (≥ DN100)	Cast steel GP240-GH UNI EN10213 plus AISI316 facing welding	Bronze UNI EN1982 G-CuSn5Zn5Pb5
03	Inner head flange	Cast iron UNI EN1561 EN-GJL-250	Cast iron UNI EN1561 EN-GJL-250
04	Stem	Stainless steel AISI316 UNI EN10088	Stainless steel AISI316 UNI EN10088
05	Piston	Steel 9SMnPb28 UNI EN10087	Steel 9SMnPb28 UNI EN10087
06	Housing assembly	Fe52.2 GALVANIZED	Fe52.2 GALVANIZED
07	Back rod	Steel 9SMnPb28 UNI EN10087	Steel 9SMnPb28 UNI EN10087
08	Disk spring	Steel UNI EN10270	Steel UNI EN10270
09	Proximity switch	CEED BG12/2PF2 PNP CEOM E2FX2E2G NPN	CEED BG12/2PF2 PNP CEOM E2FX2E2G NPN
10	Indicator washer	Steel 9SMnPb28 UNI EN10087	Steel 9SMnPb28 UNI EN10087
11	Flange	Bronze UNI EN1982	Bronze UNI EN1982
12	Snap ring ø5	Stainless steel AISI316 UNI EN10088	Stainless steel AISI316 UNI EN10088
13	Collar	Fe52.2 GALVANIZED	Fe52.2 GALVANIZED
14	Shield	Stainless steel AISI316 UNI EN10088	Stainless steel AISI316 UNI EN10088

Nota: Combinazioni materiali non standard a richiesta
Note: Non standard materials combinations on request

Valvole a globo PN10DIN-PN16 con attuatore idraulico semplice effetto normalmente aperto (FO)

Globe valves NP10DIN-NP16 with hydraulic single acting actuator fail open (FO)

Tab.126B-SR-FO

(Ex Tab. 129/1-SR-FO)

Conform to:

UNI EN1092

DIN 3202

Esecuzione 01
con otturatore Com.

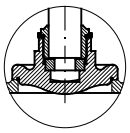

Execution 01
with SDSL disc

Esecuzione 02
con otturatore Aut.

Execution 02
with SDNR disc

con Proximity limit switch (a richiesta)
with Proximity limit switch (on request)

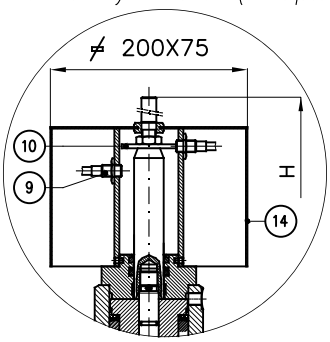

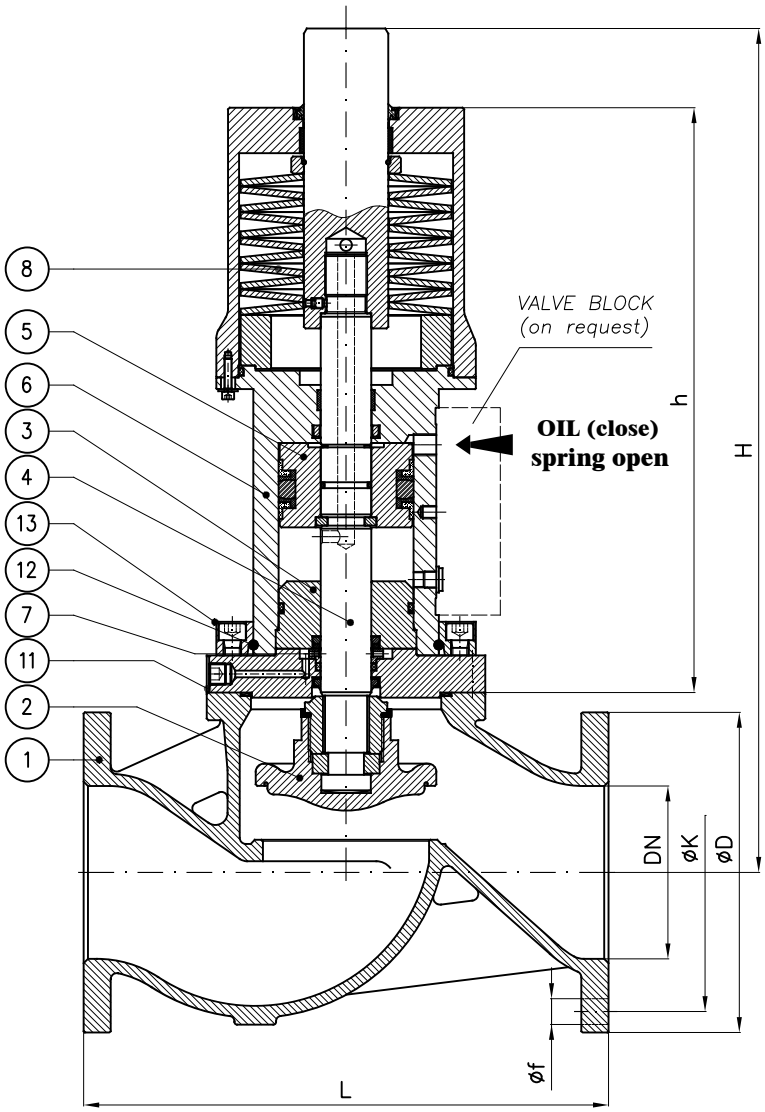

N.B.: Il dimensionamento e quindi anche l'ingombro dell'attuatore è funzione dei seguenti dati che devono sempre essere forniti:

- Pressione esercizio della valvola
- pressione olio all'attuatore
- Servizio

Note.: The size and so the overall dimension of the actuator depends by the following informations that should always be provided:

- *Valve's working pressure*
- *Oil pressure to actuator*
- *Service*

					PN10DIN				PN16			
DN	h (~)	H (~)	L	Weight (Kg)	øD	K	f	Holes NO. f	øD	K	f	Holes NO. f
32	305	410	180		140	100	18	4	140	100	18	4
40	305	410	200		150	110	18	4	150	110	18	4
50	295	410	230		165	125	18	4	165	125	18	4
65	285	430	290		185	145	18	4	185	145	18	4
80	335	485	310		200	160	18	8	200	160	18	8
100	320	495	350		220	180	18	8	220	180	18	8
125	420	620	400		250	210	18	8	250	210	18	8
150	485	710	480		285	240	22	8	285	240	22	8
200	485	780	600		340	295	22	8	340	295	22	12
250	565	830	730		395	350	22	12	405	355	26	12

Combinazione materiali standard – Standard materials Combination

		B/316	B/B
ITEM	DENOMINAZIONE DENOMINATION	MATERIALE MATERIAL	MATERIALE MATERIAL
01	Body	Bronze UNI EN1982 G-CuSn5Zn5Pb5	Bronze UNI EN1982 G-CuSn5Zn5Pb5
02	Disc (≤ DN80)	Stainless steel AISI316 UNI EN10088	Bronze UNI EN1982 G-CuSn5Zn5Pb5
02	Disc (≥ DN100)	Cast steel GP240-GH UNI EN10213 plus AISI316 facing welding	Bronze UNI EN1982 G-CuSn5Zn5Pb5
03	Inner head flange	Cast iron UNI EN1561 EN-GJL-250	Cast iron UNI EN1561 EN-GJL-250
04	Stem	Stainless steel AISI316 UNI EN10088	Stainless steel AISI316 UNI EN10088
05	Piston	Steel 9SMnPb28 UNI EN10087	Steel 9SMnPb28 UNI EN10087
06	Housing assembly	Fe52.2 GALVANIZED	Fe52.2 GALVANIZED
07	Back rod	Steel 9SMnPb28 UNI EN10087	Steel 9SMnPb28 UNI EN10087
08	Disk spring	Steel UNI EN10270	Steel UNI EN10270
09	Proximity switch	CEED BG12/2PF2 PNP CEOM E2FX2E2G NPN	CEED BG12/2PF2 PNP CEOM E2FX2E2G NPN
10	Indicator washer	Steel 9SMnPb28 UNI EN10087	Steel 9SMnPb28 UNI EN10087
11	Flange	Bronze UNI EN1982	Bronze UNI EN1982
12	Snap ring ø5	Stainless steel AISI316 UNI EN10088	Stainless steel AISI316 UNI EN10088
13	Collar	Fe52.2 GALVANIZED	Fe52.2 GALVANIZED
14	Shield	Stainless steel AISI316 UNI EN10088	Stainless steel AISI316 UNI EN10088

Nota: Combinazioni materiali non standard a richiesta
Note: Non standard materials combinations on request

Valvole a via diritta - serie pesante PN10DIN-PN16
Globe valves straight type - heavy class NP10DIN-NP16

Tab.126G

Conform to:
UNI EN1092
DIN 3202

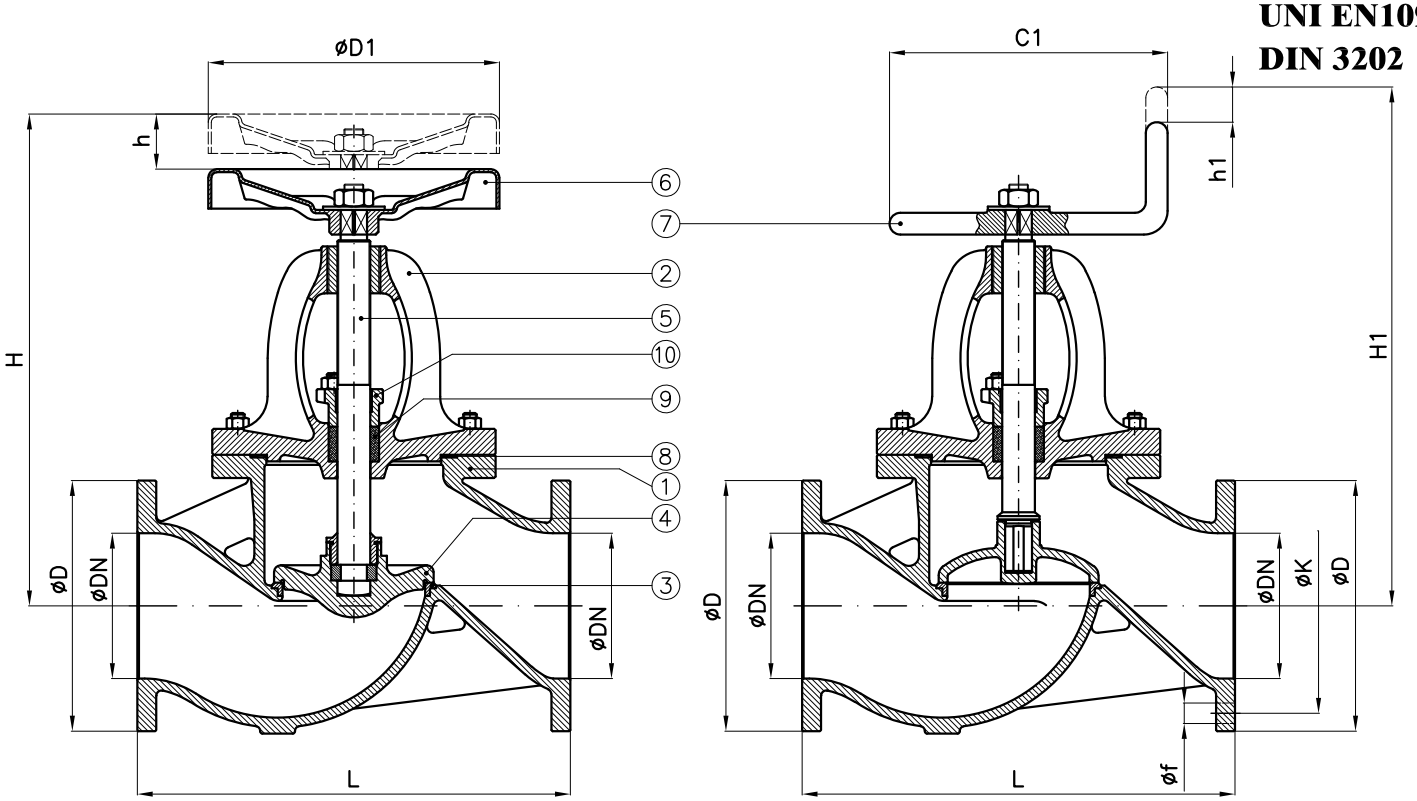

Tab.126G-SDSL TYPE	PN10DIN	PN16
comandata (SDSL) with fixed disc (SDSL)	-	UNI 3412 UNAV 8425

Tab.126G-SDNR TYPE	PN10DIN	PN16
semiautomatica (SDNR) with loose disc (SDNR)	-	UNI 3416 UNAV 8427

									PN10DIN				PN16			
DN	C1	D1	H SDSL (~)	h SDSL	H1 SDNR (~)	h1 SDNR	L	Weight (Kg)	D	K	f	Holes NO. f	D	K	f	Holes NO. f
15	100	100	215	12	245	8	150	6	95	65	14	4	95	65	14	4
20	100	100	215	12	245	8	150	6	105	75	14	4	105	75	14	4
25	100	100	225	14	255	9	160	7.5	115	85	14	4	115	85	14	4
32	125	125	245	17	275	10	180	11.5	140	100	18	4	140	100	18	4
40	125	125	260	20	285	12	200	12	150	110	18	4	150	110	18	4
50	125	125	275	24	300	14	230	14.5	165	125	18	4	165	125	18	4
65	175	175	335	32	360	18	290	23	185	145	18	4	185	145	18	4
80	175	175	345	35	370	20	310	28	200	160	18	8	200	160	18	8
100	200	200	405	45	415	28	350	41	220	180	18	8	220	180	18	8
125	225	225	450	54	455	32	400	57	250	210	18	8	250	210	18	8
150	225	300	485	62	500	38	480	77	285	240	22	8	285	240	22	8
175	250	400	565	74	595	45	550	97	315	270	22	8	315	270	22	8
200	250	400	640	82	630	50	600	157	340	295	22	8	340	295	22	12
250	300	500	720	100	710	66	730	226	395	350	22	12	405	355	26	12
300	425	575	820	118	820	85	850	262	445	400	22	12	460	410	26	12
350	500		920	130	970	90	980	448	505	460	22	16	520	470	26	16
400	575		920	135	1070	100	1100	541	565	515	26	16	580	525	30	16
450	650		1250	160	1300	115	1300		615	565	26	20	640	585	30	20
500			1400	180	1450	130	1500		670	620	26	20	715	650	33	20
600			1600	215	1650	160	1800		780	725	30	20	840	770	36	20

Combinazione materiali standard – Standard materials Combination			
		G/316	G/B
ITEM	DENOMINAZIONE DENOMINATION	MATERIALE MATERIAL	MATERIALE MATERIAL
01	Body	Cast iron UNI EN1561 EN-GJL-250	Cast iron UNI EN1561 EN-GJL-250
02	Bonnet	Cast iron UNI EN1561 EN-GJL-250	Cast iron UNI EN1561 EN-GJL-250
03	Body seat	Stainless steel AISI316 UNI EN10088	Stainless steel AISI316 UNI EN10088
04	Disc (≤ DN80)	Stainless steel AISI316 UNI EN10088	Bronze UNI EN1982 G-CuSn5Zn5Pb5
04	Disc (≥ DN100)	Cast steel GP240-GH UNI EN10213 plus AISI316 facing welding	Bronze UNI EN1982 G-CuSn5Zn5Pb5
05	Stem	Stainless steel AISI316 UNI EN10088	Brass CW617N (OT58)
06	Handwheel	Sheet of carbon steel	Sheet of carbon steel
07	Handle	Steel A37 UNI EN10217-1	Steel A37 UNI EN10217-1
08	Gasket	Planiflex KG carbo/C PF81	Planiflex KG carbo/C PF81
09	Packing	Carbograph GR8800	Carbograph GR8800
10	Gland bushing	Bronze UNI EN1982 G-CuSn5Zn5Pb5	Bronze UNI EN1982 G-CuSn5Zn5Pb5
Nota: Combinazioni materiali non standard a richiesta Note: Non standard materials combinations on request			

Valvole a globo PN10DIN-PN16 con attuatore idraulico doppio effetto
Globe valves NP10DIN-NP16 with hydraulic double acting actuator

Tab.126G-DA

Conform to:
UNI EN1092
DIN 3202

Esecuzione 01
con otturatore Com.

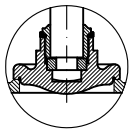

Execution 01
with SDSL disc

Esecuzione 02
con otturatore Aut.

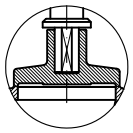

Execution 02
with SDNR disc

con Proximity limit switch (a richiesta)
with Proximity limit switch (on request)

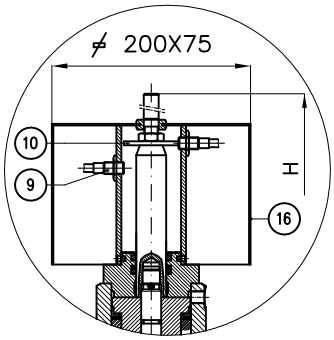

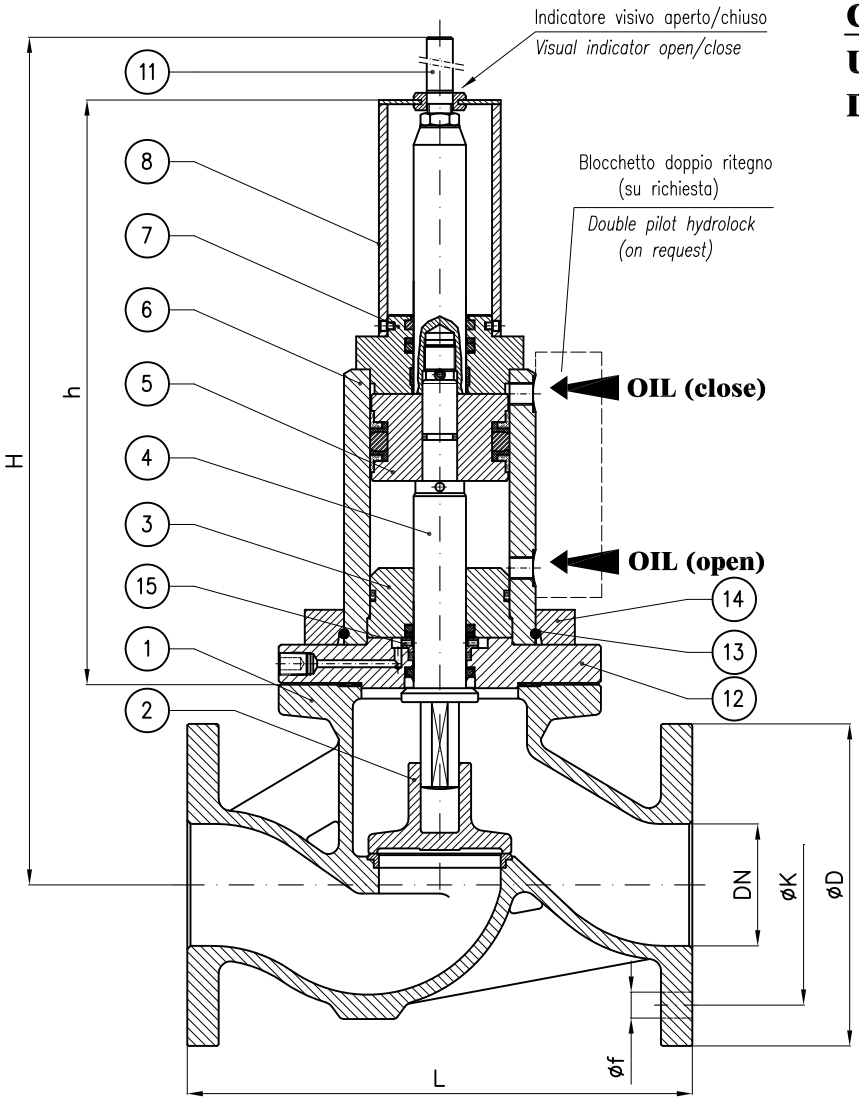

N.B.: Il dimensionamento e quindi anche l'ingombro dell'attuatore è funzione dei seguenti dati che devono sempre essere forniti:

- Pressione esercizio della valvola
- pressione olio all'attuatore
- Servizio

Note.: The size and so the overall dimension of the actuator depends by the following informations that should always be provided:

- *Valve's working pressure*
- *Oil pressure to actuator*
- *Service*

					PN10DIN				PN16			
DN	h (~)	H (~)	L	Weight (Kg)	øD	K	f	Holes NO. f	øD	K	f	Holes NO. f
20	210	280	150		105	75	14	4	105	75	14	4
25	210	290	160		115	85	14	4	115	85	14	4
32	335	440	180		140	100	18	4	140	100	18	4
40	335	445	200		150	110	18	4	150	110	18	4
50	320	445	230		165	125	18	4	165	125	18	4
65	315	475	290		185	145	18	4	185	145	18	4
80	340	490	310		200	160	18	8	200	160	18	8
100	340	515	350		220	180	18	8	220	180	18	8
125	360	565	400		250	210	18	8	250	210	18	8
150	360	585	480		285	240	22	8	285	240	22	8
200	440	760	600		340	295	22	8	340	295	22	12
250	440	780	730		395	350	22	12	405	355	26	12
300	525	975	850		445	400	22	12	460	410	26	12

Combinazione materiali standard – Standard materials Combination

		G/316	G/B
ITEM	DENOMINAZIONE DENOMINATION	MATERIALE MATERIAL	MATERIALE MATERIAL
01	Body	Cast iron UNI EN1561 EN-GJL-250	Cast iron UNI EN1561 EN-GJL-250
02	Disc (≤ DN80)	Stainless steel AISI316 UNI EN10088	Bronze UNI EN1982 G-CuSn5Zn5Pb5
02	Disc (≥ DN100)	Cast steel GP240-GH UNI EN10213 plus AISI316 facing welding	Bronze UNI EN1982 G-CuSn5Zn5Pb5
03	Inner head flange	Cast iron UNI EN1561 EN-GJL-250	Cast iron UNI EN1561 EN-GJL-250
04	Stem	Stainless steel AISI316 UNI EN10088	Stainless steel AISI316 UNI EN10088
05	Piston	Steel 9SMnPb28 UNI EN10087	Steel 9SMnPb28 UNI EN10087
06	Housing welded assembly	Fe52.2 GALVANIZED	Fe52.2 GALVANIZED
07	Head flange	Steel UNI C40	Steel UNI C40
08	Proximity switch support	Fe37 GALVANIZED	Fe37 GALVANIZED
09	Proximity switch	CEED BG12/2PF2 PNP CEOM E2FX2E2G NPN	CEED BG12/2PF2 PNP CEOM E2FX2E2G NPN
10	Indicator washer	Steel 9SMnPb28 UNI EN10087	Steel 9SMnPb28 UNI EN10087
11	Index open/close	Brass CW617N (OT58)	Brass CW617N (OT58)
12	Flange	Steel UNI C40	Steel UNI C40
13	Snap ring ø5	Stainless steel AISI316 UNI EN10088	Stainless steel AISI316 UNI EN10088
14	Collar	Fe52.2 GALVANIZED	Fe52.2 GALVANIZED
15	Back rod	Steel 9SMnPb28 UNI EN10087	Steel 9SMnPb28 UNI EN10087
16	Shield	Stainless steel AISI316 UNI EN10088	Stainless steel AISI316 UNI EN10088

Nota: Combinazioni materiali non standard a richiesta
Note: Non standard materials combinations on request

Valvole a globo PN10DIN-PN16 con attuatore idraulico semplice effetto normalmente chiuso (FC)

Globe valves NP10DIN-NP16 with hydraulic single acting actuator fail close (FC)

Tab.126G-SR-FC

Conform to:
UNI EN1092
DIN 3202

Esecuzione 01
con otturatore Com.

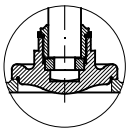

Execution 01
with SDSL disc

Esecuzione 02
con otturatore Aut.

Execution 02
with SDNR disc

con Proximity limit switch (a richiesta)
with Proximity limit switch (on request)

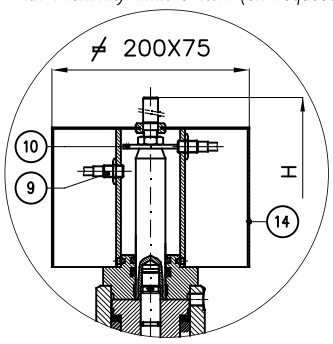

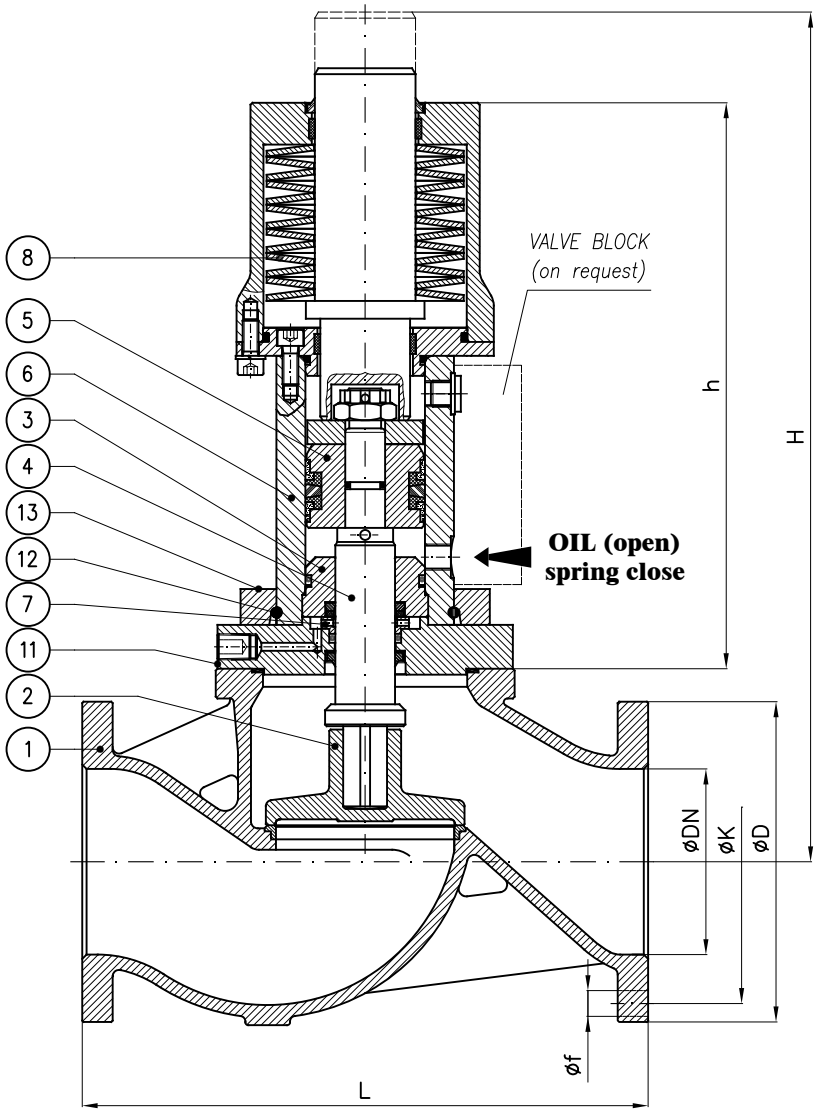

N.B.: Il dimensionamento e quindi anche l'ingombro dell'attuatore è funzione dei seguenti dati che devono sempre essere forniti:

- Pressione esercizio della valvola
- pressione olio all'attuatore
- Servizio

Note.: The size and so the overall dimension of the actuator depends by the following informations that should always be provided:

- *Valve's working pressure*
- *Oil pressure to actuator*
- *Service*

					PN10DIN				PN16			
DN	h (~)	H (~)	L	Weight (Kg)	øD	K	f	Holes NO. f	øD	K	f	Holes NO. f
32	305	410	180		140	100	18	4	140	100	18	4
40	305	410	200		150	110	18	4	150	110	18	4
50	295	410	230		165	125	18	4	165	125	18	4
65	285	430	290		185	145	18	4	185	145	18	4
80	335	485	310		200	160	18	8	200	160	18	8
100	320	495	350		220	180	18	8	220	180	18	8
125	420	620	400		250	210	18	8	250	210	18	8
150	485	710	480		285	240	22	8	285	240	22	8
200	485	780	600		340	295	22	8	340	295	22	12
250	565	830	730		395	350	22	12	405	355	26	12

Combinazione materiali standard – Standard materials Combination

ITEM	DENOMINAZIONE DENOMINATION	G/316 MATERIALE MATERIAL	G/B MATERIALE MATERIAL
01	Body	Cast iron UNI EN1561 EN-GJL-250	Cast iron UNI EN1561 EN-GJL-250
02	Disc (≤ DN80)	Stainless steel AISI316 UNI EN10088	Bronze UNI EN1982 G-CuSn5Zn5Pb5
02	Disc (≥ DN100)	Cast steel GP240-GH UNI EN10213 plus AISI316 facing welding	Bronze UNI EN1982 G-CuSn5Zn5Pb5
03	Inner head flange	Cast iron UNI EN1561 EN-GJL-250	Cast iron UNI EN1561 EN-GJL-250
04	Stem	Stainless steel AISI316 UNI EN10088	Stainless steel AISI316 UNI EN10088
05	Piston	Steel 9SMnPb28 UNI EN10087	Steel 9SMnPb28 UNI EN10087
06	Housing assembly	Fe52.2 GALVANIZED	Fe52.2 GALVANIZED
07	Back rod	Steel 9SMnPb28 UNI EN10087	Steel 9SMnPb28 UNI EN10087
08	Disk spring	Steel UNI EN10270	Steel UNI EN10270
09	Proximity switch	CEED BG12/2PF2 PNP CEOM E2FX2E2G NPN	CEED BG12/2PF2 PNP CEOM E2FX2E2G NPN
10	Indicator washer	Steel 9SMnPb28 UNI EN10087	Steel 9SMnPb28 UNI EN10087
11	Flange	Steel UNI C40	Steel UNI C40
12	Snap ring ø5	Stainless steel AISI316 UNI EN10088	Stainless steel AISI316 UNI EN10088
13	Collar	Fe52.2 GALVANIZED	Fe52.2 GALVANIZED
14	Shield	Stainless steel AISI316 UNI EN10088	Stainless steel AISI316 UNI EN10088

Nota: Combinazioni materiali non standard a richiesta
Note: Non standard materials combinations on request

Valvole a globo PN10DIN-PN16 con attuatore idraulico semplice effetto normalmente aperto (FO)

Globe valves NP10DIN-NP16 with hydraulic single acting actuator fail open (FO)

Tab.126G-SR-FO

Conform to:
UNI EN1092
DIN 3202

Esecuzione 01
con otturatore Com.

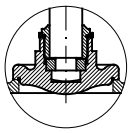

Execution 01
with SDSL disc

Esecuzione 02
con otturatore Aut.

Execution 02
with SDNR disc

con Proximity limit switch (a richiesta)
with Proximity limit switch (on request)

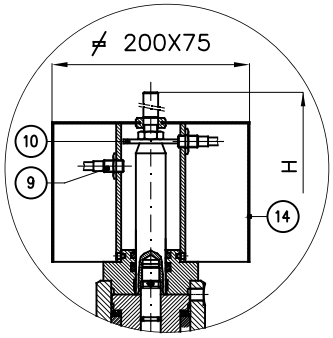

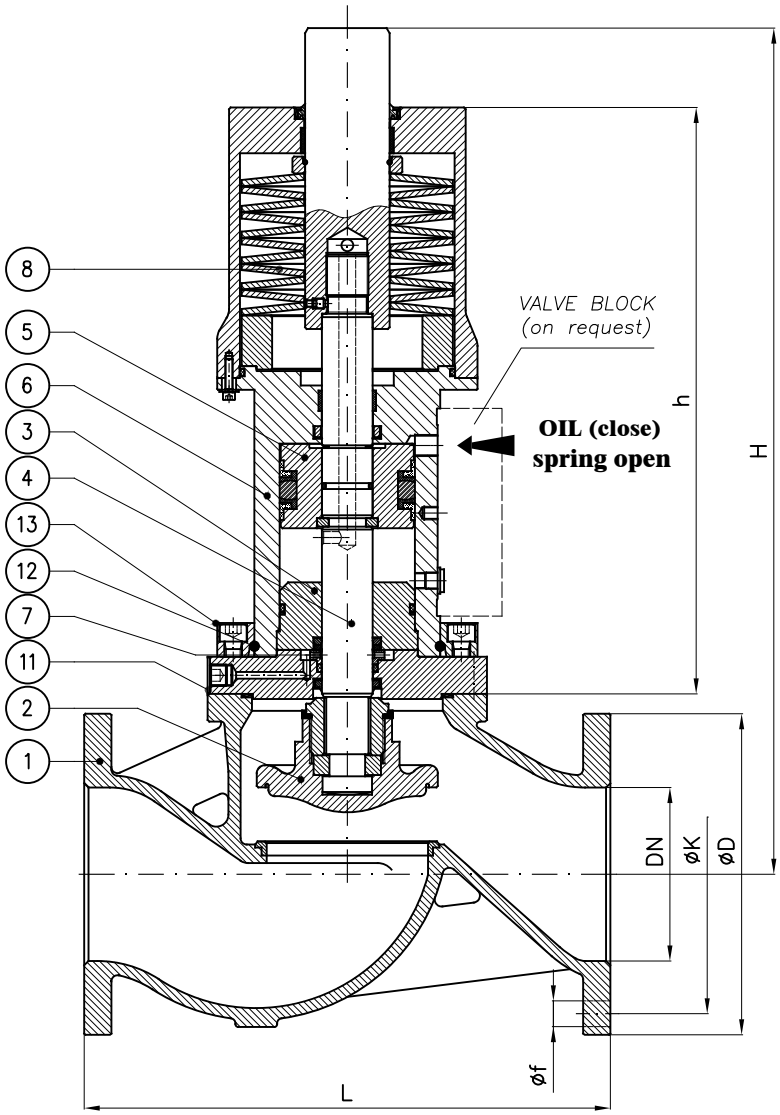

N.B.: Il dimensionamento e quindi anche l'ingombro dell'attuatore è funzione dei seguenti dati che devono sempre essere forniti:

- Pressione esercizio della valvola
- pressione olio all'attuatore
- Servizio

Note.: The size and so the overall dimension of the actuator depends by the following informations that should always be provided:

- *Valve's working pressure*
- *Oil pressure to actuator*
- *Service*

					PN10DIN				PN16			
DN	h (~)	H (~)	L	Weight (Kg)	øD	K	f	Holes NO. f	øD	K	f	Holes NO. f
32	305	410	180		140	100	18	4	140	100	18	4
40	305	410	200		150	110	18	4	150	110	18	4
50	295	410	230		165	125	18	4	165	125	18	4
65	285	430	290		185	145	18	4	185	145	18	4
80	335	485	310		200	160	18	8	200	160	18	8
100	320	495	350		220	180	18	8	220	180	18	8
125	420	620	400		250	210	18	8	250	210	18	8
150	485	710	480		285	240	22	8	285	240	22	8
200	485	780	600		340	295	22	8	340	295	22	12
250	565	830	730		395	350	22	12	405	355	26	12

Combinazione materiali standard – Standard materials Combination			
		G/316	G/B
ITEM	DENOMINAZIONE DENOMINATION	MATERIALE MATERIAL	MATERIALE MATERIAL
01	Body	Cast iron UNI EN1561 EN-GJL-250	Cast iron UNI EN1561 EN-GJL-250
02	Disc (≤ DN80)	Stainless steel AISI316 UNI EN10088	Bronze UNI EN1982 G-CuSn5Zn5Pb5
02	Disc (≥ DN100)	Cast steel GP240-GH UNI EN10213 plus AISI316 facing welding	Bronze UNI EN1982 G-CuSn5Zn5Pb5
03	Inner head flange	Cast iron UNI EN1561 EN-GJL-250	Cast iron UNI EN1561 EN-GJL-250
04	Stem	Stainless steel AISI316 UNI EN10088	Stainless steel AISI316 UNI EN10088
05	Piston	Steel 9SMnPb28 UNI EN10087	Steel 9SMnPb28 UNI EN10087
06	Housing assembly	Fe52.2 GALVANIZED	Fe52.2 GALVANIZED
07	Back rod	Steel 9SMnPb28 UNI EN10087	Steel 9SMnPb28 UNI EN10087
08	Disk spring	Steel UNI EN10270	Steel UNI EN10270
09	Proximity switch	CEED BG12/2PF2 PNP CEOM E2FX2E2G NPN	CEED BG12/2PF2 PNP CEOM E2FX2E2G NPN
10	Indicator washer	Steel 9SMnPb28 UNI EN10087	Steel 9SMnPb28 UNI EN10087
11	Flange	Steel UNI C40	Steel UNI C40
12	Snap ring ø5	Stainless steel AISI316 UNI EN10088	Stainless steel AISI316 UNI EN10088
13	Collar	Fe52.2 GALVANIZED	Fe52.2 GALVANIZED
14	Shield	Stainless steel AISI316 UNI EN10088	Stainless steel AISI316 UNI EN10088
Nota: Combinazioni materiali non standard a richiesta Note: Non standard materials combinations on request			

Valvole a via diritta - serie pesante PN10DIN-PN16
Globe valves straight type - heavy class NP10DIN-NP16

Tab.126GS

Conform to:
UNI EN1092
DIN 3202

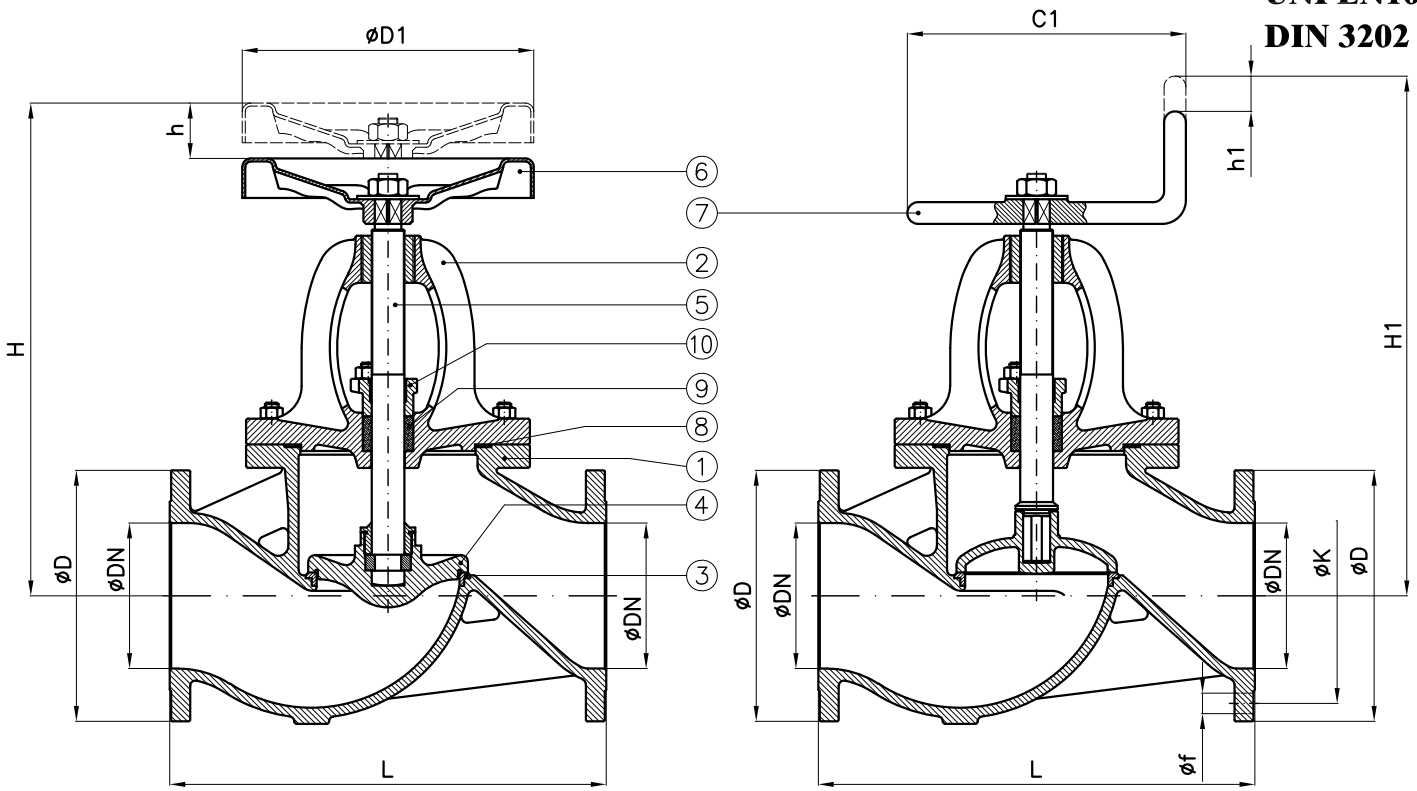

Tab.126GS-SDSL TYPE	PN10DIN	PN16
comandata (SDSL) with fixed disc (SDSL)	-	UNI 3412 UNAV 8425 NE 401130

Tab.126GS-SDNR TYPE	PN10DIN	PN16
semiautomatica (SDNR) with loose disc (SDNR)	-	UNI 3416 UNAV 8427 NE 403130

									PN10DIN				PN16			
DN	C1	D1	H SDSL (~)	h SDSL	H1 SDNR (~)	h1 SDNR	L	Weight (Kg)	D	K	f	Holes NO. f	D	K	f	Holes NO. f
15	100	100	215	12	245	8	150	3	95	65	14	4	95	65	14	4
20	100	100	215	12	245	8	150	6	105	75	14	4	105	75	14	4
25	100	100	225	14	255	9	160	8	115	85	14	4	115	85	14	4
32	125	125	245	17	275	10	180	12	140	100	18	4	140	100	18	4
40	125	125	260	20	285	12	200	12	150	110	18	4	150	110	18	4
50	125	125	275	24	300	14	230	15	165	125	18	4	165	125	18	4
65	175	175	335	32	360	18	290	23	185	145	18	4	185	145	18	4
80	175	175	345	35	370	20	310	28	200	160	18	8	200	160	18	8
100	200	200	405	45	415	28	350	41	220	180	18	8	220	180	18	8
125	225	225	450	54	455	32	400	57	250	210	18	8	250	210	18	8
150	225	300	485	62	500	38	480	77	285	240	22	8	285	240	22	8
175	250	400	565	74	595	45	550	97	315	270	22	8	315	270	22	8
200	250	400	640	82	630	50	600	129	340	295	22	8	340	295	22	12
250	300	500	720	100	710	66	730	187	395	350	22	12	405	355	26	12
300	425	575	820	118	820	85	850	262	445	400	22	12	460	410	26	12
350	500		920	130	970	90	980	378	505	460	22	16	520	470	26	16
400	575		920	135	1070	100	1100	541	565	515	26	16	580	525	30	16
450	650		1250	160	1300	115	1300		615	565	26	20	640	585	30	20
500			1400	180	1450	130	1500		670	620	26	20	715	650	33	20
600			1600	215	1650	160	1800		780	725	30	20	840	770	36	20

Combinazione materiali standard – Standard materials Combination			
		GS/316	GS/B
ITEM	DENOMINAZIONE DENOMINATION	MATERIALE MATERIAL	MATERIALE MATERIAL
01	Body	Nodular cast iron EN-GJS-400-15U UNI EN1563	Nodular cast iron EN-GJS-400-15U UNI EN1563
02	Bonnet	Nodular cast iron EN-GJS-400-15U UNI EN1563	Nodular cast iron EN-GJS-400-15U UNI EN1563
03	Body seat	Stainless steel AISI316 UNI EN10088	Stainless steel AISI316 UNI EN10088
04	Disc (≤ DN80)	Stainless steel AISI316 UNI EN10088	Bronze UNI EN1982 G-CuSn5Zn5Pb5
04	Disc (≥ DN100)	Cast steel GP240-GH UNI EN10213 plus AISI316 facing welding	Bronze UNI EN1982 G-CuSn5Zn5Pb5
05	Stem	Stainless steel AISI316 UNI EN10088	Brass CW617N (OT58)
06	Handwheel	Sheet of carbon steel	Sheet of carbon steel
07	Handle	Steel A37 UNI EN10217-1	Steel A37 UNI EN10217-1
08	Gasket	Planiflex KG carbo/C PF81	Planiflex KG carbo/C PF81
09	Packing	Carbograph GR8800	Carbograph GR8800
10	Gland bushing	Bronze UNI EN1982 G-CuSn5Zn5Pb5	Bronze UNI EN1982 G-CuSn5Zn5Pb5

Nota: Combinazioni materiali non standard a richiesta
Note: Non standard materials combinations on request

Valvole a globo PN10DIN-PN16 con attuatore idraulico doppio effetto
Globe valves NP10DIN-NP16 with hydraulic double acting actuator

Tab.126GS-DA

(Ex Tab. 129/1-DA)

Conform to:
UNI EN1092
DIN 3202

Esecuzione 01
con otturatore Com.

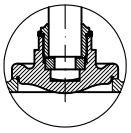

Execution 01
with SDSL disc

Esecuzione 02
con otturatore Aut.

Execution 02
with SDNR disc

con Proximity limit switch (a richiesta)
with Proximity limit switch (on request)

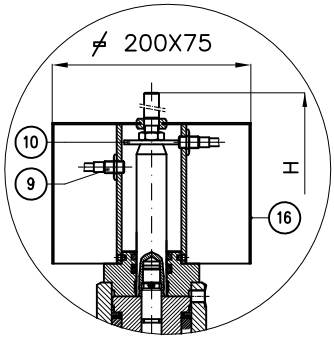

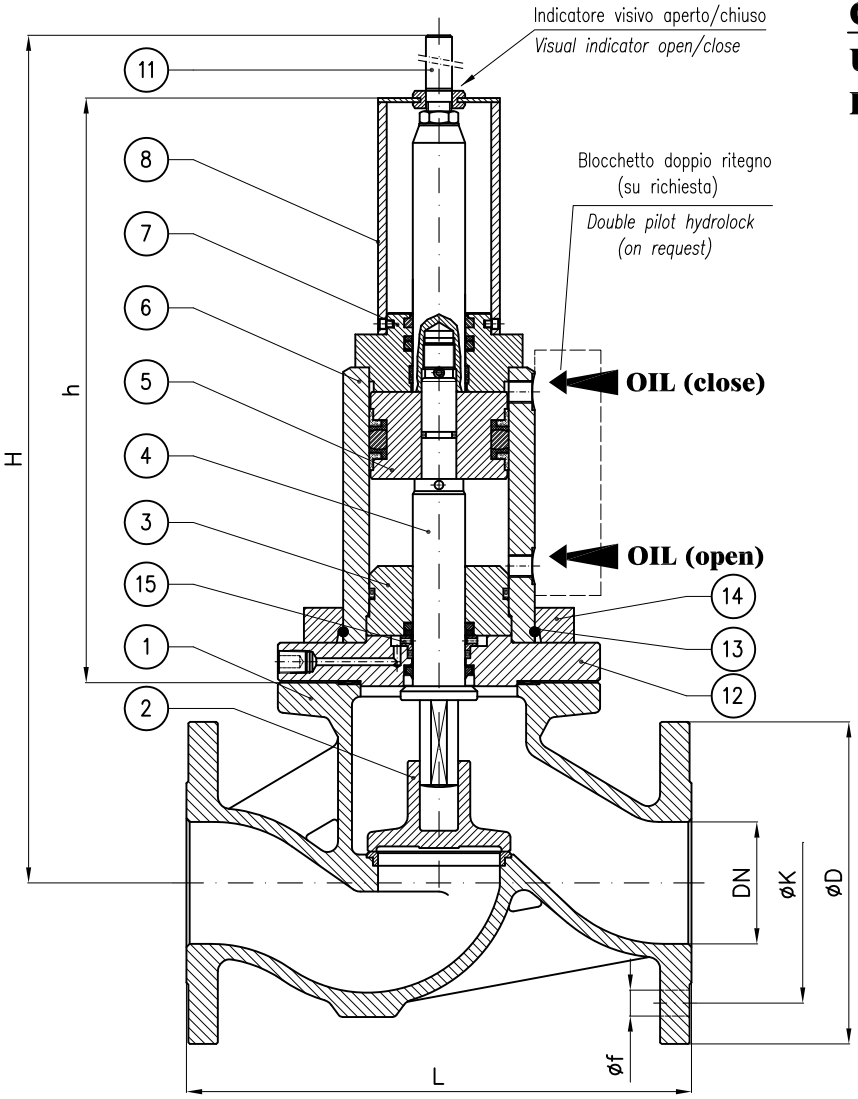

N.B.: Il dimensionamento e quindi anche l'ingombro dell'attuatore è funzione dei seguenti dati che devono sempre essere forniti:

- Pressione esercizio della valvola
- pressione olio all'attuatore
- Servizio

Note.: The size and so the overall dimension of the actuator depends by the following informations that should always be provided:

- *Valve's working pressure*
- *Oil pressure to actuator*
- *Service*

					PN10DIN				PN16			
DN	h (~)	H (~)	L	Weight (Kg)	øD	K	f	Holes NO. f	øD	K	f	Holes NO. f
20	210	280	150		105	75	14	4	105	75	14	4
25	210	290	160		115	85	14	4	115	85	14	4
32	335	440	180		140	100	18	4	140	100	18	4
40	335	445	200		150	110	18	4	150	110	18	4
50	320	445	230		165	125	18	4	165	125	18	4
65	315	475	290		185	145	18	4	185	145	18	4
80	340	490	310		200	160	18	8	200	160	18	8
100	340	515	350		220	180	18	8	220	180	18	8
125	360	565	400		250	210	18	8	250	210	18	8
150	360	585	480		285	240	22	8	285	240	22	8
200	440	760	600		340	295	22	8	340	295	22	12
250	440	780	730		395	350	22	12	405	355	26	12
300	525	975	850		445	400	22	12	460	410	26	12

Combinazione materiali standard – Standard materials Combination

		GS/316	GS/B
ITEM	DENOMINAZIONE DENOMINATION	MATERIALE MATERIAL	MATERIALE MATERIAL
01	Body	Nodular cast iron EN-GJS-400-15U UNI EN1563	Nodular cast iron EN-GJS-400-15U UNI EN1563
02	Disc (≤ DN80)	Stainless steel AISI316 UNI EN10088	Bronze UNI EN1982 G-CuSn5Zn5Pb5
02	Disc (≥ DN100)	Cast steel GP240-GH UNI EN10213 plus AISI316 facing welding	Bronze UNI EN1982 G-CuSn5Zn5Pb5
03	Inner head flange	Cast iron UNI EN1561 EN-GJL-250	Cast iron UNI EN1561 EN-GJL-250
04	Stem	Stainless steel AISI316 UNI EN10088	Stainless steel AISI316 UNI EN10088
05	Piston	Steel 9SMnPb28 UNI EN10087	Steel 9SMnPb28 UNI EN10087
06	Housing welded assembly	Fe52.2 GALVANIZED	Fe52.2 GALVANIZED
07	Head flange	Steel UNI C40	Steel UNI C40
08	Proximity switch support	Fe37 GALVANIZED	Fe37 GALVANIZED
09	Proximity switch	CEED BG12/2PF2 PNP CEOM E2FX2E2G NPN	CEED BG12/2PF2 PNP CEOM E2FX2E2G NPN
10	Indicator washer	Steel 9SMnPb28 UNI EN10087	Steel 9SMnPb28 UNI EN10087
11	Index open/close	Brass CW617N (OT58)	Brass CW617N (OT58)
12	Flange	Steel UNI C40	Steel UNI C40
13	Snap ring ø5	Stainless steel AISI316 UNI EN10088	Stainless steel AISI316 UNI EN10088
14	Collar	Fe52.2 GALVANIZED	Fe52.2 GALVANIZED
15	Back rod	Steel 9SMnPb28 UNI EN10087	Steel 9SMnPb28 UNI EN10087
16	Shield	Stainless steel AISI316 UNI EN10088	Stainless steel AISI316 UNI EN10088

Nota: Combinazioni materiali non standard a richiesta
Note: Non standard materials combinations on request

Valvole a globo PN10DIN-PN16 con attuatore idraulico semplice effetto normalmente chiuso (FC)

Globe valves NP10DIN-NP16 with hydraulic single acting actuator fail close (FC)

Tab.126GS-SR-FC

(Ex Tab. 129/1-SR-FC)

Conform to:
UNI EN1092
DIN 3202

Esecuzione 01
con otturatore Com.

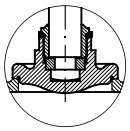

Execution 01
with SDSL disc

Esecuzione 02
con otturatore Aut.

Execution 02
with SDNR disc

con Proximity limit switch (a richiesta)
with Proximity limit switch (on request)

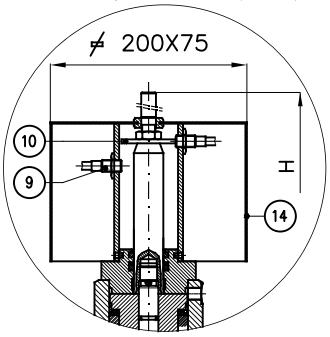

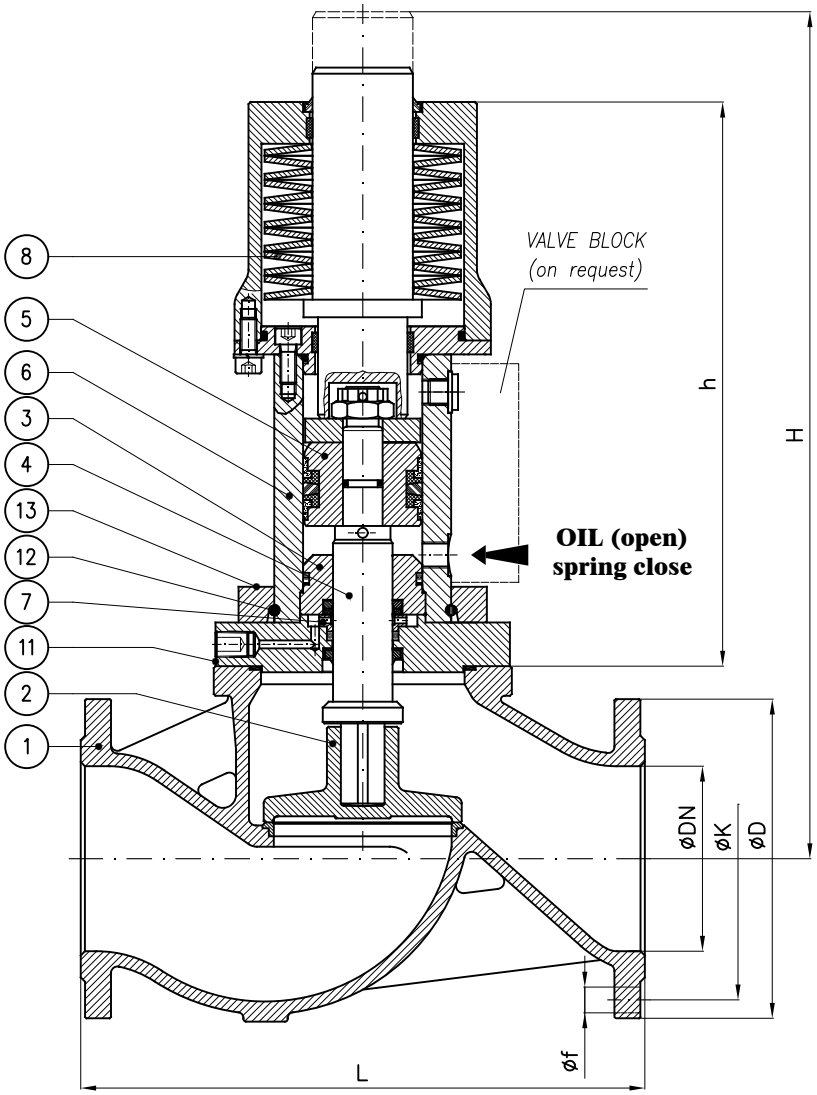

N.B.: Il dimensionamento e quindi anche l'ingombro dell'attuatore è funzione dei seguenti dati che devono sempre essere forniti:

- Pressione esercizio della valvola
- pressione olio all'attuatore
- Servizio

Note.: The size and so the overall dimension of the actuator depends by the following informations that should always be provided:

- *Valve's working pressure*
- *Oil pressure to actuator*
- *Service*

					PN10DIN				PN16			
DN	h (~)	H (~)	L	Weight (Kg)	øD	K	f	Holes NO. f	øD	K	f	Holes NO. f
32	305	410	180		140	100	18	4	140	100	18	4
40	305	410	200		150	110	18	4	150	110	18	4
50	295	410	230		165	125	18	4	165	125	18	4
65	285	430	290		185	145	18	4	185	145	18	4
80	335	485	310		200	160	18	8	200	160	18	8
100	320	495	350		220	180	18	8	220	180	18	8
125	420	620	400		250	210	18	8	250	210	18	8
150	485	710	480		285	240	22	8	285	240	22	8
200	485	780	600		340	295	22	8	340	295	22	12
250	565	830	730		395	350	22	12	405	355	26	12

Combinazione materiali standard – Standard materials Combination			
		GS/316	GS/B
ITEM	DENOMINAZIONE DENOMINATION	MATERIALE MATERIAL	MATERIALE MATERIAL
01	Body	Nodular cast iron EN-GJS-400-15U UNI EN1563	Nodular cast iron EN-GJS-400-15U UNI EN1563
02	Disc (≤ DN80)	Stainless steel AISI316 UNI EN10088	Bronze UNI EN1982 G-CuSn5Zn5Pb5
02	Disc (≥ DN100)	Cast steel GP240-GH UNI EN10213 plus AISI316 facing welding	Bronze UNI EN1982 G-CuSn5Zn5Pb5
03	Inner head flange	Cast iron UNI EN1561 EN-GJL-250	Cast iron UNI EN1561 EN-GJL-250
04	Stem	Stainless steel AISI316 UNI EN10088	Stainless steel AISI316 UNI EN10088
05	Piston	Steel 9SMnPb28 UNI EN10087	Steel 9SMnPb28 UNI EN10087
06	Housing assembly	Fe52.2 GALVANIZED	Fe52.2 GALVANIZED
07	Back rod	Steel 9SMnPb28 UNI EN10087	Steel 9SMnPb28 UNI EN10087
08	Disk spring	Steel UNI EN10270	Steel UNI EN10270
09	Proximity switch	CEED BG12/2PF2 PNP CEOM E2FX2E2G NPN	CEED BG12/2PF2 PNP CEOM E2FX2E2G NPN
10	Indicator washer	Steel 9SMnPb28 UNI EN10087	Steel 9SMnPb28 UNI EN10087
11	Flange	Steel UNI C40	Steel UNI C40
12	Snap ring ø5	Stainless steel AISI316 UNI EN10088	Stainless steel AISI316 UNI EN10088
13	Collar	Fe52.2 GALVANIZED	Fe52.2 GALVANIZED
14	Shield	Stainless steel AISI316 UNI EN10088	Stainless steel AISI316 UNI EN10088
Nota: Combinazioni materiali non standard a richiesta Note: Non standard materials combinations on request			

Valvole a globo PN10DIN-PN16 con attuatore idraulico semplice effetto normalmente aperto (FO)

Globe valves NP10DIN-NP16 with hydraulic single acting actuator fail open (FO)

Tab.126GS-SR-FO

(Ex Tab. 129/1-SR-FO)

Conform to:

UNI EN1092

DIN 3202

Esecuzione 01
con otturatore Com.

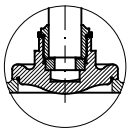

Execution 01
with SDSL disc

Esecuzione 02
con otturatore Aut.

Execution 02
with SDNR disc

con Proximity limit switch (a richiesta)
with Proximity limit switch (on request)

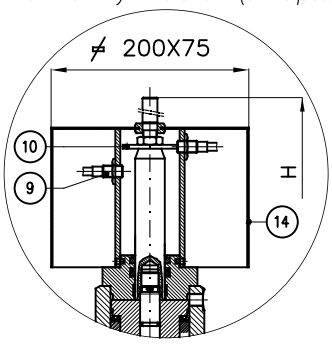

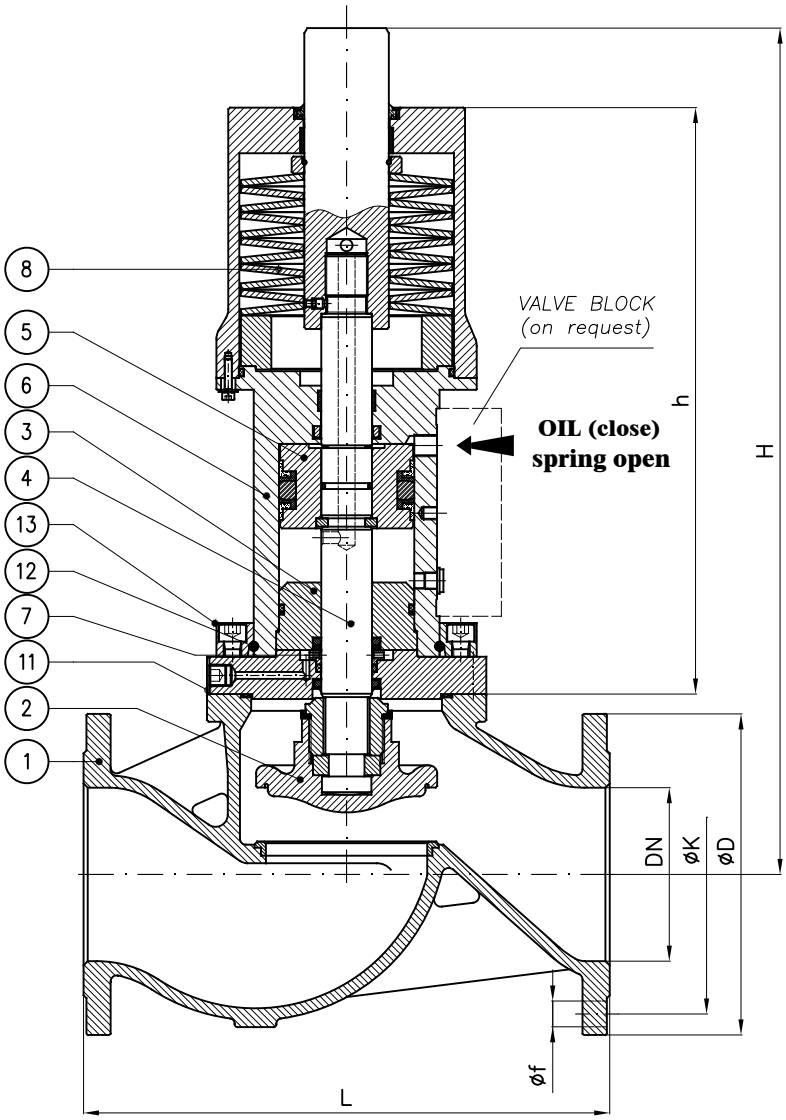

N.B.: Il dimensionamento e quindi anche l'ingombro dell'attuatore è funzione dei seguenti dati che devono sempre essere forniti:

- Pressione esercizio della valvola
- pressione olio all'attuatore
- Servizio

Note.: The size and so the overall dimension of the actuator depends by the following informations that should always be provided:

- *Valve's working pressure*
- *Oil pressure to actuator*
- *Service*

					PN10DIN				PN16			
DN	h (~)	H (~)	L	Weight (Kg)	øD	K	f	Holes NO. f	øD	K	f	Holes NO. f
32	305	410	180		140	100	18	4	140	100	18	4
40	305	410	200		150	110	18	4	150	110	18	4
50	295	410	230		165	125	18	4	165	125	18	4
65	285	430	290		185	145	18	4	185	145	18	4
80	335	485	310		200	160	18	8	200	160	18	8
100	320	495	350		220	180	18	8	220	180	18	8
125	420	620	400		250	210	18	8	250	210	18	8
150	485	710	480		285	240	22	8	285	240	22	8
200	485	780	600		340	295	22	8	340	295	22	12
250	565	830	730		395	350	22	12	405	355	26	12

Combinazione materiali standard – Standard materials Combination			
		GS/316	GS/B
ITEM	DENOMINAZIONE DENOMINATION	MATERIALE MATERIAL	MATERIALE MATERIAL
01	Body	Nodular cast iron EN-GJS-400-15U UNI EN1563	Nodular cast iron EN-GJS-400-15U UNI EN1563
02	Disc (≤ DN80)	Stainless steel AISI316 UNI EN10088	Bronze UNI EN1982 G-CuSn5Zn5Pb5
02	Disc (≥ DN100)	Cast steel GP240-GH UNI EN10213 plus AISI316 facing welding	Bronze UNI EN1982 G-CuSn5Zn5Pb5
03	Inner head flange	Cast iron UNI EN1561 EN-GJL-250	Cast iron UNI EN1561 EN-GJL-250
04	Stem	Stainless steel AISI316 UNI EN10088	Stainless steel AISI316 UNI EN10088
05	Piston	Steel 9SMnPb28 UNI EN10087	Steel 9SMnPb28 UNI EN10087
06	Housing assembly	Fe52.2 GALVANIZED	Fe52.2 GALVANIZED
07	Back rod	Steel 9SMnPb28 UNI EN10087	Steel 9SMnPb28 UNI EN10087
08	Disk spring	Steel UNI EN10270	Steel UNI EN10270
09	Proximity switch	CEED BG12/2PF2 PNP CEOM E2FX2E2G NPN	CEED BG12/2PF2 PNP CEOM E2FX2E2G NPN
10	Indicator washer	Steel 9SMnPb28 UNI EN10087	Steel 9SMnPb28 UNI EN10087
11	Flange	Steel UNI C40	Steel UNI C40
12	Snap ring ø5	Stainless steel AISI316 UNI EN10088	Stainless steel AISI316 UNI EN10088
13	Collar	Fe52.2 GALVANIZED	Fe52.2 GALVANIZED
14	Shield	Stainless steel AISI316 UNI EN10088	Stainless steel AISI316 UNI EN10088
Nota: Combinazioni materiali non standard a richiesta Note: Non standard materials combinations on request			

Valvole di intercettazione JIS standard 5K
Globe valves JIS standard 5K

Tab.184/4

ESEC. SEMIAUTOMATICA
EXEC. SDNR

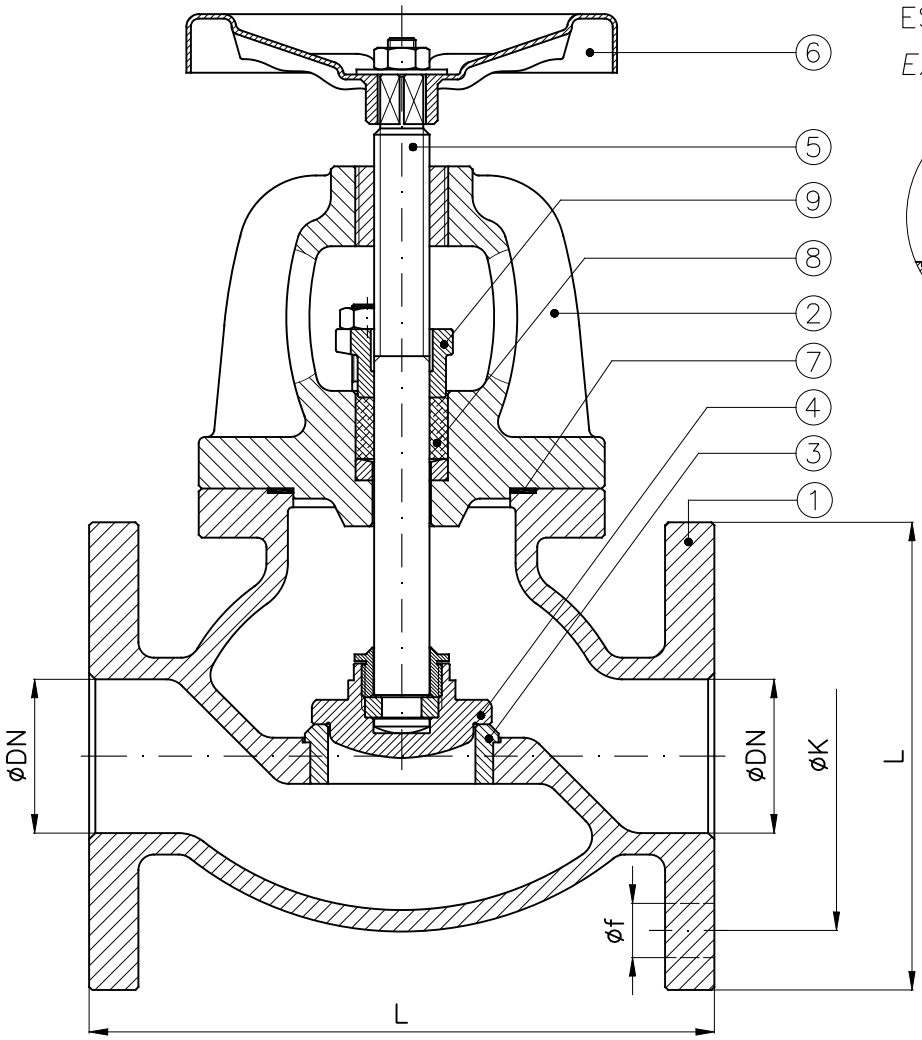

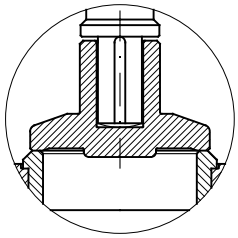

DN	L	D	K	f	Holes NO. f	Weight (Kg)
50	210	130	105	15	4	13
65	250	155	130	15	4	21
80	280	180	145	19	4	26

Combinazione materiali standard – Standard materials Combination							
		G/316	G/420	G/B	GS/316	GS/420	GS/B
ITEM	DENOMINAZIONE DENOMINATION	MATERIALE MATERIAL	MATERIALE MATERIAL	MATERIALE MATERIAL	MATERIALE MATERIAL	MATERIALE MATERIAL	MATERIALE MATERIAL
01	Body	Cast iron UNI EN1561 EN-GJL-250	Cast iron UNI EN1561 EN-GJL-250	Cast iron UNI EN1561 EN-GJL-250	Nodular cast iron EN-GJS-400-15U UNI EN1563	Nodular cast iron EN-GJS-400-15U UNI EN1563	Nodular cast iron EN-GJS-400-15U UNI EN1563
02	Bonnet	Cast iron UNI EN1561 EN-GJL-250	Cast iron UNI EN1561 EN-GJL-250	Cast iron UNI EN1561 EN-GJL-250	Nodular cast iron EN-GJS-400-15U UNI EN1563	Nodular cast iron EN-GJS-400-15U UNI EN1563	Nodular cast iron EN-GJS-400-15U UNI EN1563
03	Body seat	Stainless steel AISI316 UNI EN10088	Stainless steel AISI420 UNI EN10088	Stainless steel AISI316 UNI EN10088	Stainless steel AISI316 UNI EN10088	Stainless steel AISI420 UNI EN10088	Stainless steel AISI316 UNI EN10088
04	Disc	Stainless steel AISI316 UNI EN10088	Stainless steel AISI420 UNI EN10088	Bronze UNI EN1982 G-CuSn5Zn5Pb5	Stainless steel AISI316 UNI EN10088	Stainless steel AISI420 UNI EN10088	Bronze UNI EN1982 G-CuSn5Zn5Pb5
05	Stem	Stainless steel AISI316 UNI EN10088	Stainless steel AISI420 UNI EN10088	Brass CW617N (OT58)	Stainless steel AISI316 UNI EN10088	Stainless steel AISI420 UNI EN10088	Brass CW617N (OT58)
06	Handwheel	Sheet of carbon steel	Sheet of carbon steel	Sheet of carbon steel	Sheet of carbon steel	Sheet of carbon steel	Sheet of carbon steel
07	Gasket	Planiflex KG carbo/C PF81	Planiflex KG carbo/C PF81	Planiflex KG carbo/C PF81	Planiflex KG carbo/C PF81	Planiflex KG carbo/C PF81	Planiflex KG carbo/C PF81
08	Packing	Carbograph GR8800	Carbograph GR8800	Carbograph GR8800	Carbograph GR8800	Carbograph GR8800	Carbograph GR8800
09	Gland bushing	Brass CW509L (OT60)	Brass CW509L (OT60)	Brass CW509L (OT60)	Brass CW509L (OT60)	Brass CW509L (OT60)	Brass CW509L (OT60)

Nota: Combinazioni materiali non standard a richiesta
Note: Non standard materials combinations on request

Valvole a via diritta - serie PN40 UNI2443 (UNAV8391)
Globe valves straight type - NP40 class UNI2443 (UNAV8391)

Tab.184VD

RF FLANGES: A
FF FLANGES: B

Conform to:
UNI EN1092
DIN 3202

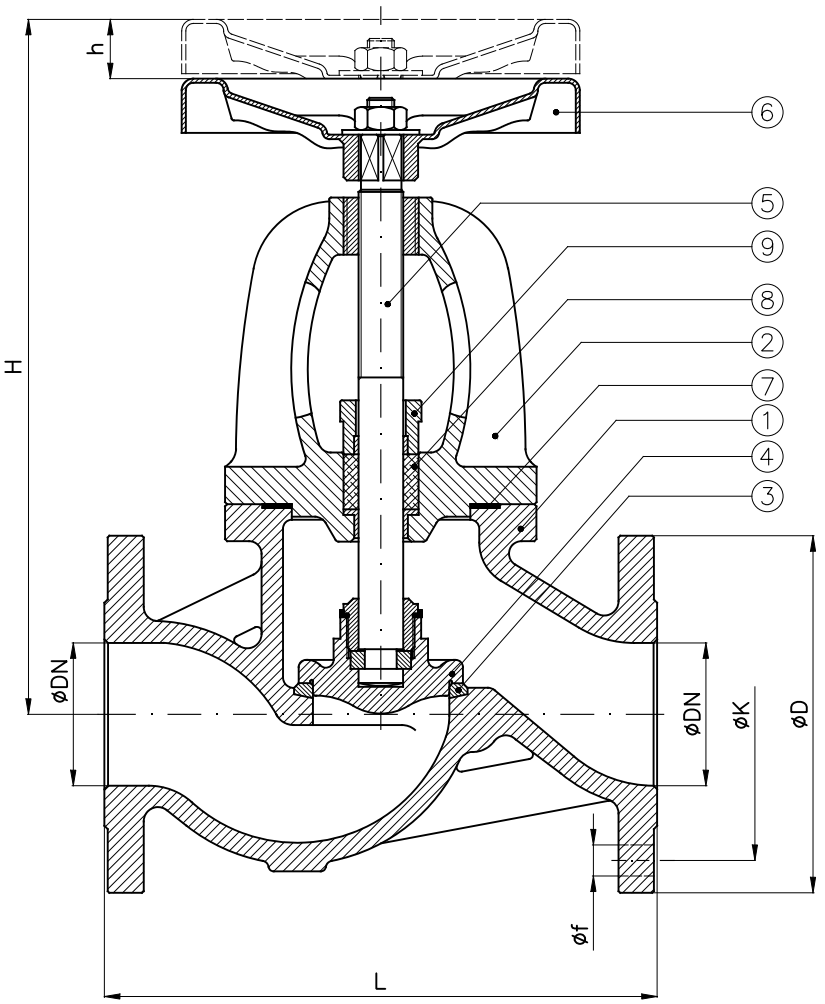

Esecuzioni a richiesta
On request executions

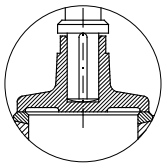

1) Otturatore semiautomatico
SDNR disc

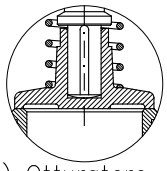

2) Otturatore semiautomatico con molla
SDNR disc with spring loaded

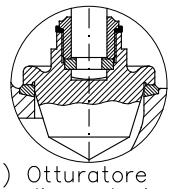

3) Otturatore di regolazione tronco conico
Tapered frustum regulating disc

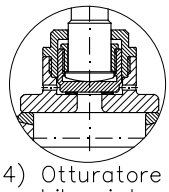

4) Otturatore bilanciato
Balanced disc

DN	H (~)	h (~)	L	D	K	f	Holes NO. f	Weight (Kg)
15	185	10	130	95	65	14	4	5
20	205	10	150	105	75	14	4	6
25	225	15	160	115	85	14	4	7
32	245	20	180	140	100	18	4	11
40	285	25	200	150	110	18	4	14
50	320	30	230	165	125	18	4	18
65	365	35	290	185	145	18	8	27
80	375	35	310	200	160	18	8	32.5
100	425	40	350	235	190	22	8	45
125	460	50	400	270	220	26	8	62
150	560	60	480	300	250	26	8	88
175	585	65	550	350	295	29	12	129
200	620	75	600	375	320	29	12	161
250	765	85	730	450	385	33	12	270
300	920	100	850	515	450	33	16	410

Combinazione materiali standard – Standard materials Combination

		A/316	A/420	CF8M/316	B/316	B/B
ITEM	DENOMINAZIONE DENOMINATION	MATERIALE MATERIAL	MATERIALE MATERIAL	MATERIALE MATERIAL	MATERIALE MATERIAL	MATERIALE MATERIAL
01	Body	Cast steel GP240-GH UNI EN10213	Cast steel GP240-GH UNI EN10213	Stainless steel CF8M ASTM A351	Bronze UNI EN1982 G-CuSn5Zn5Pb5	Bronze UNI EN1982 G-CuSn5Zn5Pb5
02	Bonnet	Cast steel GP240-GH UNI EN10213	Cast steel GP240-GH UNI EN10213	Stainless steel CF8M ASTM A351	Bronze UNI EN1982 G-CuSn5Zn5Pb5	Bronze UNI EN1982 G-CuSn5Zn5Pb5
03	Body seat	Stainless steel AISI316 UNI EN10088	Stainless steel AISI420 UNI EN10088	Stainless steel AISI316 UNI EN10088	Bronze UNI EN1982 G-CuSn5Zn5Pb5	Bronze UNI EN1982 G-CuSn5Zn5Pb5
04	Disc (≤ DN80)	Stainless steel AISI316 UNI EN10088	Stainless steel AISI420 UNI EN10088	Stainless steel AISI316 UNI EN10088	Stainless steel AISI316 UNI EN10088	Bronze UNI EN1982 G-CuSn5Zn5Pb5
04	Disc (≥ DN100)	Cast steel GP240-GH UNI EN10213 plus AISI316 facing welding	Cast steel GP240-GH UNI EN10213 plus AISI308 facing welding	Stainless steel CF8M ASTM A351	Stainless steel CF8M ASTM A351	Bronze UNI EN1982 G-CuSn5Zn5Pb5
05	Stem	Stainless steel AISI316 UNI EN10088	Stainless steel AISI420 UNI EN10088	Stainless steel AISI316 UNI EN10088	Stainless steel AISI316 UNI EN10088	Brass CW617N (OT58)
06	Handwheel	Sheet of carbon steel	Sheet of carbon steel	Sheet of carbon steel	Sheet of carbon steel	Sheet of carbon steel
07	Gasket	Planiflex KG carbo/C PF81	Planiflex KG carbo/C PF81	Planiflex KG carbo/C PF81	Planiflex KG carbo/C PF81	Planiflex KG carbo/C PF81
08	Packing	Carbograph GR8800	Carbograph GR8800	Carbograph GR8800	Carbograph GR8800	Carbograph GR8800
09	Gland bushing	Steel Fe360B (S235JRC) UNI EN10025	Steel Fe360B (S235JRC) UNI EN10025	Stainless steel AISI316 UNI EN10088	Brass CW509L (OT60)	Brass CW509L (OT60)

Nota: Combinazioni materiali non standard a richiesta
Note: Non standard materials combinations on request

Valvole a globo "Union Bonnet" sede metallica PN25
Globe valves "Union Bonnet" metal sealing seat NP25

Art.1

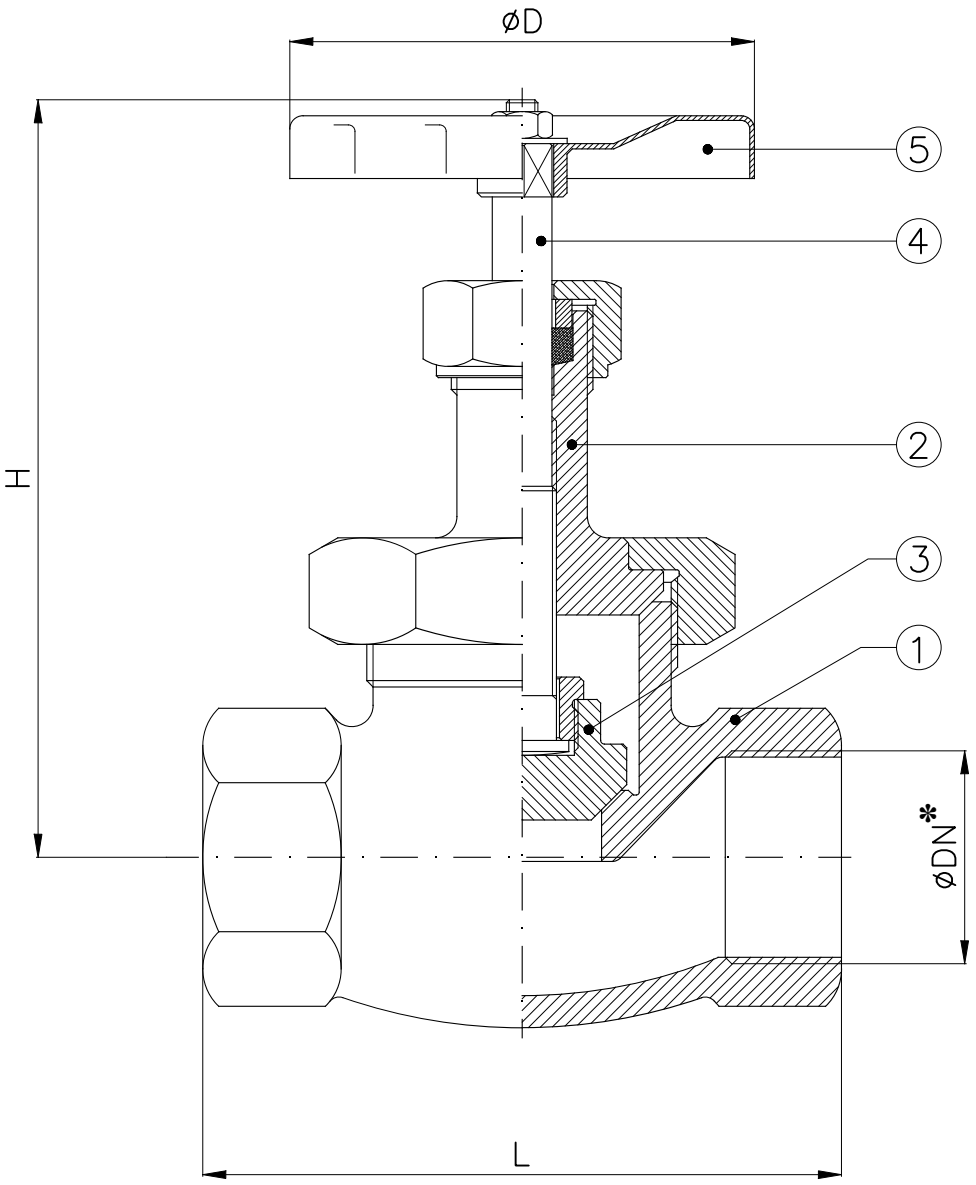

✻: Filettatura GAS
✻: *BSPP threaded*

DN	H	L	Weight (Kg)
1/4"	88	54	0.34
3/8"	88	54	0.34
1/2"	86	64	0.48
3/4"	101	79	0.78
1"	115	88	1.1
1"1/4	137	102	1.7
1"1/2	140	120	2.5
2"	163	137	3.7

Combinazione materiali standard – Standard materials Combination		
		B/O
ITEM	DENOMINAZIONE DENOMINATION	MATERIALE MATERIAL
01	Body	Bronze UNI EN1982 G-CuSn5Zn5Pb5
02	Bonnet	Brass CW617N (OT58)
03	Disc	Brass CW617N (OT58)
04	Stem	Brass CW617N (OT58)
05	Handwheel	Aluminium
Nota: Combinazioni materiali non standard a richiesta Note: Non standard materials combinations on request		

Valvole a globo sede metallica o teflon PN16
Globe valves metal sealing or PTFE seat NP16

Art.2

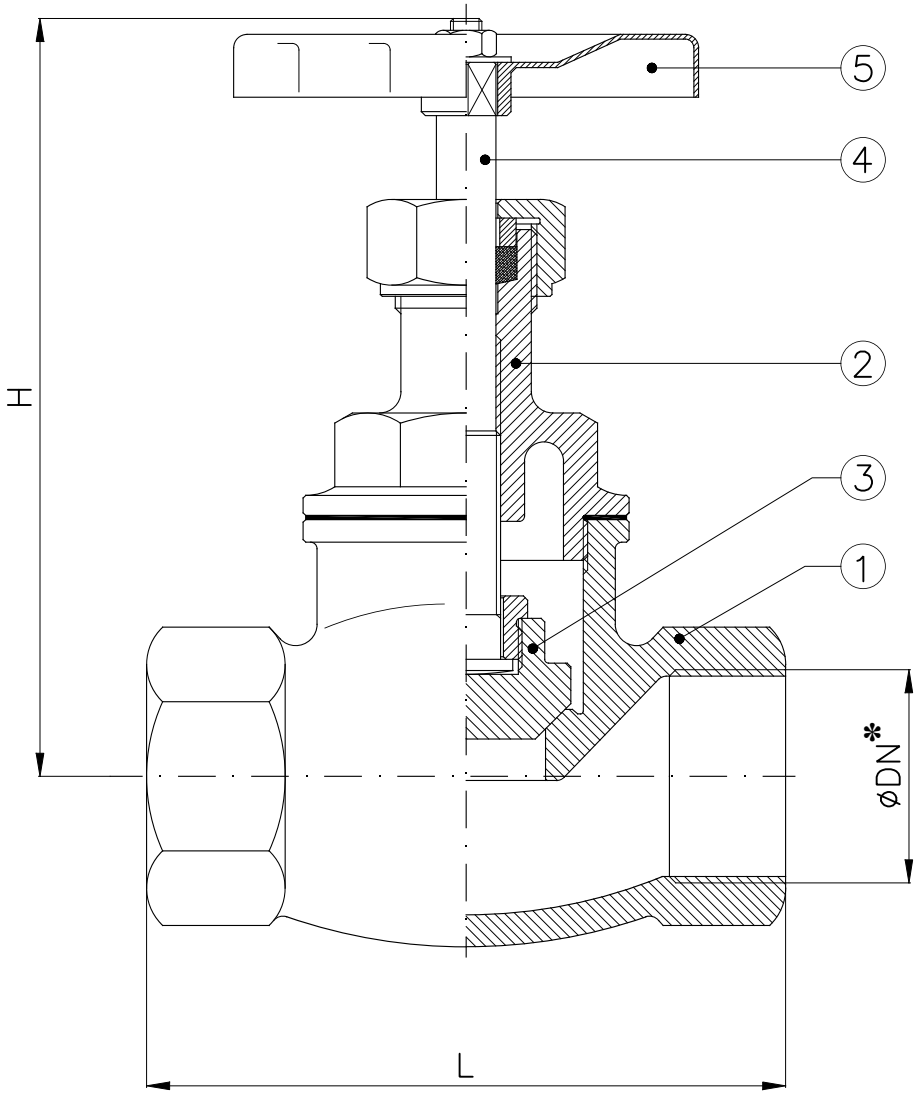

*: Filettatura GAS

*: *BSPP threaded*

DN	H	L	Weight (Kg)
1/4"	78	54	0.29
3/8"	78	54	0.29
1/2"	78	58	0.37
3/4"	91	71	0.6
1"	101	80.5	0.85
1"1/4	118	94.5	1.35
1"1/2	137	103	1.8
2"	152	127	2.8
2"1/2	213	155	5.5
3"	230	171	7.7
4"	260	199	10.7

Combinazione materiali standard – Standard materials Combination		
		B/O
ITEM	DENOMINAZIONE DENOMINATION	MATERIALE MATERIAL
01	Body	Bronze UNI EN1982 G-CuSn5Zn5Pb5
02	Bonnet	Brass CW617N (OT58)
03	Disc	Brass CW617N (OT58)
04	Stem	Brass CW617N (OT58)
05	Handwheel	Aluminium
Nota: Combinazioni materiali non standard a richiesta Note: Non standard materials combinations on request		

Valvole di regolazione con otturatore a spillo PN16
Regulating valves with needle disc NP16

Art.3

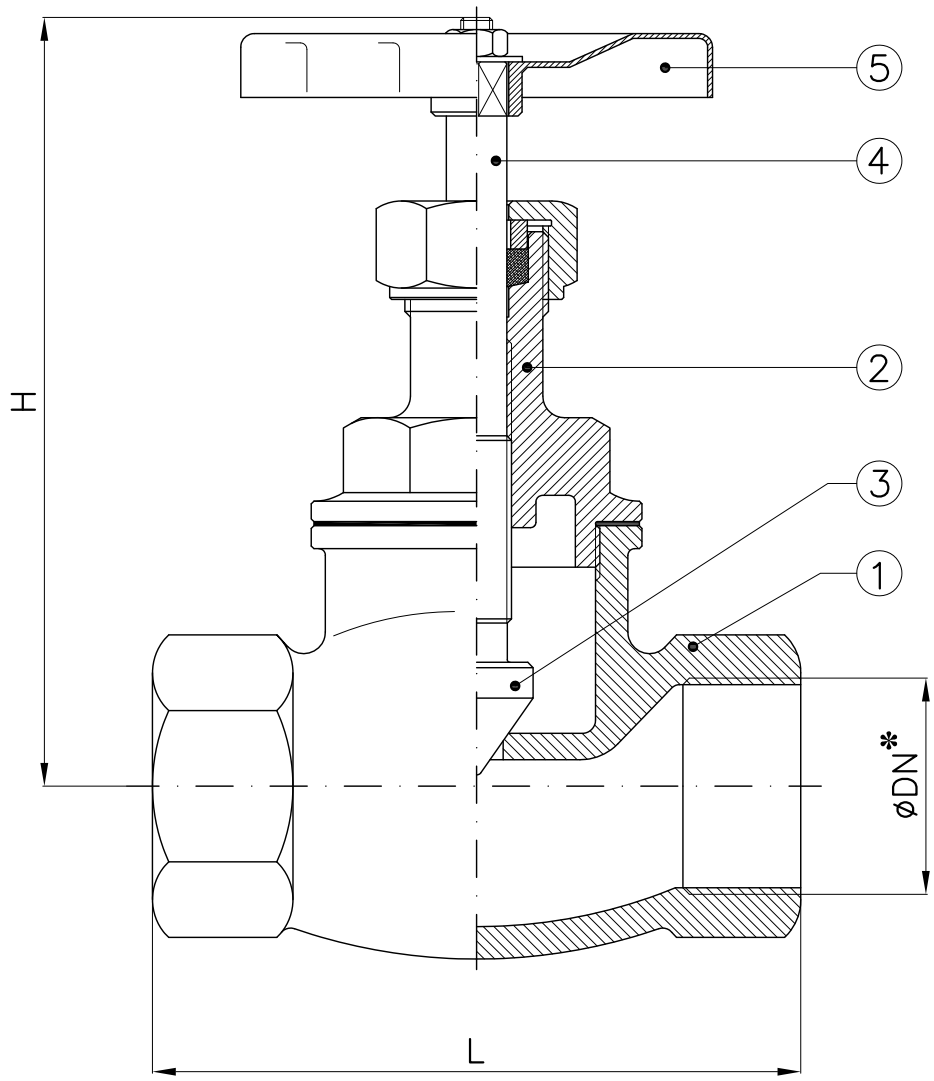

*: Filettatura GAS
*: *BSPP threaded*

DN	H	L	Weight (Kg)
1/4"	78	54	0.29
3/8"	78	54	0.29
1/2"	80	58	0.37
3/4"	91	71	0.6
1"	101	80.5	0.85
1"1/4	122	94.5	1.35
1"1/2	123	103	1.8
2"	152	127	2.8
2"1/2	213	155	5.5
3"	230	171	7.7
4"	270	200	10.7

Combinazione materiali standard – Standard materials Combination		
		B/O
ITEM	DENOMINAZIONE DENOMINATION	MATERIALE MATERIAL
01	Body	Bronze UNI EN1982 G-CuSn5Zn5Pb5
02	Bonnet	Brass CW617N (OT58)
03	Disc	Brass CW617N (OT58)
04	Stem	Brass CW617N (OT58)
05	Handwheel	Aluminium
Nota: Combinazioni materiali non standard a richiesta Note: Non standard materials combinations on request		

Valvole a globo sede metallica o teflon PN16
Globe valves, metal sealing seat or PTFE seat NP16

Art.5

Conform to:
UNI EN1092

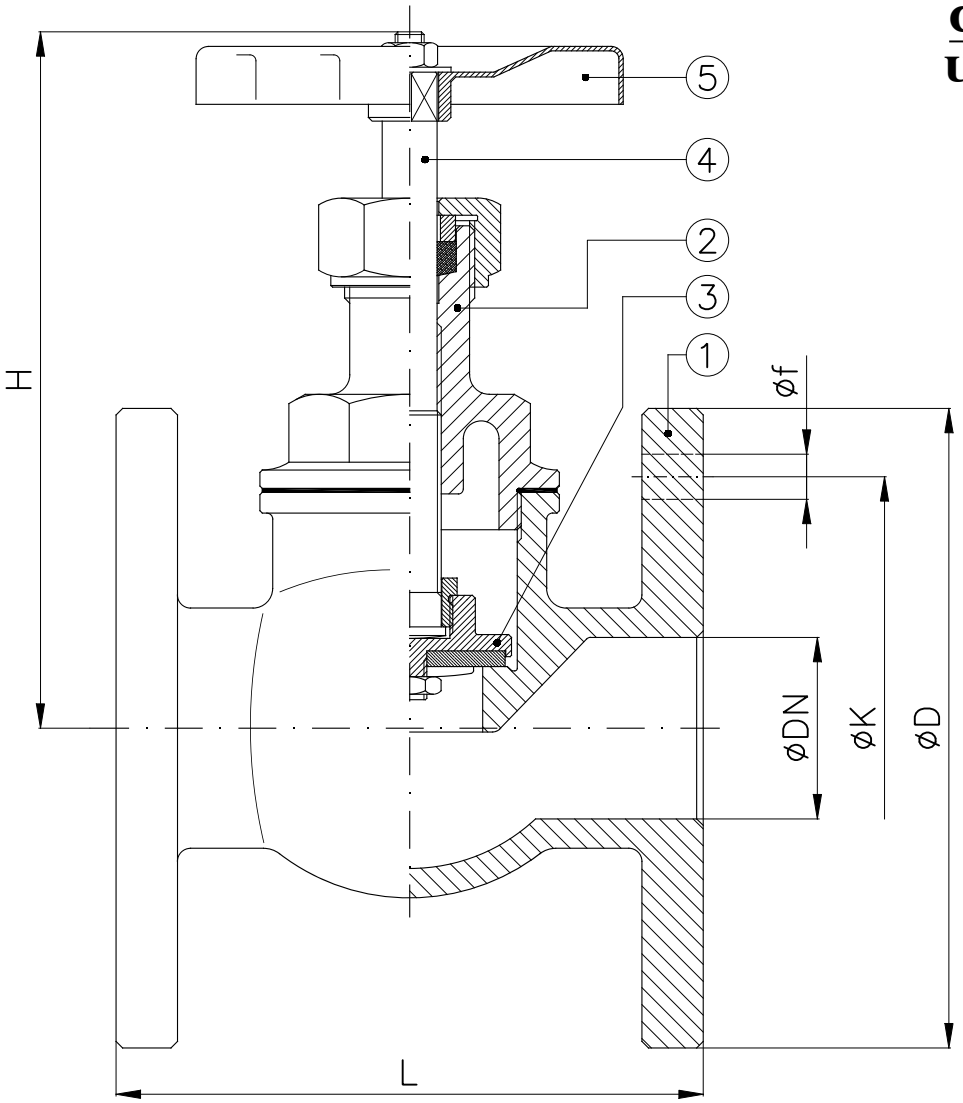

DN	H	L	D	K	f	Holes No. f	Weight (Kg)
15	80	70	95	65	14	4	1.4
20	95	90	105	75	14	4	2
25	110	99	115	85	14	4	2.6
32	120	108	140	100	18	4	3.8
40	135	130	150	110	18	4	4.6
50	155	147	165	125	18	4	6.4
65	220	190	185	145	18	4	10.5
80	235	208	200	160	18	8	13
100	260	220	220	180	18	8	18.5

Combinazione materiali standard – Standard materials Combination		
		B/O
ITEM	DENOMINAZIONE DENOMINATION	MATERIALE MATERIAL
01	Body	Bronze UNI EN1982 G-CuSn5Zn5Pb5
02	Bonnet	Brass CW617N (OT58)
03	Disc	Brass CW617N (OT58)
04	Stem	Brass CW617N (OT58)
05	Handwheel	Aluminium
Nota: Combinazioni materiali non standard a richiesta Note: Non standard materials combinations on request		

Valvole a globo classe 200 psi in acciaio inox AISI316
Class 200 psi globe valves stainless steel AISI316

Art.2028

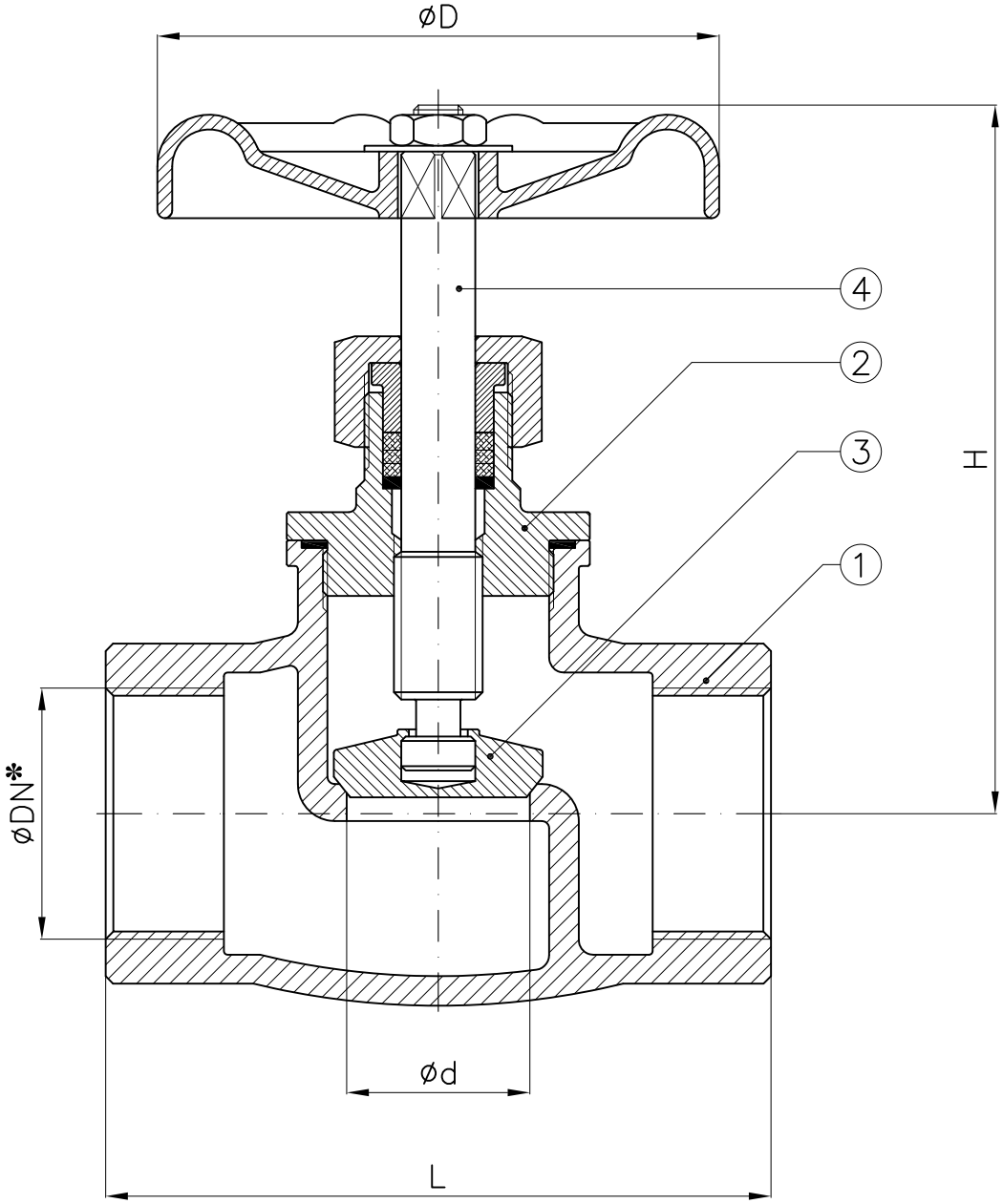

*: Filettatura GAS

*: *BSPP threaded*

DN	D	d	H (aperta/open)	L
1/4"	60	10	100	65
3/8"	60	12	100	65
1/2"	70	15	100	65
3/4"	70	20	106	80
1"	80	25	118	90
1"1/4	80	32	134	105
1"1/2	90	40	152	120
2"	100	50	172	140

Combinazione materiali standard – Standard materials Combination		
		CF8M/316
ITEM	DENOMINAZIONE DENOMINATION	MATERIALE MATERIAL
01	Body	Stainless steel CF8M ASTM A351
02	Bonnet	Stainless steel AISI316 UNI EN10088
03	Disc	Stainless steel AISI316 UNI EN10088
04	Stem	Stainless steel AISI316 UNI EN10088
Nota: Combinazioni materiali non standard a richiesta Note: Non standard materials combinations on request		

Valvole a globo union bonnet PN25 sede metallica filettate GAS-NPT
Globe valves union bonnet NP25 metal sealing seat threaded GAS-NPT

Art.1-RV

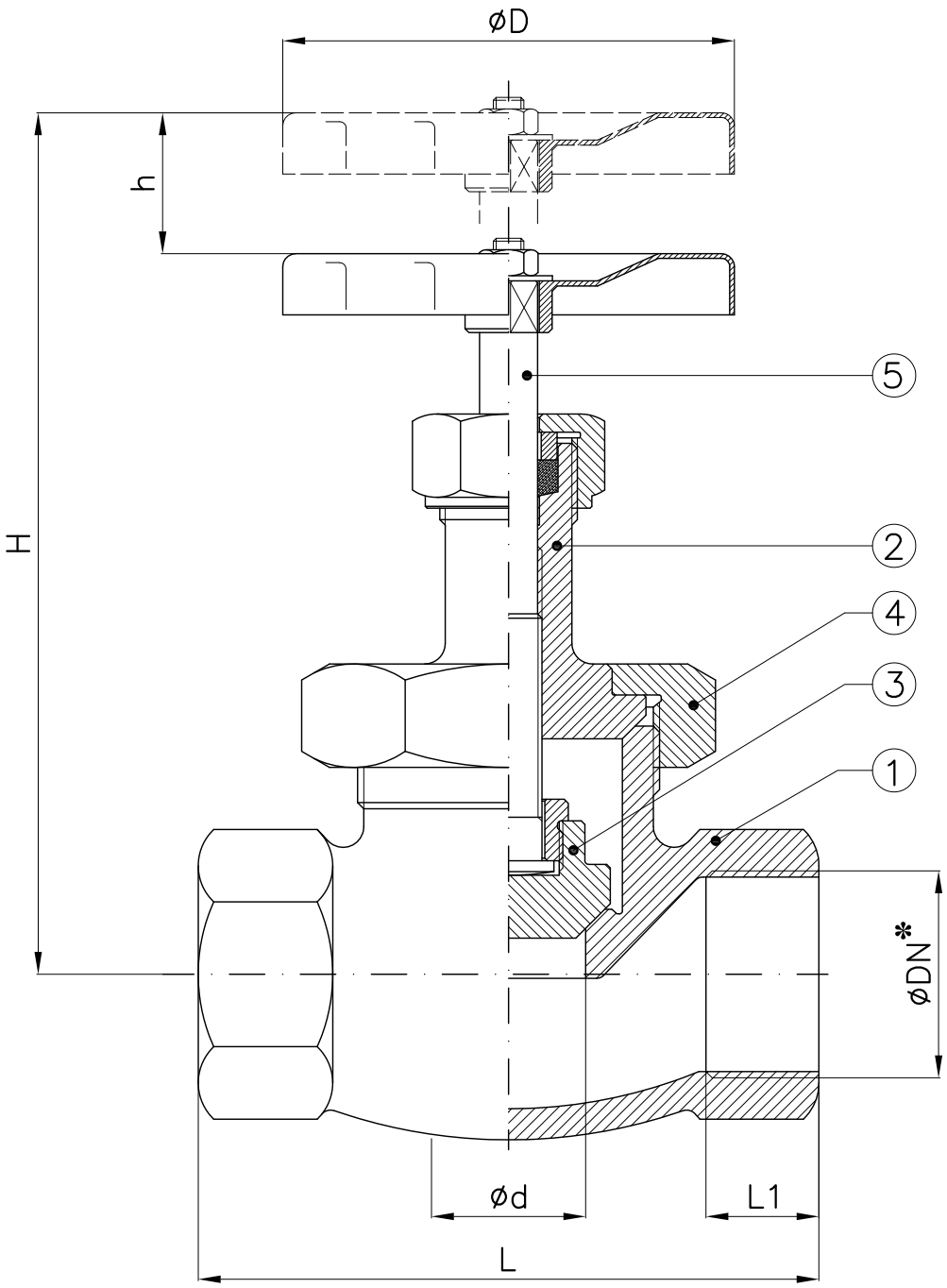

✻: Filettatura GAS–NPT

✻: *BSPP–NPT threaded*

DN	D	d	H	h	L	L1
1/2"	60	12.5	123	10	62	13
3/4"	70	19	133	11	69	13
1"	70	25	150	15	84	16
1"1/4	80	31.5	178	17	100	17
1"1/2	90	38	195	20	110	19
2"	100	43	217	19	128	20

Combinazione materiali standard – Standard materials Combination		
		B/O
ITEM	DENOMINAZIONE DENOMINATION	MATERIALE MATERIAL
01	Body	Bronze CB491K
02	Bonnet	Bronze CB491K
03	Disc	Bronze CB491K
04	Cover	Bronze CB491K
05	Stem	Brass CW617N (OT58)
Nota: Combinazioni materiali non standard a richiesta Note: Non standard materials combinations on request		

Valvole a via diritta - serie pesante PN6 con motore elettrico
Globe valves straight type - heavy class NP6 with electric motor

Tab.122-ME-PSL

Esecuzione comandata
SDSL type

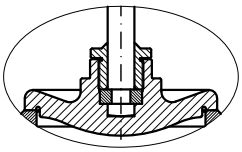

Esecuzione semiautomatica
SDNR type

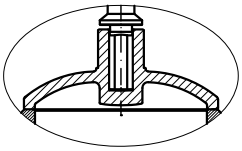

Conform to:
UNI EN1092
DIN 3202

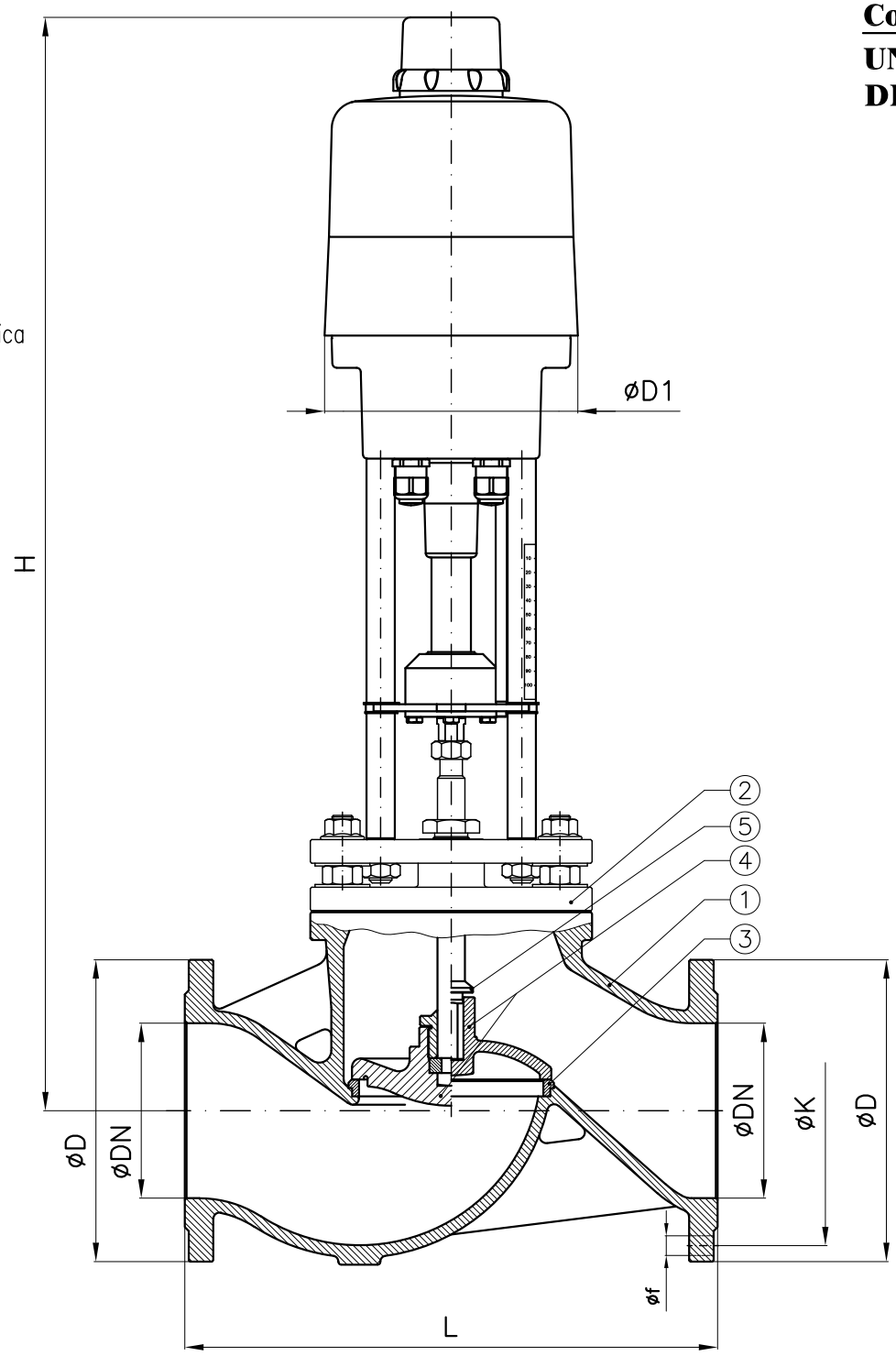

DN	D1	H (~)	L	D	K	f	Holes NO. f	Electric motor
40	180	655	200	130	100	14	4	PSL-210
50	180	665	230	140	110	14	4	PSL-210
65	180	680	290	160	130	14	4	PSL-210
80	180	695	310	190	150	18	4	PSL-210
100	180	785	350	210	170	18	4	PSL-214
125	250	945	400	240	200	18	8	PSL-320
150	250	975	480	265	225	18	8	PSL-320

Combinazione materiali standard – Standard materials Combination

ITEM	DENOMINAZIONE DENOMINATION	A/316 MATERIALE MATERIAL	B/316 MATERIALE MATERIAL	B/B MATERIALE MATERIAL	GS/316 MATERIALE MATERIAL
01	Body	Cast steel GP240-GH UNI EN10213	Bronze UNI EN1982 G-CuSn5Zn5Pb5	Bronze UNI EN1982 G-CuSn5Zn5Pb5	Nodular cast iron EN-GJS-400-15U UNI EN1563
02	Bonnet	Cast steel GP240-GH UNI EN10213	Bronze UNI EN1982 G-CuSn5Zn5Pb5	Bronze UNI EN1982 G-CuSn5Zn5Pb5	Nodular cast iron EN-GJS-400-15U UNI EN1563
03	Body seat	Stainless steel AISI316 UNI EN10088	Bronze UNI EN1982 G-CuSn5Zn5Pb5	Bronze UNI EN1982 G-CuSn5Zn5Pb5	Stainless steel AISI316 UNI EN10088
04	Disc (≤ DN80)	Stainless steel AISI316 UNI EN10088	Stainless steel AISI316 UNI EN10088	Bronze UNI EN1982 G-CuSn5Zn5Pb5	Stainless steel AISI316 UNI EN10088
04	Disc (≥ DN100)	Cast steel GP240-GH UNI EN10213 plus AISI316 facing welding	Stainless steel AISI316 UNI EN10088	Bronze UNI EN1982 G-CuSn5Zn5Pb5	Cast steel GP240-GH UNI EN10213 plus AISI316 facing welding
05	Stem	Stainless steel AISI316 UNI EN10088	Stainless steel AISI316 UNI EN10088	Stainless steel AISI316 UNI EN10088	Stainless steel AISI316 UNI EN10088

Note: Combinazioni materiali non standard a richiesta
Non standard materials combinations on request

Valvole a via diritta - serie pesante PN16 con motore elettrico
Globe valves straight type - heavy class NP16 with electric motor

Tab.126-ME-PSL

Esecuzione comandata
SDSL type

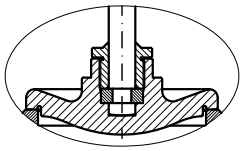

Esecuzione semiautomatica
SDNR type

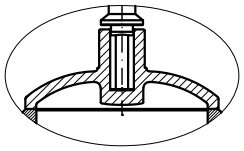

Conform to:
UNI EN1092
DIN 3202

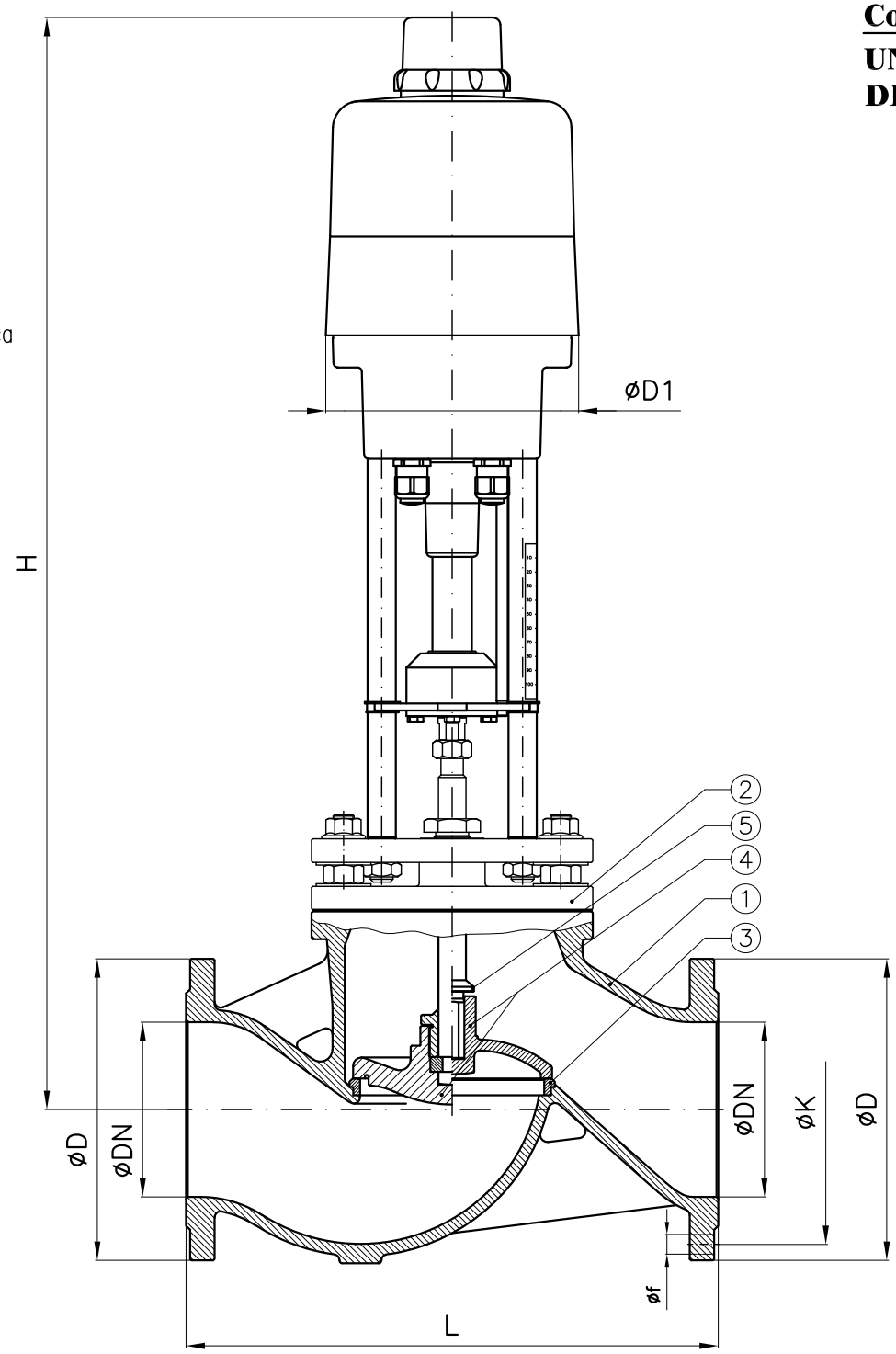

DN	D1	H (~)	L	D	K	f	Holes NO. f	Electric motor
40	180	655	200	150	110	18	4	PSL-210
50	180	665	230	165	125	18	4	PSL-210
65	180	690	290	185	145	18	4	PSL-210
80	180	760	310	200	160	18	8	PSL-214
100	250	930	350	220	180	18	8	PSL-320
125	250	955	400	250	210	18	8	PSL-325
150	250	980	480	285	240	22	8	PSL-330

Combinazione materiali standard – Standard materials Combination

ITEM	DENOMINAZIONE DENOMINATION	A/316 MATERIALE MATERIAL	B/316 MATERIALE MATERIAL	B/B MATERIALE MATERIAL	GS/316 MATERIALE MATERIAL
01	Body	Cast steel GP240-GH UNI EN10213	Bronze UNI EN1982 G-CuSn5Zn5Pb5	Bronze UNI EN1982 G-CuSn5Zn5Pb5	Nodular cast iron EN-GJS-400-15U UNI EN1563
02	Bonnet	Cast steel GP240-GH UNI EN10213	Bronze UNI EN1982 G-CuSn5Zn5Pb5	Bronze UNI EN1982 G-CuSn5Zn5Pb5	Nodular cast iron EN-GJS-400-15U UNI EN1563
03	Body seat	Stainless steel AISI316 UNI EN10088	Bronze UNI EN1982 G-CuSn5Zn5Pb5	Bronze UNI EN1982 G-CuSn5Zn5Pb5	Stainless steel AISI316 UNI EN10088
04	Disc (≤ DN80)	Stainless steel AISI316 UNI EN10088	Stainless steel AISI316 UNI EN10088	Bronze UNI EN1982 G-CuSn5Zn5Pb5	Stainless steel AISI316 UNI EN10088
04	Disc (≥ DN100)	Cast steel GP240-GH UNI EN10213 plus AISI316 facing welding	Stainless steel AISI316 UNI EN10088	Bronze UNI EN1982 G-CuSn5Zn5Pb5	Cast steel GP240-GH UNI EN10213 plus AISI316 facing welding
05	Stem	Stainless steel AISI316 UNI EN10088	Stainless steel AISI316 UNI EN10088	Stainless steel AISI316 UNI EN10088	Stainless steel AISI316 UNI EN10088

Combinazioni materiali non standard a richiesta
Note: Non standard materials combinations on request

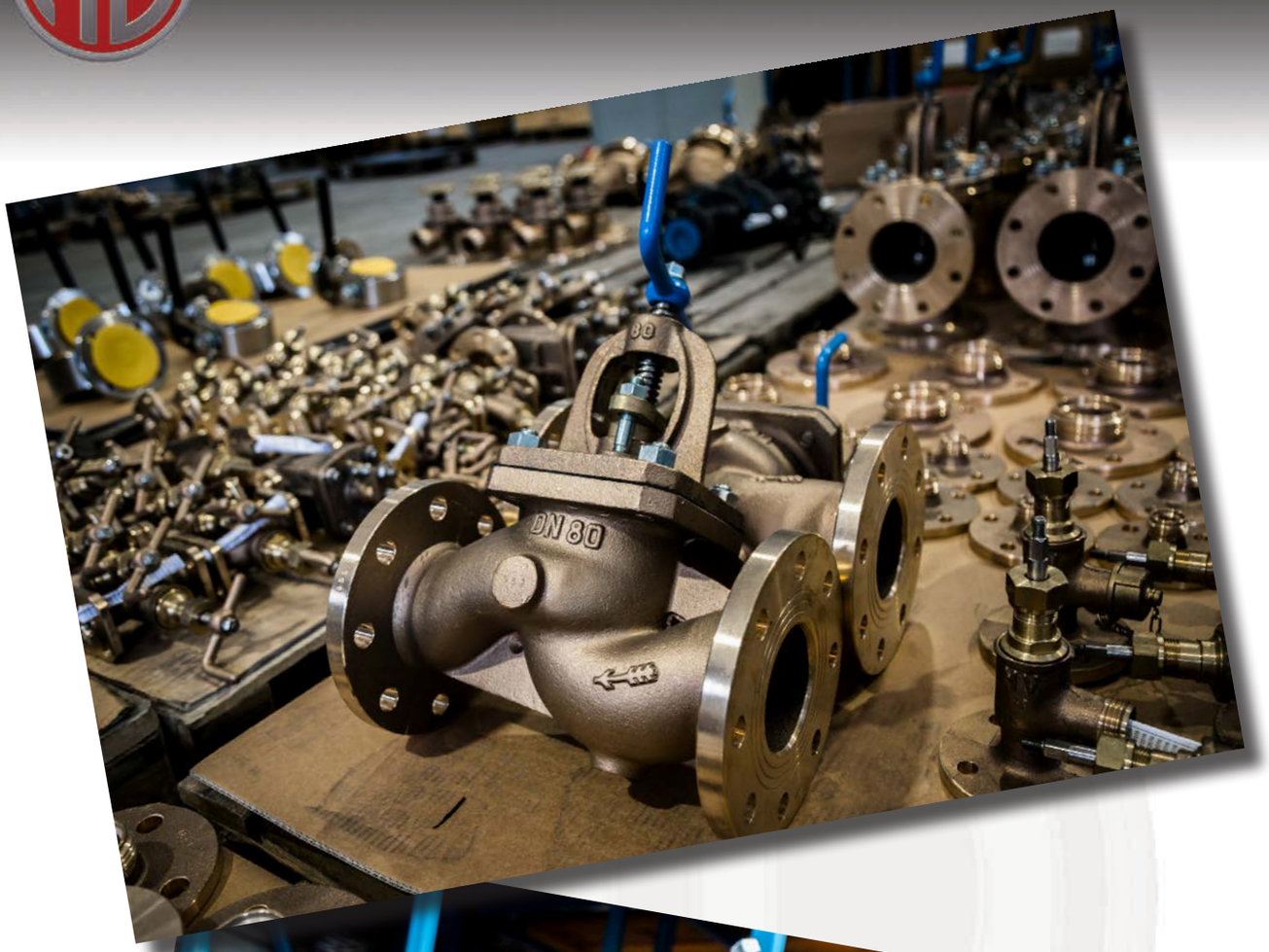

www.medanaevisca.it

Valvole ad angolo retto PN10M.M.I. - serie leggera Marina Militare Italiana

Angle valves NP10M.M.I. - light class Italian Navy

Tab.111A

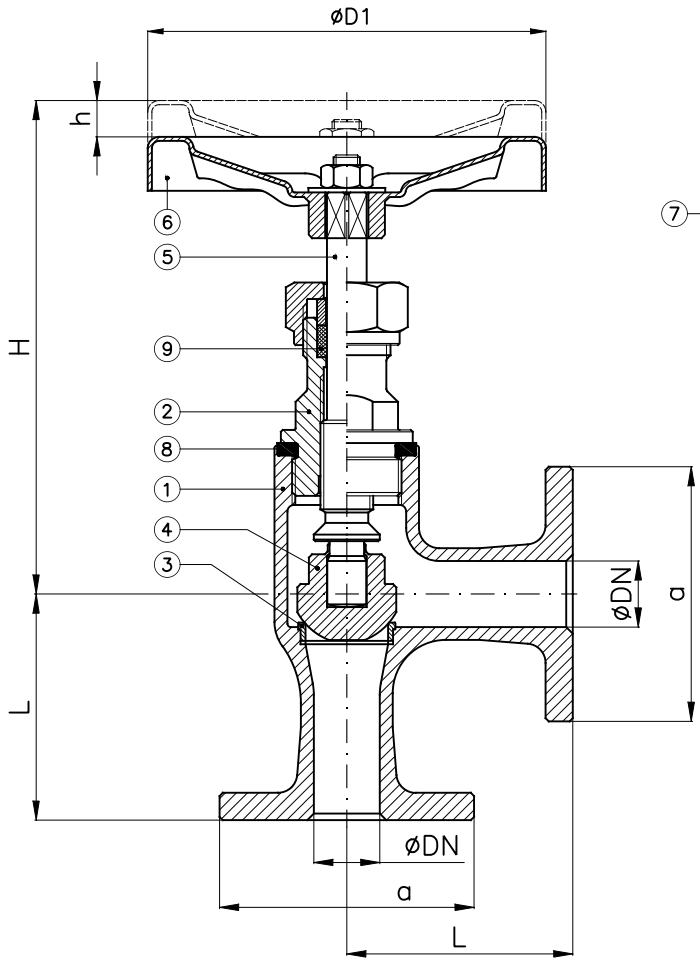

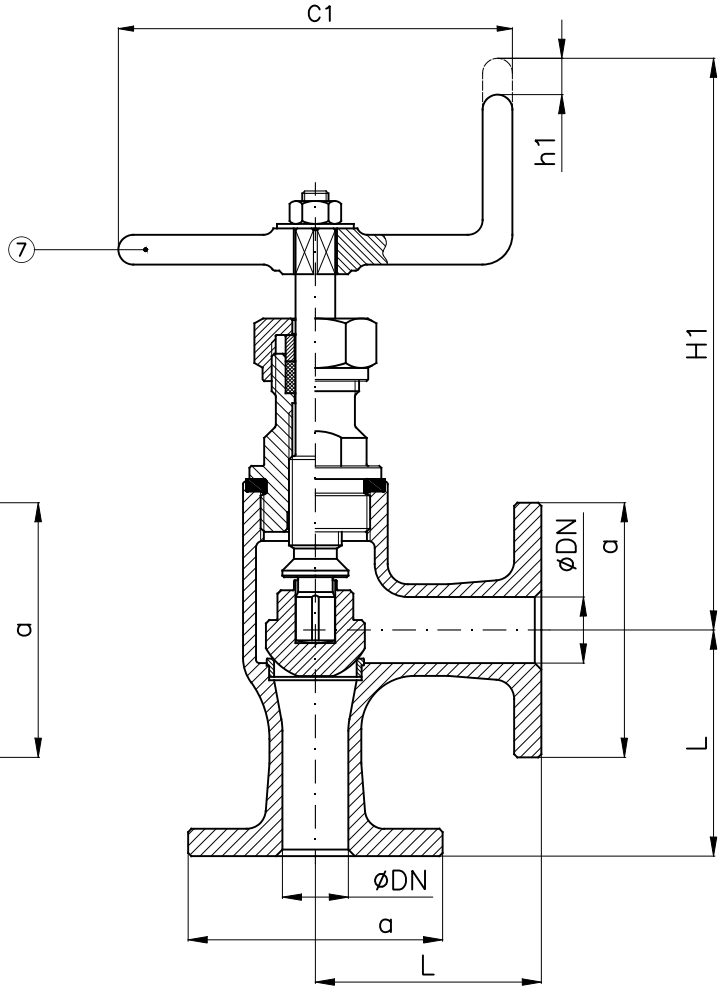

Tab.111AA-SDSL	PN10M.M.I.
comandata (SDSL) with fixed disc (SDSL)	UNI 2450 UNAV 8384-9328

Tab.111AA-SDNR	PN10M.M.I.
semiautomatica (SDNR) with loose disc (SDNR)	UNI 2452 UNAV 8385-9332

DN	a	C1	D1	H SDSL (~)	h SDSL	H1 SDNR (~)	h1 SDNR	L	D	K	f	Holes NO. f	Weight (Kg)
15	72	100	100	150	10	175	10	55	90	65	14	4	2
20	72	100	100	150	10	175	10	55	90	65	14	4	2
25	78	100	100	150	10	175	10	60	95	70	14	4	2.1
32	82	125	125	175	13	205	12	65	100	75	14	4	2.7

Combinazione materiali standard – Standard materials Combination			
		A/316	CF8M/316
ITEM	DENOMINAZIONE DENOMINATION	MATERIALE MATERIAL	MATERIALE MATERIAL
01	Body	Cast steel GP240-GH UNI EN10213	Stainless steel CF8M ASTM A351
02	Bonnet	Carbon steel GE240 UNI EN10293	Stainless steel AISI316 UNI EN10088
03	Body seat	Stainless steel AISI316 UNI EN10088	Stainless steel AISI316 UNI EN10088
04	Disc	Stainless steel AISI316 UNI EN10088	Stainless steel AISI316 UNI EN10088
05	Stem	Stainless steel AISI316 UNI EN10088	Stainless steel AISI316 UNI EN10088
06	Handwheel	Sheet of carbon steel	Sheet of carbon steel
07	Handle	Steel A37 UNI EN10217-1	Steel A37 UNI EN10217-1
08	Gasket	Planiflex KG carbo/C PF81	Planiflex KG carbo/C PF81
09	Packing	Carbograph GR8800	Carbograph GR8800
Nota: Combinazioni materiali non standard a richiesta Note: Non standard materials combinations on request			

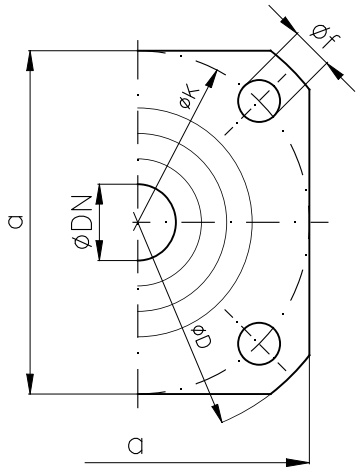

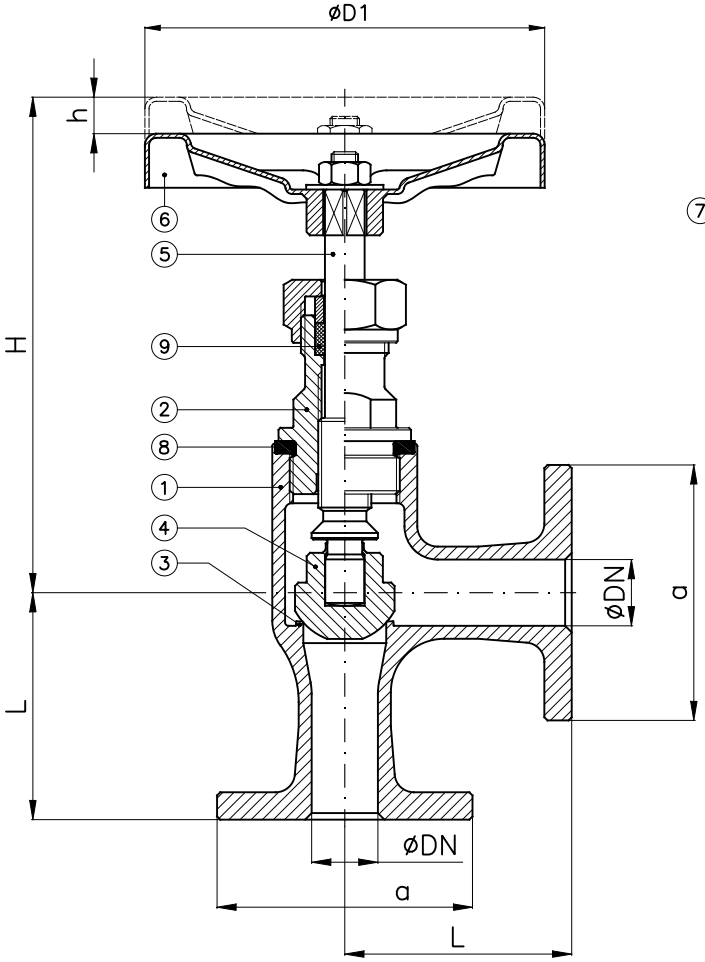

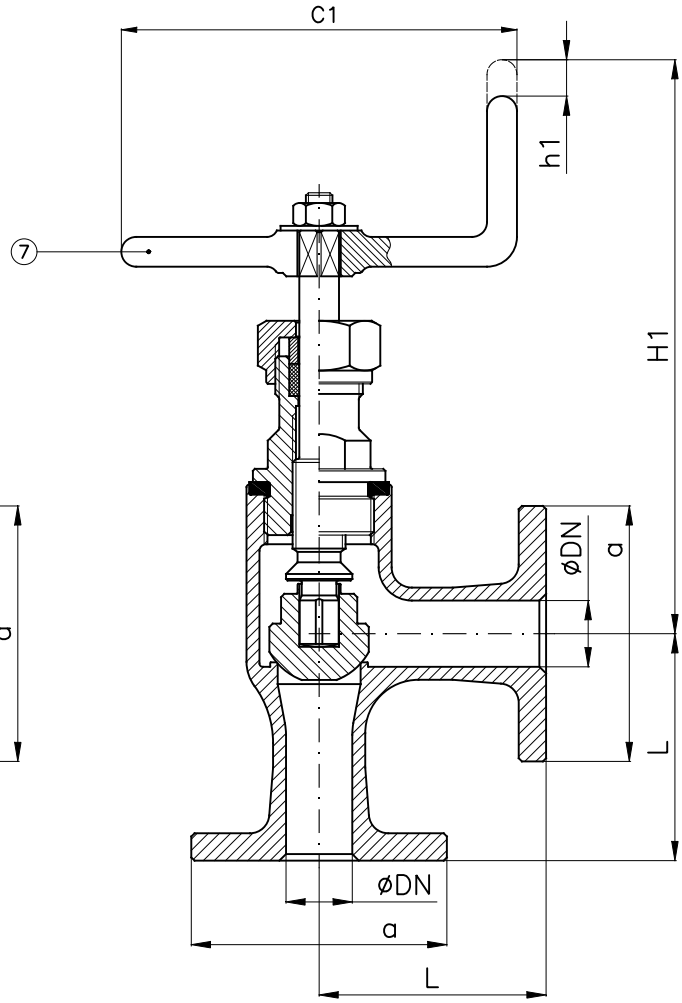

Tab.111.1B PN10M.M.I.	
comandata (SDSL) with fixed disc (SDSL)	UNI 2450 UNAV 9340-9348

Tab.111.2B PN10M.M.I.	
semiautomatica (SDNR) with loose disc (SDNR)	UNI 2452 UNAV 9344-9360

DN	a	C1	D1	H SDSL (~)	h SDSL	H1 SDNR (~)	h1 SDNR	L	D	K	f	Holes NO. f	Weight (Kg)
15	72	100	100	150	10	175	10	55	90	65	14	4	2.1
20	72	100	100	150	10	175	10	55	90	65	14	4	2.1
25	78	100	100	150	10	175	10	60	95	70	14	4	2.3
32	82	125	125	175	13	205	12	65	100	75	14	4	3.3

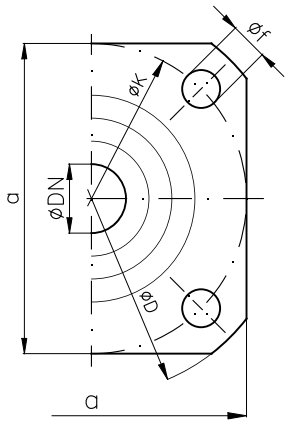

Combinazione materiali standard – Standard materials Combination					
		B/316	B/B	N/316	N/M
ITEM	DENOMINAZIONE DENOMINATION	MATERIALE MATERIAL	MATERIALE MATERIAL	MATERIALE MATERIAL	MATERIALE MATERIAL
01	Body	Bronze UNI EN1982 G-CuSn5Zn5Pb5	Bronze UNI EN1982 G-CuSn5Zn5Pb5	Bronze UNI EN1982 G-CuSn10Zn2Ni2	Bronze UNI EN1982 G-CuSn10Zn2Ni2
02	Bonnet	Bronze UNI EN1982 G-CuSn5Zn5Pb5	Bronze UNI EN1982 G-CuSn5Zn5Pb5	Bronze UNI EN1982 G-CuSn10Zn2Ni2	Bronze UNI EN1982 G-CuSn10Zn2Ni2
03	Integral body seat	Bronze UNI EN1982 G-CuSn5Zn5Pb5	Bronze UNI EN1982 G-CuSn5Zn5Pb5	Bronze UNI EN1982 G-CuSn10Zn2Ni2	Bronze UNI EN1982 G-CuSn10Zn2Ni2
04	Disc	Stainless steel AISI316 UNI EN10088	Bronze UNI EN1982 G-CuSn5Zn5Pb5	Stainless steel AISI316 UNI EN10088	Monel K500 BS 3076 NA18 (2.4375)
05	Stem	Stainless steel AISI316 UNI EN10088	Brass CW617N (OT58)	Stainless steel AISI316 UNI EN10088	Monel K500 BS 3076 NA18 (2.4375)
06	Handwheel	Sheet of carbon steel	Sheet of carbon steel	Sheet of carbon steel	Sheet of carbon steel
07	Handle	Steel A37 UNI EN10217-1	Steel A37 UNI EN10217-1	Steel A37 UNI EN10217-1	Steel A37 UNI EN10217-1
08	Gasket	Planiflex KG carbo/C PF81	Planiflex KG carbo/C PF81	Planiflex KG carbo/C PF81	Planiflex KG carbo/C PF81
09	Packing	Carbograph GR8800	Carbograph GR8800	Carbograph GR8800	Carbograph GR8800

Nota: Combinazioni materiali non standard a richiesta
Note: Non standard materials combinations on request

Valvole ad angolo retto PN10M.M.I. - serie leggera Marina Militare Italiana

Angle valves NP10M.M.I. - light class Italian Navy

Tab.113A

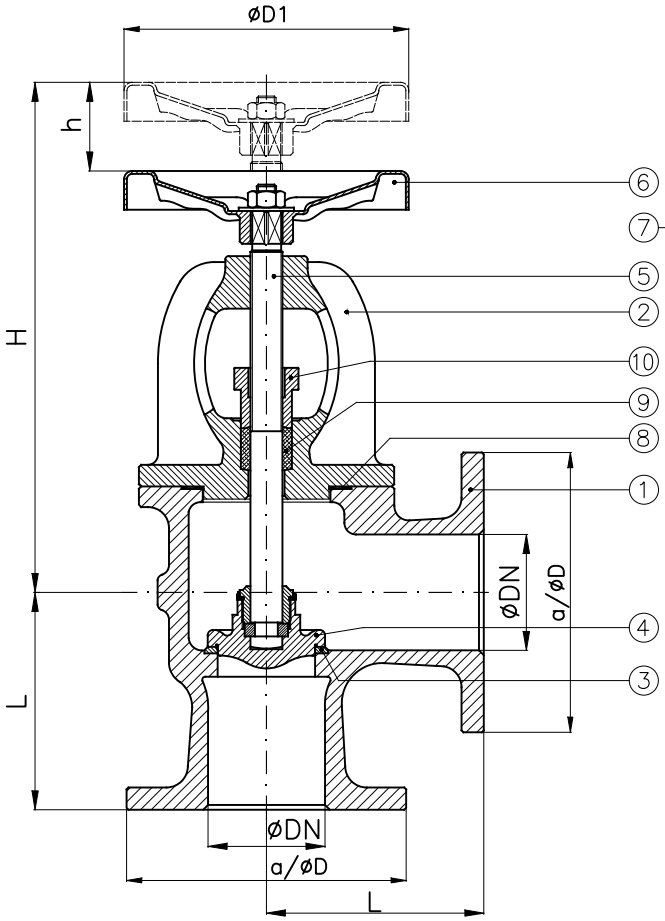

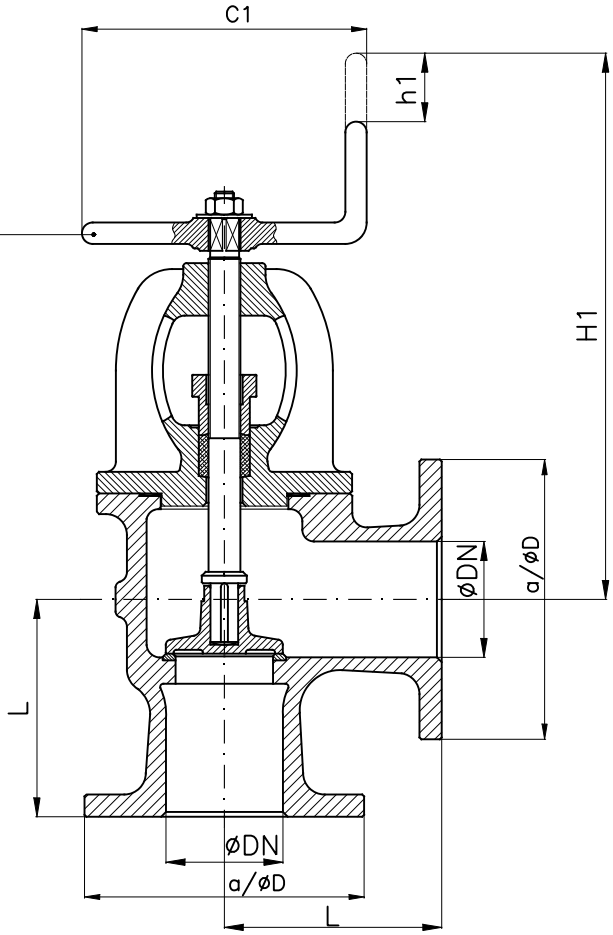

Tab.113.1A PN10M.M.I.	
comandata (SDSL) with fixed disc (SDSL)	UNAV 9328–9329

Tab.113.2A PN10M.M.I.	
semiautomatica (SDNR) with loose disc (SDNR)	UNAV 9332–9333

Flangia quadra
Square flange

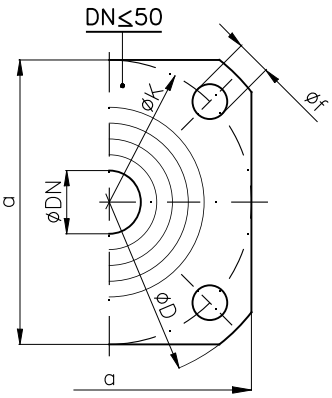

Flangia tonda
Round flange

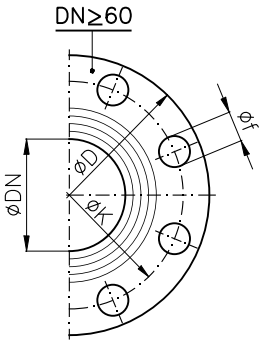

DN	a	C1	D1	H SDSL (~)	h SDSL	H1 SDNR (~)	h1 SDNR	L	D	K	f	Holes NO. f	Weight (Kg)
40	85	125	125	220	20	260	16	75	110	85	14	4	6.3
50	95	125	125	230	24	260	17	85	120	95	14	4	7
60	–	175	175	255	28	280	16	100	135	110	14	6	10
65/70	–	175	175	275	32	305	18	105	140	115	14	6	11.2
80	–	175	175	285	35	310	20	110	155	130	14	8	13.9
90	–	200	200	305	38	330	24	120	170	145	14	8	16.5
100	–	200	200	320	45	350	28	130	175	150	14	8	24
125	–	225	225	360	54	385	32	145	200	175	14	12	29
150	–	225	300	385	62	410	38	160	230	205	14	12	38
175	–	250	400	445	74	465	45	190	270	240	18	12	60
200	–	250	400	465	82	480	50	220	295	265	18	12	65

Combinazione materiali standard – Standard materials Combination			
		A/316	CF8M/316
ITEM	DENOMINAZIONE DENOMINATION	MATERIALE MATERIAL	MATERIALE MATERIAL
01	Body	Cast steel GP240–GH UNI EN10213	Stainless steel CF8M ASTM A351
02	Bonnet	Cast steel GP240–GH UNI EN10213	Stainless steel CF8M ASTM A351
03	Body seat	Stainless steel AISI316 UNI EN10088	Stainless steel AISI316 UNI EN10088
04	Disc (≤ DN80)	Stainless steel AISI316 UNI EN10088	Stainless steel AISI316 UNI EN10088
04	Disc (≥ DN100)	Cast steel GP240–GH UNI EN10213 plus AISI316 facing welding	Stainless steel CF8M ASTM A351
05	Stem	Stainless steel AISI316 UNI EN10088	Stainless steel AISI316 UNI EN10088
06	Handwheel	Sheet of carbon steel	Sheet of carbon steel
07	Handle	Steel A37 UNI EN10217–1	Steel A37 UNI EN10217–1
08	Gasket	Planiflex KG carbo/C PF81	Planiflex KG carbo/C PF81
09	Packing	Carbograph GR8800	Carbograph GR8800
10	Gland bushing	Steel Fe360B (S235JRC) UNI EN10025	Stainless steel AISI316 UNI EN10088

Nota: Combinazioni materiali non standard a richiesta
Note: Non standard materials combinations on request

Valvole ad angolo retto PN10M.M.I. - serie leggera Marina Militare Italiana

Angle valves NP10M.M.I. - light class Italian Navy

Tab.113B

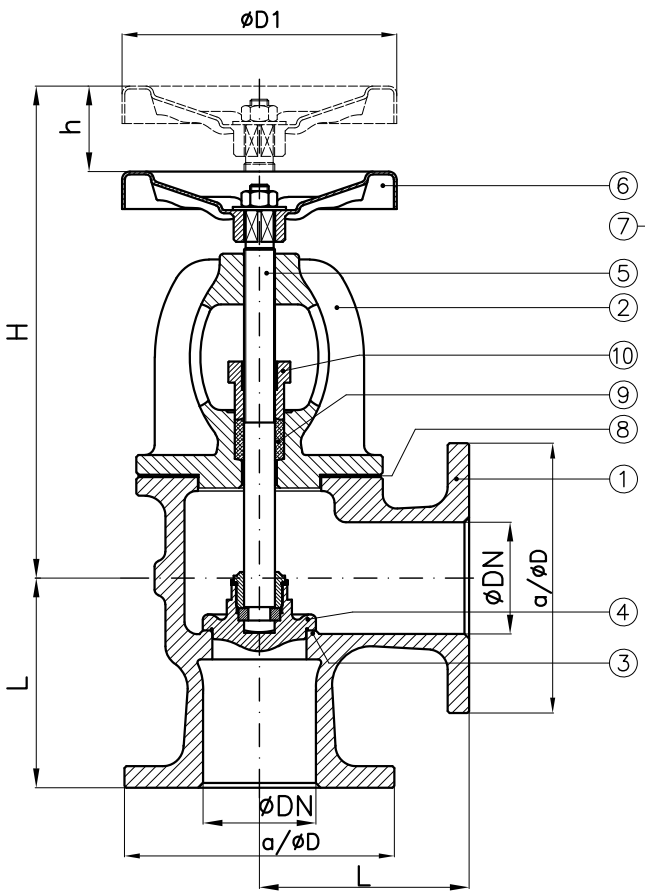

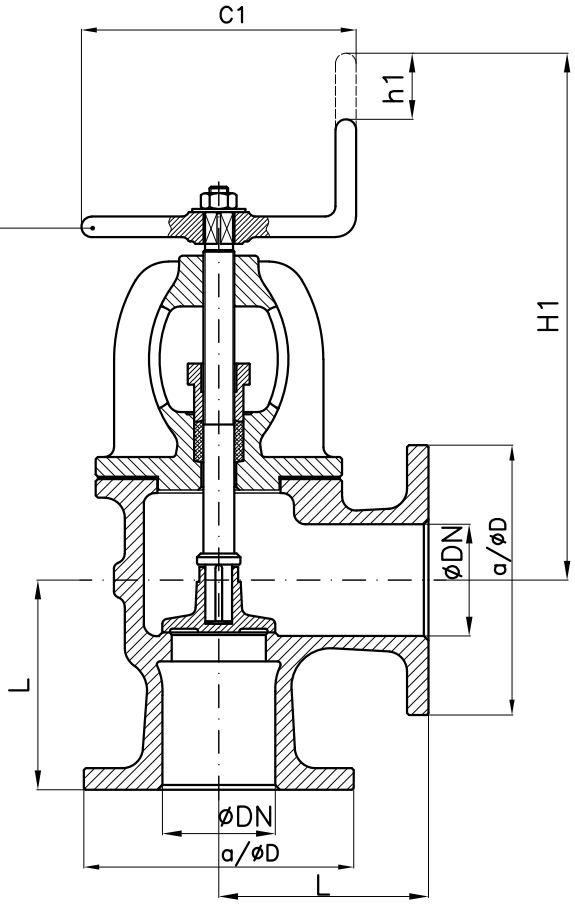

Tab.113.1B PN10M.M.I.		
comandata (SDSL) with fixed disc (SDSL)	UNI 2451	UNAV 8321–9340 UNAV 9341–9348 UNAV 9349

Tab.113.2B PN10M.M.I.		
semiautomatica (SDNR) with loose disc (SDNR)	UNI 2453	UNAV 8343–9344 UNAV 9345–9360 UNAV 9361

DN	a	C1	D1	H SDSL (~)	h SDSL	H1 SDNR (~)	h1 SDNR	L	D	K	f	Holes NO. f	Weight (Kg)
40	85	125	125	220	20	260	16	75	110	85	14	4	6.8
50	95	125	125	230	24	260	17	85	120	95	14	4	8
60	–	175	175	255	28	280	16	100	135	110	14	6	10
65/70	–	175	175	275	32	305	18	105	140	115	14	6	14.2
80	–	175	175	285	35	310	20	110	155	130	14	8	13.9
90	–	200	200	305	38	330	24	120	170	145	14	8	18.5
100	–	200	200	320	45	350	28	130	175	150	14	8	21.5
125	–	225	225	360	54	385	32	145	200	175	14	12	28
150	–	225	300	385	62	410	38	160	230	205	14	12	40
175	–	250	400	445	74	465	45	190	270	240	18	12	60
200	–	250	400	465	82	480	50	220	295	265	18	12	65

Flangia quadra

Square flange

DN≤50

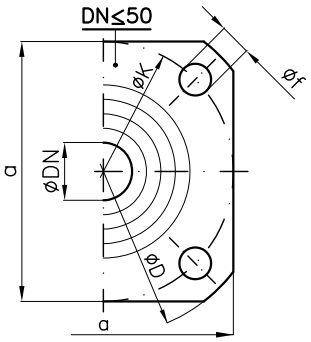

Flangia tonda

Round flange

DN≥60

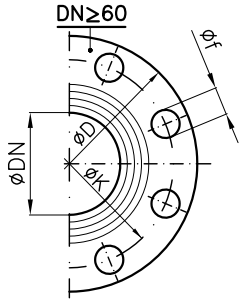

Combinazione materiali standard – Standard materials Combination					
		B/316	B/B	N/316	N/M
ITEM	DENOMINAZIONE DENOMINATION	MATERIALE MATERIAL	MATERIALE MATERIAL	MATERIALE MATERIAL	MATERIALE MATERIAL
01	Body	Bronze UNI EN1982 G–CuSn5Zn5Pb5	Bronze UNI EN1982 G–CuSn5Zn5Pb5	Bronze UNI EN1982 G–CuSn10Zn2Ni2	Bronze UNI EN1982 G–CuSn10Zn2Ni2
02	Bonnet	Bronze UNI EN1982 G–CuSn5Zn5Pb5	Bronze UNI EN1982 G–CuSn5Zn5Pb5	Bronze UNI EN1982 G–CuSn10Zn2Ni2	Bronze UNI EN1982 G–CuSn10Zn2Ni2
03	Integral body seat	Bronze UNI EN1982 G–CuSn5Zn5Pb5	Bronze UNI EN1982 G–CuSn5Zn5Pb5	Bronze UNI EN1982 G–CuSn10Zn2Ni2	Bronze UNI EN1982 G–CuSn10Zn2Ni2
04	Disc	Stainless steel AISI316 UNI EN10088	Bronze UNI EN1982 G–CuSn5Zn5Pb5	Stainless steel AISI316 UNI EN10088	Monel K500 BS 3076 NA18 (2.4375)
05	Stem	Stainless steel AISI316 UNI EN10088	Brass CW617N (OT58)	Stainless steel AISI316 UNI EN10088	Monel K500 BS 3076 NA18 (2.4375)
06	Handwheel	Sheet of carbon steel	Sheet of carbon steel	Sheet of carbon steel	Sheet of carbon steel
07	Handle	Steel A37 UNI EN10217–1	Steel A37 UNI EN10217–1	Steel A37 UNI EN10217–1	Steel A37 UNI EN10217–1
08	Gasket	EPDM	EPDM	EPDM	EPDM
09	Packing	Carbograph GR8800	Carbograph GR8800	Carbograph GR8800	Carbograph GR8800
10	Gland bushing	Brass CW509L (OT60)	Brass CW509L (OT60)	Brass CW509L (OT60)	Brass CW509L (OT60)

Nota: Combinazioni materiali non standard a richiesta
Note: Non standard materials combinations on request

Valvole ad angolo retto - serie pesante PN6
Angle valves - heavy class NP6

Tab.121A

Conform to:
UNI EN1092

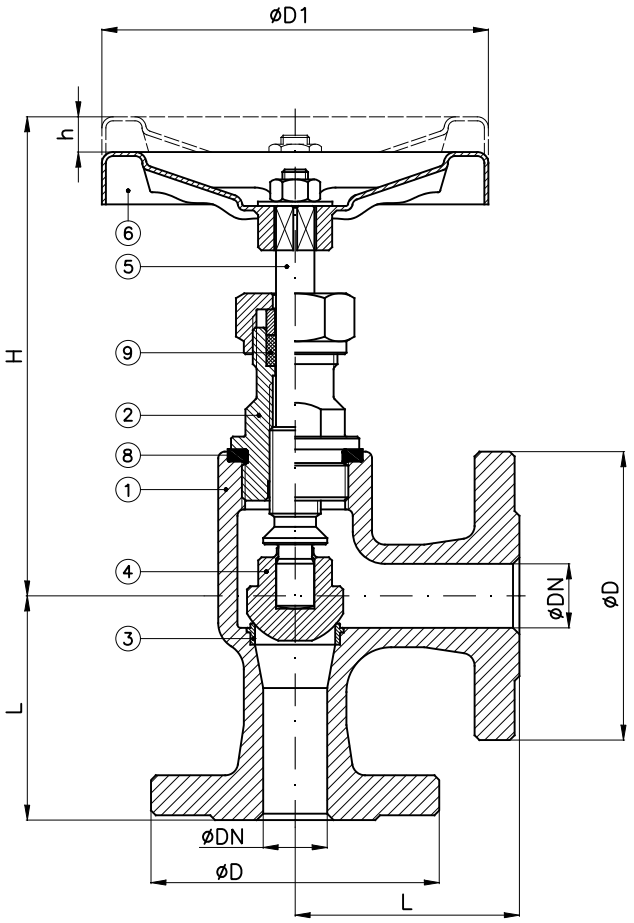

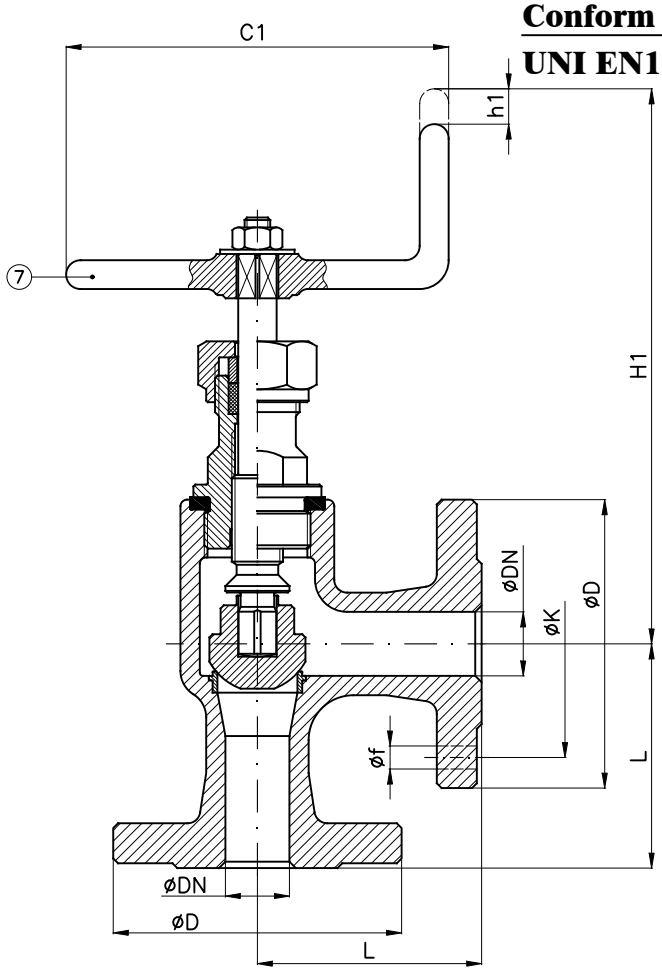

Tab.121.1A PN6	
comandata (SDSL) with fixed disc (SDSL)	UNAV 9832

Tab.121.2A PN6	
semiautomatica (SDNR) with loose disc (SDNR)	UNAV 9835

DN	C1	D1	H SDSL (~)	h SDSL	H1 SDNR (~)	h1 SDNR	L	D	K	f	Holes NO. f	Weight (Kg)
15	100	100	160	10	190	10	70	80	55	11	4	1.7
20	100	100	160	10	190	10	70	90	65	11	4	2
25	100	100	155	10	185	10	75	100	75	11	4	3
32	125	125	180	13	205	13	80	120	90	14	4	4

Combinazione materiali standard – Standard materials Combination				
		A/316	A/B	CF8M/316
ITEM	DENOMINAZIONE DENOMINATION	MATERIALE MATERIAL	MATERIALE MATERIAL	MATERIALE MATERIAL
01	Body	Cast steel GP240-GH UNI EN10213	Cast steel GP240-GH UNI EN10213	Stainless steel CF8M ASTM A351
02	Bonnet	Carbon steel GE240 UNI EN10293	Carbon steel GE240 UNI EN10293	Stainless steel AISI316 UNI EN10088
03	Body seat	Stainless steel AISI316 UNI EN10088	Stainless steel AISI316 UNI EN10088	Stainless steel AISI316 UNI EN10088
04	Disc	Stainless steel AISI316 UNI EN10088	Bronze UNI EN1982 G-CuSn5Zn5Pb5	Stainless steel AISI316 UNI EN10088
05	Stem	Stainless steel AISI316 UNI EN10088	Brass CW617N (OT58)	Stainless steel AISI316 UNI EN10088
06	Handwheel	Sheet of carbon steel	Sheet of carbon steel	Sheet of carbon steel
07	Handle	Steel A37 UNI EN10217-1	Steel A37 UNI EN10217-1	Steel A37 UNI EN10217-1
08	Gasket	Planiflex KG carbo/C PF81	Planiflex KG carbo/C PF81	Planiflex KG carbo/C PF81
09	Packing	Carbograph GR8800	Carbograph GR8800	Carbograph GR8800

Nota: Combinazioni materiali non standard a richiesta
Note: Non standard materials combinations on request

Valvole ad angolo retto - serie pesante PN6
Angle valves - heavy class NP6

Tab.121B

Conform to:
UNI EN1092

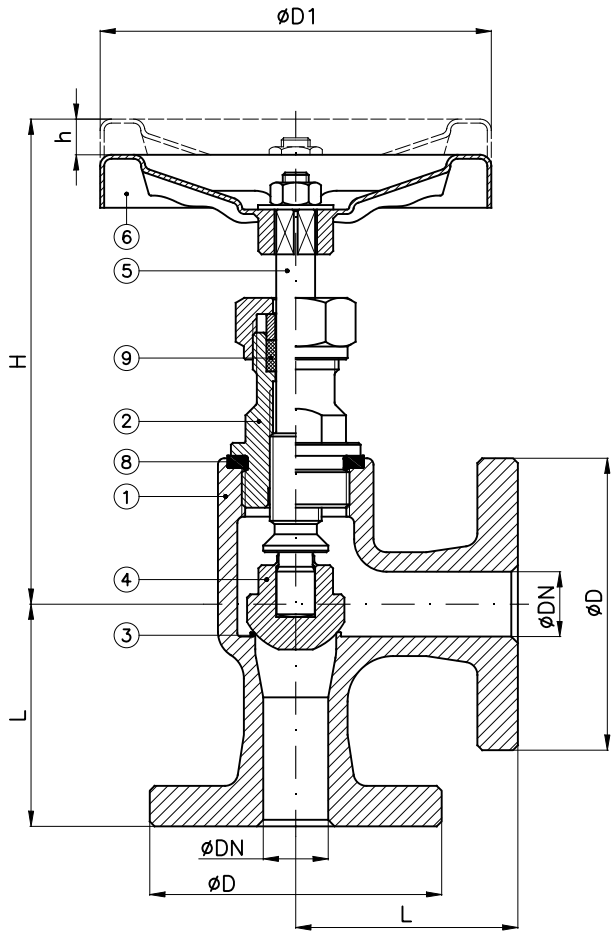

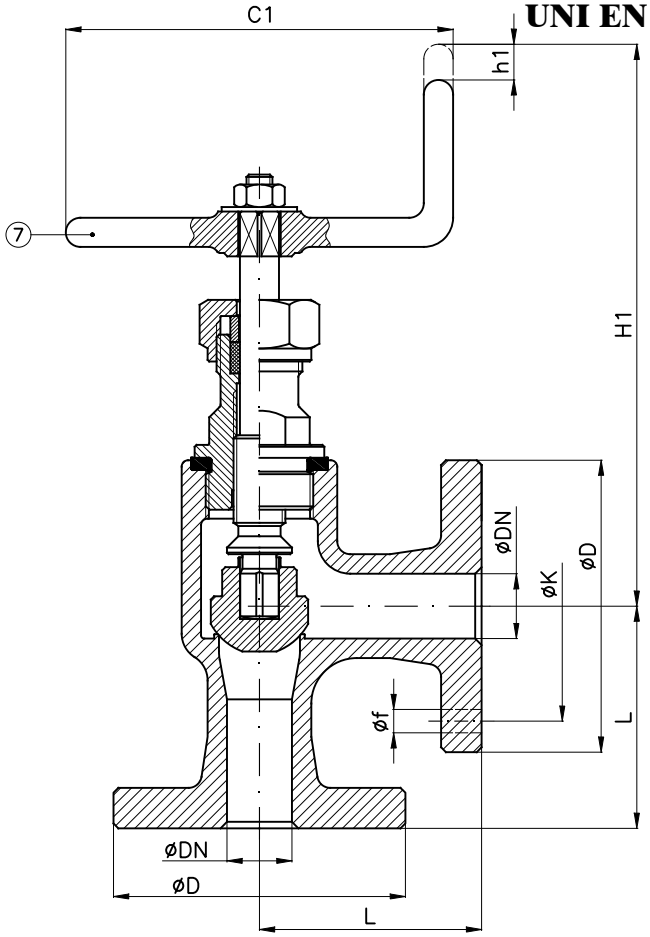

Tab.121.1B PN6	
comandata (SDSL) with fixed disc (SDSL)	UNAV 9807

Tab.121.2B PN6	
semiautomatica (SDNR) with loose disc (SDNR)	UNAV 9810

DN	C1	D1	H SDSL (~)	h SDSL	H1 SDNR (~)	h1 SDNR	L	D	K	f	Holes NO. f	Weight (Kg)
15	100	100	155	10	185	10	70	80	55	11	4	3
20	100	100	155	10	185	10	70	90	65	11	4	3
25	100	100	155	10	185	10	75	100	75	11	4	3
32	125	125	175	13	205	13	80	120	90	14	4	5

Combinazione materiali standard – Standard materials Combination

		B/316	B/B
ITEM	DENOMINAZIONE DENOMINATION	MATERIALE MATERIAL	MATERIALE MATERIAL
01	Body	Bronze UNI EN1982 G-CuSn5Zn5Pb5	Bronze UNI EN1982 G-CuSn5Zn5Pb5
02	Bonnet	Bronze UNI EN1982 G-CuSn5Zn5Pb5	Bronze UNI EN1982 G-CuSn5Zn5Pb5
03	Integral body seat	Bronze UNI EN1982 G-CuSn5Zn5Pb5	Bronze UNI EN1982 G-CuSn5Zn5Pb5
04	Disc	Stainless steel AISI316 UNI EN10088	Bronze UNI EN1982 G-CuSn5Zn5Pb5
05	Stem	Stainless steel AISI316 UNI EN10088	Brass CW617N (OT58)
06	Handwheel	Sheet of carbon steel	Sheet of carbon steel
07	Handle	Steel A37 UNI EN10217-1	Steel A37 UNI EN10217-1
08	Gasket	Planiflex KG carbo/C PF81	Planiflex KG carbo/C PF81
09	Packing	Carbograph GR8800	Carbograph GR8800

Nota: Combinazioni materiali non standard a richiesta
Note: Non standard materials combinations on request

Valvole ad angolo retto - serie pesante PN6
Angle valves - heavy class NP6

Tab.121G

Conform to:
UNI EN1092

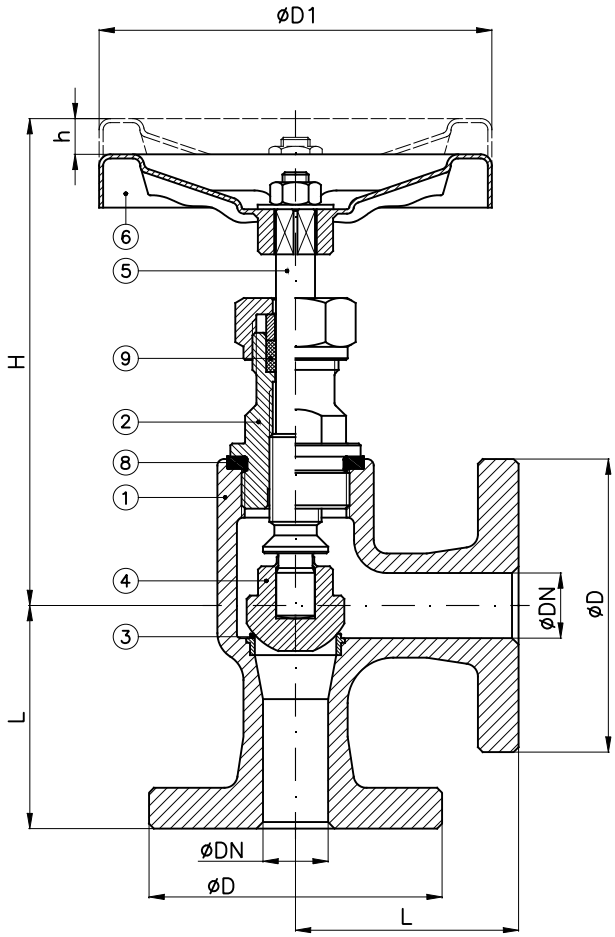

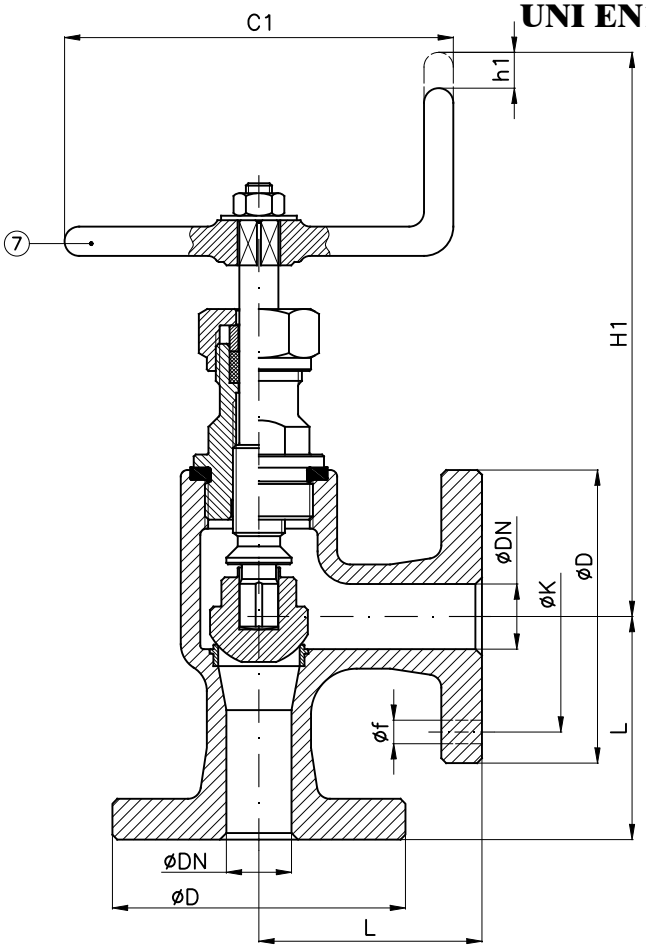

Tab.121.1G PN6	
comandata (SDSL) with fixed disc (SDSL)	UNI 3417 UNAV 8414

Tab.121.2G PN6	
semiautomatica (SDNR) with loose disc (SDNR)	UNI 3421 UNAV 8422

DN	C1	D1	H SDSL (~)	h SDSL	H1 SDNR (~)	h1 SDNR	L	D	K	f	Holes NO. f	Weight (Kg)
15	100	100	150	10	180	10	70	80	55	11	4	2.5
20	100	100	150	10	180	10	70	90	65	11	4	3
25	100	100	150	10	180	10	75	100	75	11	4	3.5
32	125	125	170	13	200	13	80	120	90	14	4	4.5

Combinazione materiali standard – Standard materials Combination			
		G/316	G/B
ITEM	DENOMINAZIONE DENOMINATION	MATERIALE MATERIAL	MATERIALE MATERIAL
01	Body	Cast iron UNI EN1561 EN-GJL-250	Cast iron UNI EN1561 EN-GJL-250
02	Bonnet	Carbon steel GE240 UNI EN10293	Carbon steel GE240 UNI EN10293
03	Body seat	Stainless steel AISI316 UNI EN10088	Stainless steel AISI316 UNI EN10088
04	Disc	Stainless steel AISI316 UNI EN10088	Bronze UNI EN1982 G-CuSn5Zn5Pb5
05	Stem	Stainless steel AISI316 UNI EN10088	Brass CW617N (OT58)
06	Handwheel	Sheet of carbon steel	Sheet of carbon steel
07	Handle	Steel A37 UNI EN10217-1	Steel A37 UNI EN10217-1
08	Gasket	Planiflex KG carbo/C PF81	Planiflex KG carbo/C PF81
09	Packing	Carbograph GR8800	Carbograph GR8800
Nota: Combinazioni materiali non standard a richiesta Note: Non standard materials combinations on request			

Valvole ad angolo retto - serie pesante PN6
Angle valves - heavy class NP6

Tab.121GS

Conform to:
UNI EN1092

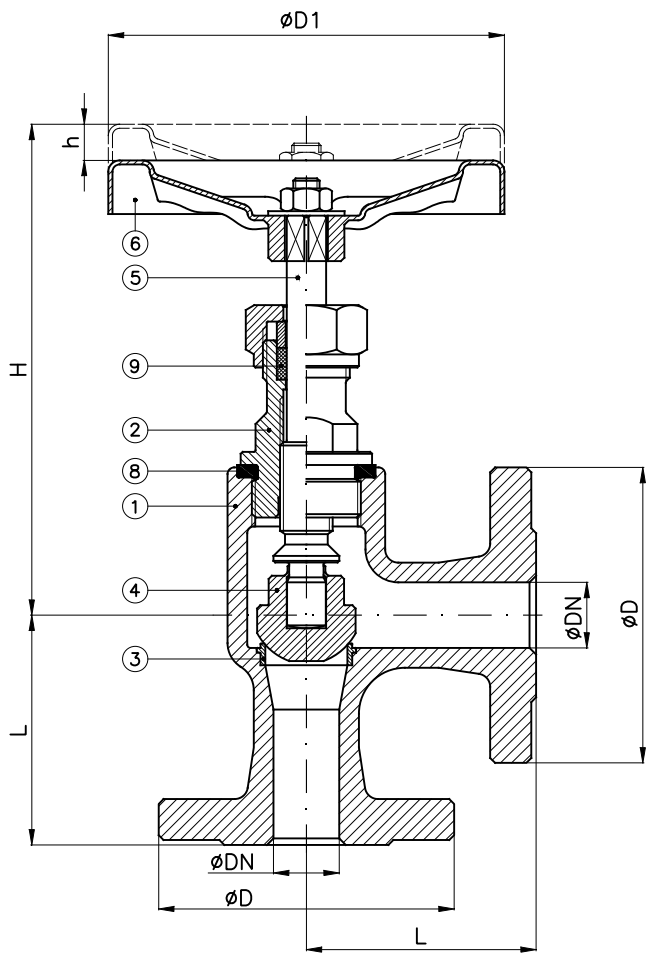

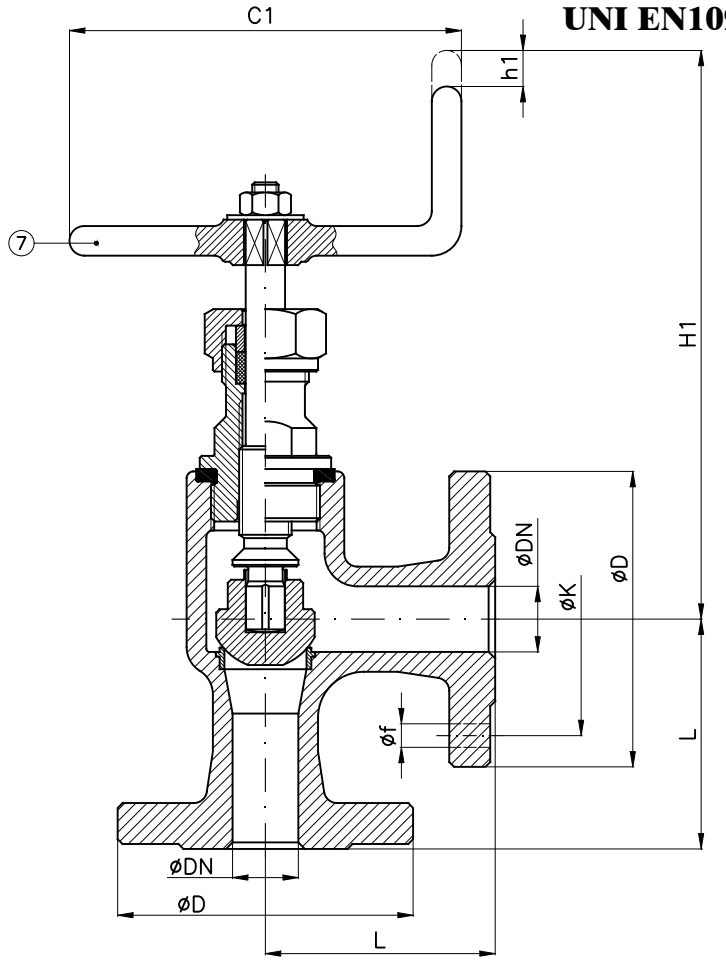

Tab.121.1GS PN6	
comandata (SDSL) with fixed disc (SDSL)	UNI 3417 UNAV 8414

Tab.121.2GS PN6	
semiautomatica (SDNR) with loose disc (SDNR)	UNI 3421 UNAV 8422

DN	C1	D1	H SDSL (~)	h SDSL	H1 SDNR (~)	h1 SDNR	L	D	K	f	Holes NO. f	Weight (Kg)
15	100	100	150	10	180	10	70	80	55	11	4	2.5
20	100	100	150	10	180	10	70	90	65	11	4	3
25	100	100	150	10	180	10	75	100	75	11	4	3.5
32	125	125	170	13	200	13	80	120	90	14	4	4.5

Combinazione materiali standard – Standard materials Combination			
		GS/316	GS/B
ITEM	DENOMINAZIONE DENOMINATION	MATERIALE MATERIAL	MATERIALE MATERIAL
01	Body	Nodular cast iron EN-GJS-400-15U UNI EN1563	Nodular cast iron EN-GJS-400-15U UNI EN1563
02	Bonnet	Carbon steel GE240 UNI EN10293	Carbon steel GE240 UNI EN10293
03	Body seat	Stainless steel AISI316 UNI EN10088	Stainless steel AISI316 UNI EN10088
04	Disc	Stainless steel AISI316 UNI EN10088	Bronze UNI EN1982 G-CuSn5Zn5Pb5
05	Stem	Stainless steel AISI316 UNI EN10088	Brass CW617N (OT58)
06	Handwheel	Sheet of carbon steel	Sheet of carbon steel
07	Handle	Steel A37 UNI EN10217-1	Steel A37 UNI EN10217-1
08	Gasket	Planiflex KG carbo/C PF81	Planiflex KG carbo/C PF81
09	Packing	Carbograph GR8800	Carbograph GR8800
Nota: Combinazioni materiali non standard a richiesta Note: Non standard materials combinations on request			

Valvole ad angolo retto - serie pesante PN6
Angle valves - heavy class NP6

Tab.123A

Conform to:
UNI EN1092

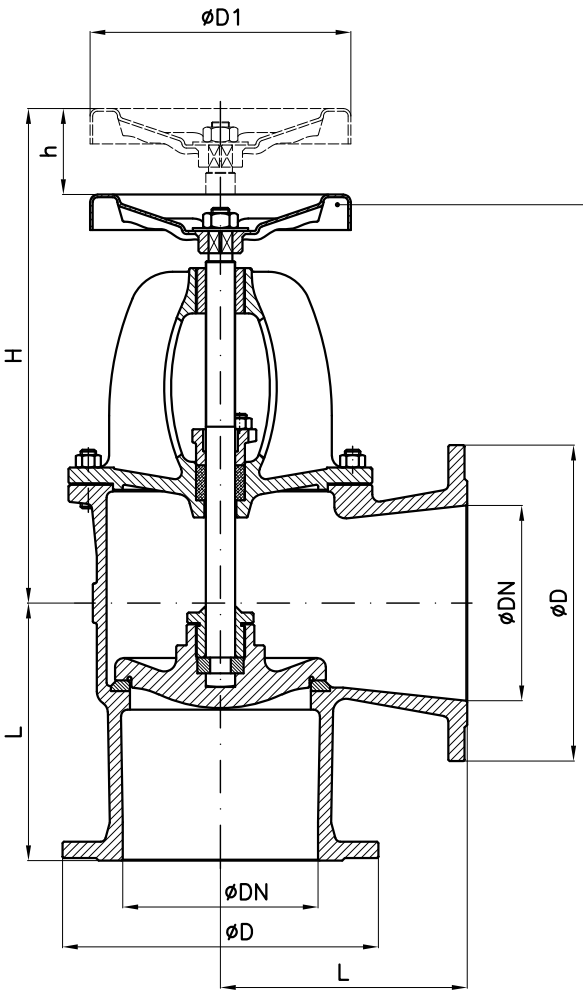

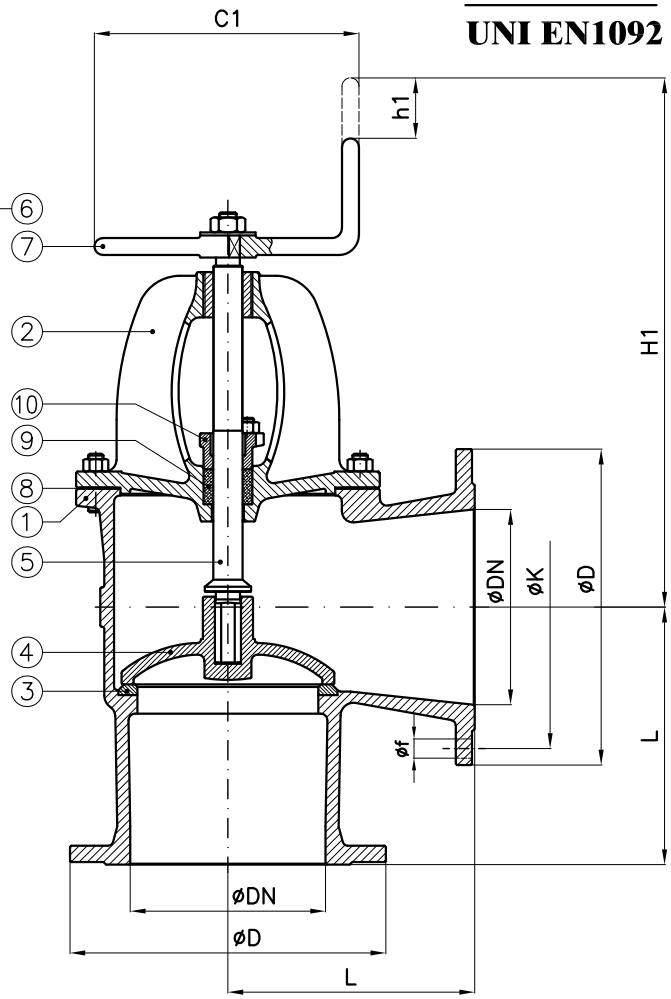

Tab.123.1A PN6	
comandata (SDSL) with fixed disc (SDSL)	UNAV 9833

Tab.123.2A PN6	
semiautomatica (SDNR) with loose disc (SDNR)	UNAV 9836

DN	C1	D1	H SDSL (~)	h SDSL	H1 SDNR (~)	h1 SDNR	L	D	K	f	Holes NO. f	Weight (Kg)
40	125	125	240	20	265	12	95	130	100	14	4	10
50	125	125	250	24	270	14	100	140	110	14	4	11
65	175	175	305	32	325	18	120	160	130	14	4	16.5
80	175	175	320	35	340	20	130	190	150	18	4	21
100	200	200	360	45	370	28	150	210	170	18	4	33
125	225	225	385	54	390	32	175	240	200	18	8	43.5
150	225	300	415	62	425	38	200	265	225	18	8	56
175	250	400	415	74		45	230	295	255	18	8	81
200	250	400	515	82	515	50	250	320	280	18	8	96
250	300	500	555	100	560	66	300	375	335	18	12	135
300	425	575	665	118	660	85	350	440	395	22	12	208
350	500		720	130	795	90	400	490	445	22	12	355
400	575		900	135	915	100	450	540	495	22	16	400
450	650			160		115	500	595	550	22	16	538
500				180		130	520	645	600	22	20	840
600				215		160	550	755	705	26	20	1460

Combinazione materiali standard – Standard materials Combination				
		A/316	A/B	CF8M/316
ITEM	DENOMINAZIONE DENOMINATION	MATERIALE MATERIAL	MATERIALE MATERIAL	MATERIALE MATERIAL
01	Body	Cast steel GP240-GH UNI EN10213	Cast steel GP240-GH UNI EN10213	Stainless steel CF8M ASTM A351
02	Bonnet	Cast steel GP240-GH UNI EN10213	Cast steel GP240-GH UNI EN10213	Stainless steel CF8M ASTM A351
03	Body seat	Stainless steel AISI316 UNI EN10088	Stainless steel AISI316 UNI EN10088	Stainless steel AISI316 UNI EN10088
04	Disc (≤ DN80)	Stainless steel AISI316 UNI EN10088	Bronze UNI EN1982 G-CuSn5Zn5Pb5	Stainless steel AISI316 UNI EN10088
04	Disc (≥ DN100)	Cast steel GP240-GH UNI EN10213 plus AISI316 facing welding	Bronze UNI EN1982 G-CuSn5Zn5Pb5	Stainless steel CF8M ASTM A351
05	Stem	Stainless steel AISI316 UNI EN10088	Brass CW617N (OT58)	Stainless steel AISI316 UNI EN10088
06	Handwheel	Sheet of carbon steel	Sheet of carbon steel	Sheet of carbon steel
07	Handle	Steel A37 UNI EN10217-1	Steel A37 UNI EN10217-1	Steel A37 UNI EN10217-1
08	Gasket	Planiflex KG carbo/C PF81	Planiflex KG carbo/C PF81	Planiflex KG carbo/C PF81
09	Packing	Carbograph GR8800	Carbograph GR8800	Carbograph GR8800
10	Gland bushing	Steel Fe360B (S235JRC) UNI EN10025	Steel Fe360B (S235JRC) UNI EN10025	Stainless steel AISI316 UNI EN10088

Nota: Combinazioni materiali non standard a richiesta
Note: Non standard materials combinations on request

Valvole ad angolo retto PN6 con attuatore idraulico doppio effetto
Angle valves NP6 with hydraulic double acting actuator

Tab.123A-DA

(Ex Tab. 129/1-DA)

Conform to:
UNI EN1092

Esecuzione 01
con otturatore Com.

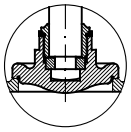

Execution 01
with SDSL disc

Esecuzione 02
con otturatore Aut.

Execution 02
with SDNR disc

con Proximity limit switch (a richiesta)
with Proximity limit switch (on request)

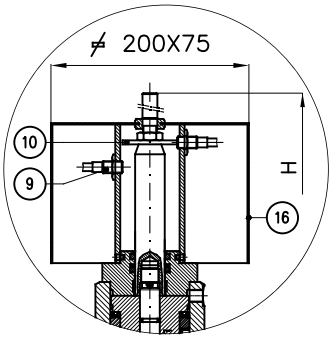

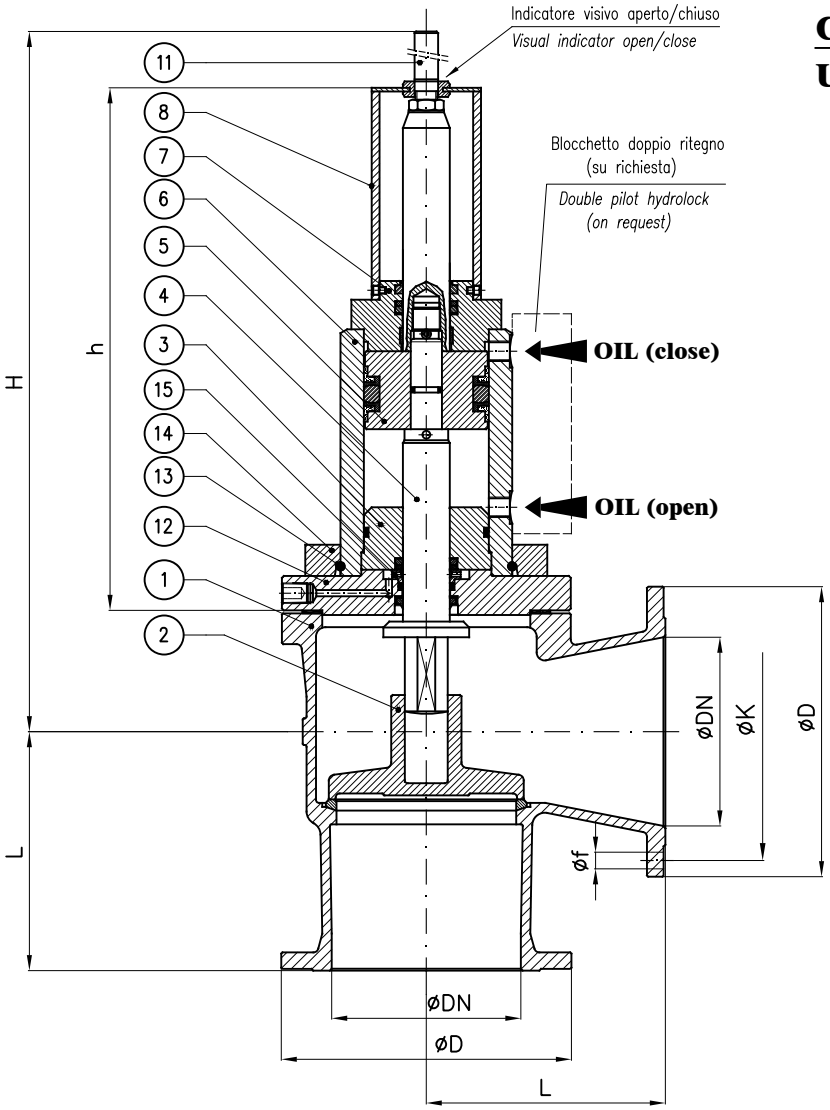

N.B.: Il dimensionamento e quindi anche l'ingombro dell'attuatore è funzione dei seguenti dati che devono sempre essere forniti:

- Pressione esercizio della valvola
- pressione olio all'attuatore
- Servizio

Note.: The size and so the overall dimension of the actuator depends by the following informations that should always be provided:

- *Valve's working pressure*
- *Oil pressure to actuator*
- *Service*

DN	h (~)	H (~)	L	øD	K	f	Holes NO. f	Weight (Kg)
20	210	265	85	90	65	11	4	
25	210	270	90	100	75	11	4	
32	335	415	105	120	90	14	4	
40	335	420	95	130	100	14	4	
50	320	420	100	140	110	14	4	
65	315	420	120	160	130	14	4	
80	340	445	130	190	150	18	4	
100	340	455	150	210	170	18	4	
125	360	495	175	240	200	18	8	
150	360	505	200	265	225	18	8	
200	440	655	250	320	280	18	8	
250	440	660	300	375	335	18	12	
300	525	850	350	440	395	22	12	

Combinazione materiali standard – Standard materials Combination

ITEM	DENOMINAZIONE DENOMINATION	A/316 MATERIALE MATERIAL	A/B MATERIALE MATERIAL	CF8M/316 MATERIALE MATERIAL
01	Body	Cast steel GP240–GH UNI EN10213	Cast steel GP240–GH UNI EN10213	Stainless steel CF8M ASTM A351
02	Disc (≤ DN80)	Stainless steel AISI316 UNI EN10088	Bronze UNI EN1982 G–CuSn5Zn5Pb5	Stainless steel AISI316 UNI EN10088
02	Disc (≥ DN100)	Cast steel GP240–GH UNI EN10213 plus AISI316 facing welding	Bronze UNI EN1982 G–CuSn5Zn5Pb5	Cast steel GP240–GH UNI EN10213 plus AISI316 facing welding
03	Inner head flange	Cast iron UNI EN1561 EN–GJL–250	Cast iron UNI EN1561 EN–GJL–250	Cast iron UNI EN1561 EN–GJL–250
04	Stem	Stainless steel AISI316 UNI EN10088	Stainless steel AISI316 UNI EN10088	Stainless steel AISI316 UNI EN10088
05	Piston	Steel 9SMnPb28 UNI EN10087	Steel 9SMnPb28 UNI EN10087	Steel 9SMnPb28 UNI EN10087
06	Housing welded assembly	Fe52.2 GALVANIZED	Fe52.2 GALVANIZED	Fe52.2 GALVANIZED
07	Head flange	Steel UNI C40	Steel UNI C40	Steel UNI C40
08	Proximity switch support	Fe37 GALVANIZED	Fe37 GALVANIZED	Fe37 GALVANIZED
09	Proximity switch	CEED BG12/2PF2 PNP CEOM E2FX2E2G NPN	CEED BG12/2PF2 PNP CEOM E2FX2E2G NPN	CEED BG12/2PF2 PNP CEOM E2FX2E2G NPN
10	Indicator washer	Steel 9SMnPb28 UNI EN10087	Steel 9SMnPb28 UNI EN10087	Steel 9SMnPb28 UNI EN10087
11	Index open/close	Brass CW617N (OT58)	Brass CW617N (OT58)	Brass CW617N (OT58)
12	Flange	Steel UNI C40	Steel UNI C40	Steel UNI C40
13	Snap ring ø5	Stainless steel AISI316 UNI EN10088	Stainless steel AISI316 UNI EN10088	Stainless steel AISI316 UNI EN10088
14	Collar	Fe52.2 GALVANIZED	Fe52.2 GALVANIZED	Fe52.2 GALVANIZED
15	Back rod	Steel 9SMnPb28 UNI EN10087	Steel 9SMnPb28 UNI EN10087	Steel 9SMnPb28 UNI EN10087
16	Shield	Stainless steel AISI316 UNI EN10088	Stainless steel AISI316 UNI EN10088	Stainless steel AISI316 UNI EN10088

Nota: Combinazioni materiali non standard a richiesta
Note: Non standard materials combinations on request

Valvole ad angolo retto PN6 con attuatore idraulico semplice effetto normalmente chiuso (FC)

Angle valves NP6 with hydraulic single acting actuator fail close (FC)

Tab.123A-SR-FC

(Ex Tab. 129/1-SR-FC)

Conform to:
UNI EN1092

Esecuzione 01
con otturatore Com.

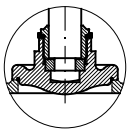

Execution 01
with SDSL disc

Esecuzione 02
con otturatore Aut.

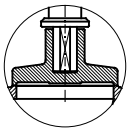

Execution 02
with SDNR disc

con Proximity limit switch (a richiesta)
with Proximity limit switch (on request)

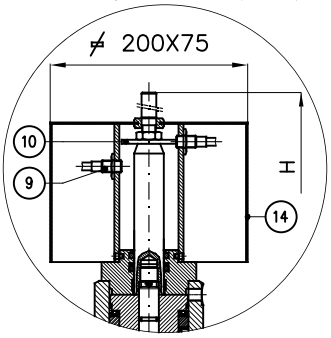

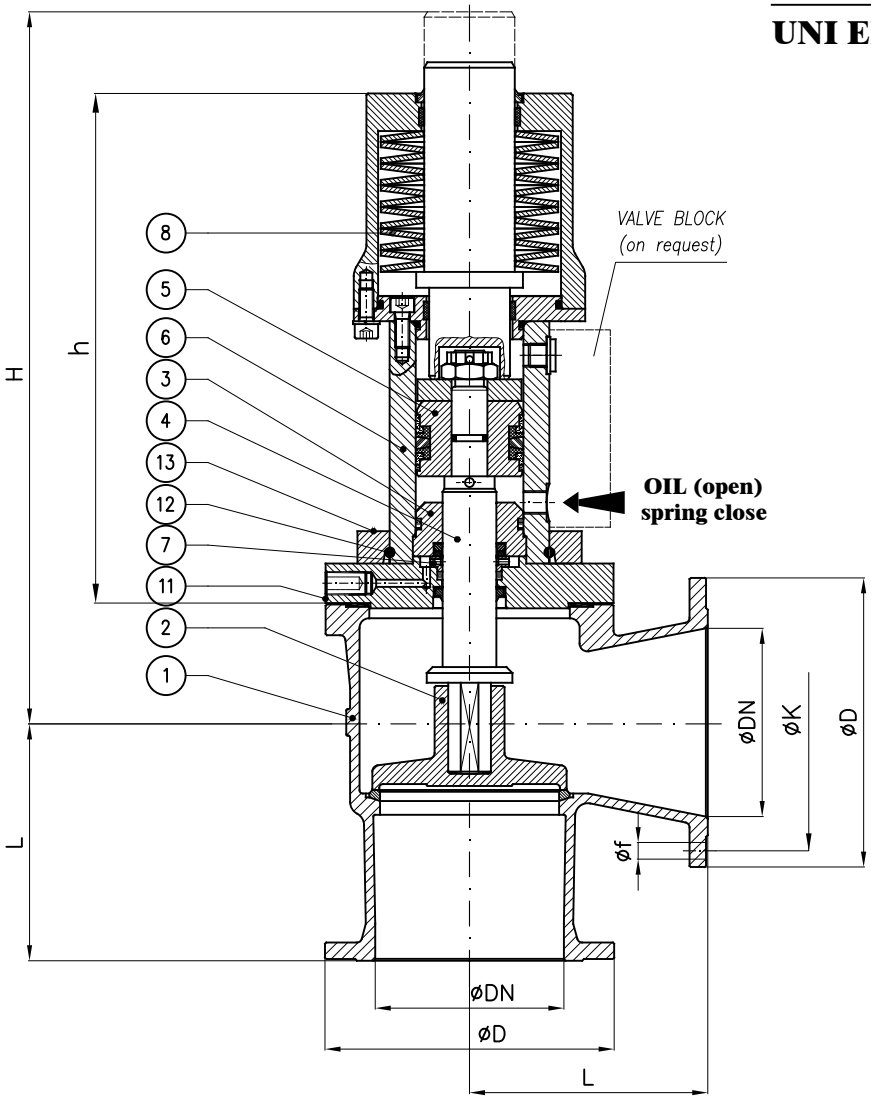

N.B.: Il dimensionamento e quindi anche l'ingombro dell'attuatore è funzione dei seguenti dati che devono sempre essere forniti:

- Pressione esercizio della valvola
- pressione olio all'attuatore
- Servizio

Note.: The size and so the overall dimension of the actuator depends by the following informations that should always be provided:

- *Valve's working pressure*
- *Oil pressure to actuator*
- *Service*

DN	h (~)	H (~)	L	øD	K	f	Holes NO. f	Weight (Kg)
32	305	385	105	120	90	14	4	
40	305	385	95	130	100	14	4	
50	295	385	100	140	110	14	4	
65	285	385	120	160	130	14	4	
80	335	435	130	190	150	18	4	
100	320	435	150	210	170	18	4	
125	420	550	175	240	200	18	8	
150	485	630	200	265	225	18	8	
200	485	675	250	320	280	18	8	
250	565	725	300	375	335	18	12	

Combinazione materiali standard – Standard materials Combination				
		A/316	A/B	CF8M/316
ITEM	DENOMINAZIONE DENOMINATION	MATERIALE MATERIAL	MATERIALE MATERIAL	MATERIALE MATERIAL
01	Body	Cast steel GP240–GH UNI EN10213	Cast steel GP240–GH UNI EN10213	Stainless steel CF8M ASTM A351
02	Disc (≤ DN80)	Stainless steel AISI316 UNI EN10088	Bronze UNI EN1982 G–CuSn5Zn5Pb5	Stainless steel AISI316 UNI EN10088
02	Disc (≥ DN100)	Cast steel GP240–GH UNI EN10213 plus AISI316 facing welding	Bronze UNI EN1982 G–CuSn5Zn5Pb5	Cast steel GP240–GH UNI EN10213 plus AISI316 facing welding
03	Inner head flange	Cast iron UNI EN1561 EN–GJL–250	Cast iron UNI EN1561 EN–GJL–250	Cast iron UNI EN1561 EN–GJL–250
04	Stem	Stainless steel AISI316 UNI EN10088	Stainless steel AISI316 UNI EN10088	Stainless steel AISI316 UNI EN10088
05	Piston	Steel 9SMnPb28 UNI EN10087	Steel 9SMnPb28 UNI EN10087	Steel 9SMnPb28 UNI EN10087
06	Housing assembly	Fe52.2 GALVANIZED	Fe52.2 GALVANIZED	Fe52.2 GALVANIZED
07	Back rod	Steel 9SMnPb28 UNI EN10087	Steel 9SMnPb28 UNI EN10087	Steel 9SMnPb28 UNI EN10087
08	Disk spring	Steel UNI EN10270	Steel UNI EN10270	Steel UNI EN10270
09	Proximity switch	CEED BG12/2PF2 PNP CEOM E2FX2E2G NPN	CEED BG12/2PF2 PNP CEOM E2FX2E2G NPN	CEED BG12/2PF2 PNP CEOM E2FX2E2G NPN
10	Indicator washer	Steel 9SMnPb28 UNI EN10087	Steel 9SMnPb28 UNI EN10087	Steel 9SMnPb28 UNI EN10087
11	Flange	Steel UNI C40	Steel UNI C40	Steel UNI C40
12	Snap ring ø5	Stainless steel AISI316 UNI EN10088	Stainless steel AISI316 UNI EN10088	Stainless steel AISI316 UNI EN10088
13	Collar	Fe52.2 GALVANIZED	Fe52.2 GALVANIZED	Fe52.2 GALVANIZED
14	Shield	Stainless steel AISI316 UNI EN10088	Stainless steel AISI316 UNI EN10088	Stainless steel AISI316 UNI EN10088
Nota: Combinazioni materiali non standard a richiesta Note: Non standard materials combinations on request				

Valvole ad angolo retto PN6 con attuatore idraulico semplice effetto normalmente aperto (FO)

Angle valves NP6 with hydraulic single acting actuator fail open (FO)

Tab.123A-SR-FO

(Ex Tab. 129/1-SR-FO)

Conform to:
UNI EN1092

Esecuzione 01
con otturatore Com.

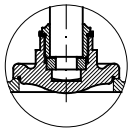

Execution 01
with SDSL disc

Esecuzione 02
con otturatore Aut.

Execution 02
with SDNR disc

con Proximity limit switch (a richiesta)
with Proximity limit switch (on request)

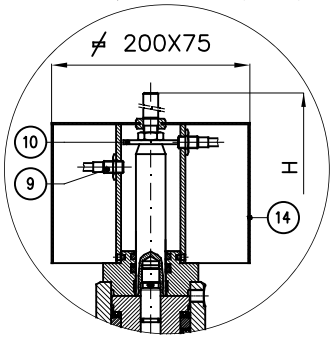

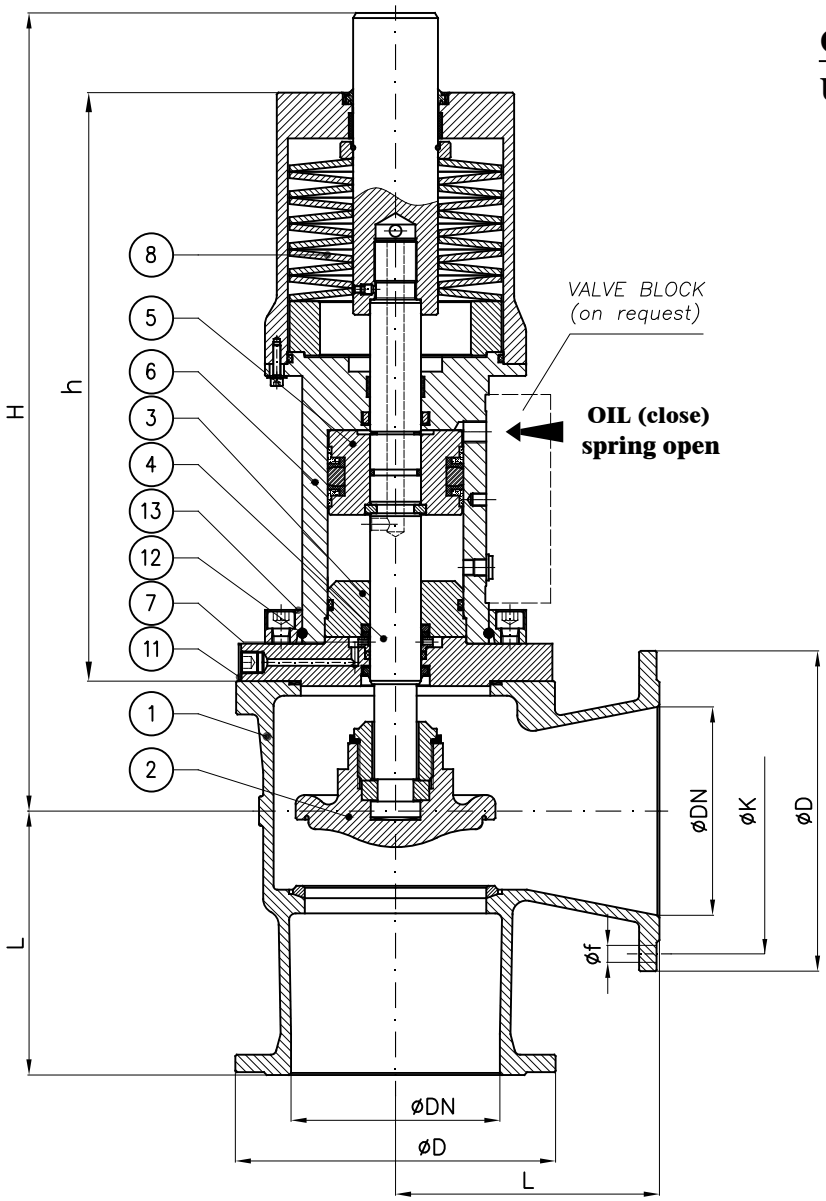

N.B.: Il dimensionamento e quindi anche l'ingombro dell'attuatore è funzione dei seguenti dati che devono sempre essere forniti:

- Pressione esercizio della valvola
- pressione olio all'attuatore
- Servizio

Note.: The size and so the overall dimension of the actuator depends by the following informations that should always be provided:

- *Valve's working pressure*
- *Oil pressure to actuator*
- *Service*

DN	h (~)	H (~)	L	øD	K	f	Holes NO. f	Weight (Kg)
32	305	385	105	120	90	14	4	
40	305	385	95	130	100	14	4	
50	295	385	100	140	110	14	4	
65	285	385	120	160	130	14	4	
80	335	435	130	190	150	18	4	
100	320	435	150	210	170	18	4	
125	420	550	175	240	200	18	8	
150	485	630	200	265	225	18	8	
200	485	675	250	320	280	18	8	
250	565	725	300	375	335	18	12	

Combinazione materiali standard – Standard materials Combination				
		A/316	A/B	CF8M/316
ITEM	DENOMINAZIONE DENOMINATION	MATERIALE MATERIAL	MATERIALE MATERIAL	MATERIALE MATERIAL
01	Body	Cast steel GP240-GH UNI EN10213	Cast steel GP240-GH UNI EN10213	Stainless steel CF8M ASTM A351
02	Disc (≤ DN80)	Stainless steel AISI316 UNI EN10088	Bronze UNI EN1982 G-CuSn5Zn5Pb5	Stainless steel AISI316 UNI EN10088
02	Disc (≥ DN100)	Cast steel GP240-GH UNI EN10213 plus AISI316 facing welding	Bronze UNI EN1982 G-CuSn5Zn5Pb5	Cast steel GP240-GH UNI EN10213 plus AISI316 facing welding
03	Inner head flange	Cast iron UNI EN1561 EN-GJL-250	Cast iron UNI EN1561 EN-GJL-250	Cast iron UNI EN1561 EN-GJL-250
04	Stem	Stainless steel AISI316 UNI EN10088	Stainless steel AISI316 UNI EN10088	Stainless steel AISI316 UNI EN10088
05	Piston	Steel 9SMnPb28 UNI EN10087	Steel 9SMnPb28 UNI EN10087	Steel 9SMnPb28 UNI EN10087
06	Housing assembly	Fe52.2 GALVANIZED	Fe52.2 GALVANIZED	Fe52.2 GALVANIZED
07	Back rod	Steel 9SMnPb28 UNI EN10087	Steel 9SMnPb28 UNI EN10087	Steel 9SMnPb28 UNI EN10087
08	Disk spring	Steel UNI EN10270	Steel UNI EN10270	Steel UNI EN10270
09	Proximity switch	CEED BG12/2PF2 PNP CEOM E2FX2E2G NPN	CEED BG12/2PF2 PNP CEOM E2FX2E2G NPN	CEED BG12/2PF2 PNP CEOM E2FX2E2G NPN
10	Indicator washer	Steel 9SMnPb28 UNI EN10087	Steel 9SMnPb28 UNI EN10087	Steel 9SMnPb28 UNI EN10087
11	Flange	Steel UNI C40	Steel UNI C40	Steel UNI C40
12	Snap ring ø5	Stainless steel AISI316 UNI EN10088	Stainless steel AISI316 UNI EN10088	Stainless steel AISI316 UNI EN10088
13	Collar	Fe52.2 GALVANIZED	Fe52.2 GALVANIZED	Fe52.2 GALVANIZED
14	Shield	Stainless steel AISI316 UNI EN10088	Stainless steel AISI316 UNI EN10088	Stainless steel AISI316 UNI EN10088

Nota: Combinazioni materiali non standard a richiesta
Note: Non standard materials combinations on request

Valvole ad angolo retto - serie pesante PN6
Angle valves - heavy class NP6

Tab.123B

Conform to:
UNI EN1092

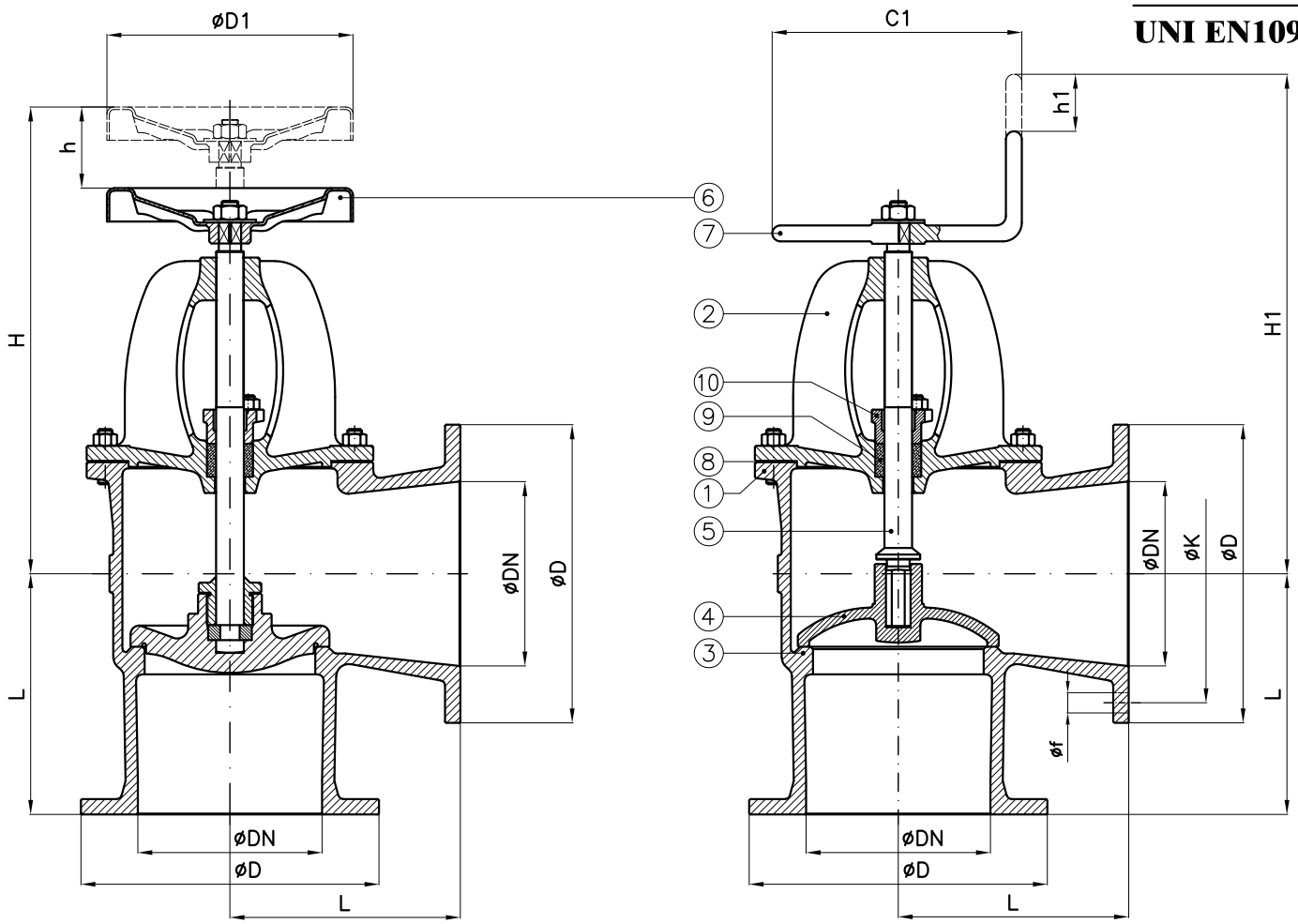

Tab.123.1B PN6	
comandata (SDSL) with fixed disc (SDSL)	UNAV 9808

Tab.123.2B PN6	
semiautomatica (SDNR) with loose disc (SDNR)	UNAV 9811

DN	C1	D1	H SDSL (~)	h SDSL	H1 SDNR (~)	h1 SDNR	L	D	K	f	Holes NO. f	Weight (Kg)
40	125	125	230	20	255	12	95	130	100	14	4	10
50	125	125	235	24	265	14	100	140	110	14	4	11
65	175	175	295	32	315	18	120	160	130	14	4	18
80	175	175	305	35	330	20	130	190	150	18	4	24
100	200	200	350	45	360	28	150	210	170	18	4	34
125	225	225	380	54	390	32	175	240	200	18	8	53
150	225	300	405	62	420	38	200	265	225	18	8	63
175	250	400	485	74	485	45	230	295	255	18	8	102
200	250	400	510	82	520	50	250	320	280	18	8	105
250	300	500	573	100	580	66	300	375	335	18	12	158
300	425	575	680	118	690	85	350	440	395	22	12	230
350	500		830	130	815	90	400	490	445	22	12	408
400	575		910	135	920	100	450	540	495	22	16	470
450	650			160		115	500	595	550	22	16	592
500				180		130	520	645	600	22	20	
600				215		160	550	755	705	26	20	

Combinazione materiali standard – Standard materials Combination			
		B/316	B/B
ITEM	DENOMINAZIONE DENOMINATION	MATERIALE MATERIAL	MATERIALE MATERIAL
01	Body	Bronze UNI EN1982 G-CuSn5Zn5Pb5	Bronze UNI EN1982 G-CuSn5Zn5Pb5
02	Bonnet	Bronze UNI EN1982 G-CuSn5Zn5Pb5	Bronze UNI EN1982 G-CuSn5Zn5Pb5
03	Integral body seat	Bronze UNI EN1982 G-CuSn5Zn5Pb5	Bronze UNI EN1982 G-CuSn5Zn5Pb5
04	Disc	Stainless steel AISI316 UNI EN10088	Bronze UNI EN1982 G-CuSn5Zn5Pb5
05	Stem	Stainless steel AISI316 UNI EN10088	Brass CW617N (OT58)
06	Handwheel	Sheet of carbon steel	Sheet of carbon steel
07	Handle	Steel A37 UNI EN10217-1	Steel A37 UNI EN10217-1
08	Gasket	EPDM	EPDM
09	Packing	Carbograph GR8800	Carbograph GR8800
10	Gland bushing	Brass CW509L (OT60)	Brass CW509L (OT60)
Nota: Combinazioni materiali non standard a richiesta Note: Non standard materials combinations on request			

Valvole ad angolo retto PN6 con attuatore idraulico doppio effetto
Angle valves NP6 with hydraulic double acting actuator

Tab.123B-DA

(Ex Tab. 129/1-DA)

Conform to:
UNI EN1092

Esecuzione 01
con otturatore Com.

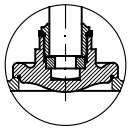

Execution 01
with SDSL disc

Esecuzione 02
con otturatore Aut.

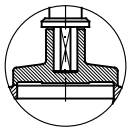

Execution 02
with SDNR disc

con Proximity limit switch (a richiesta)
with Proximity limit switch (on request)

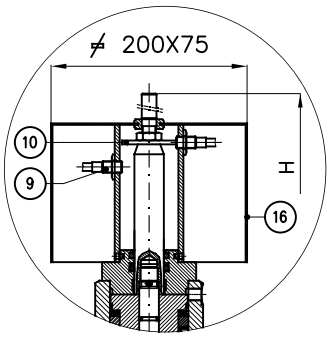

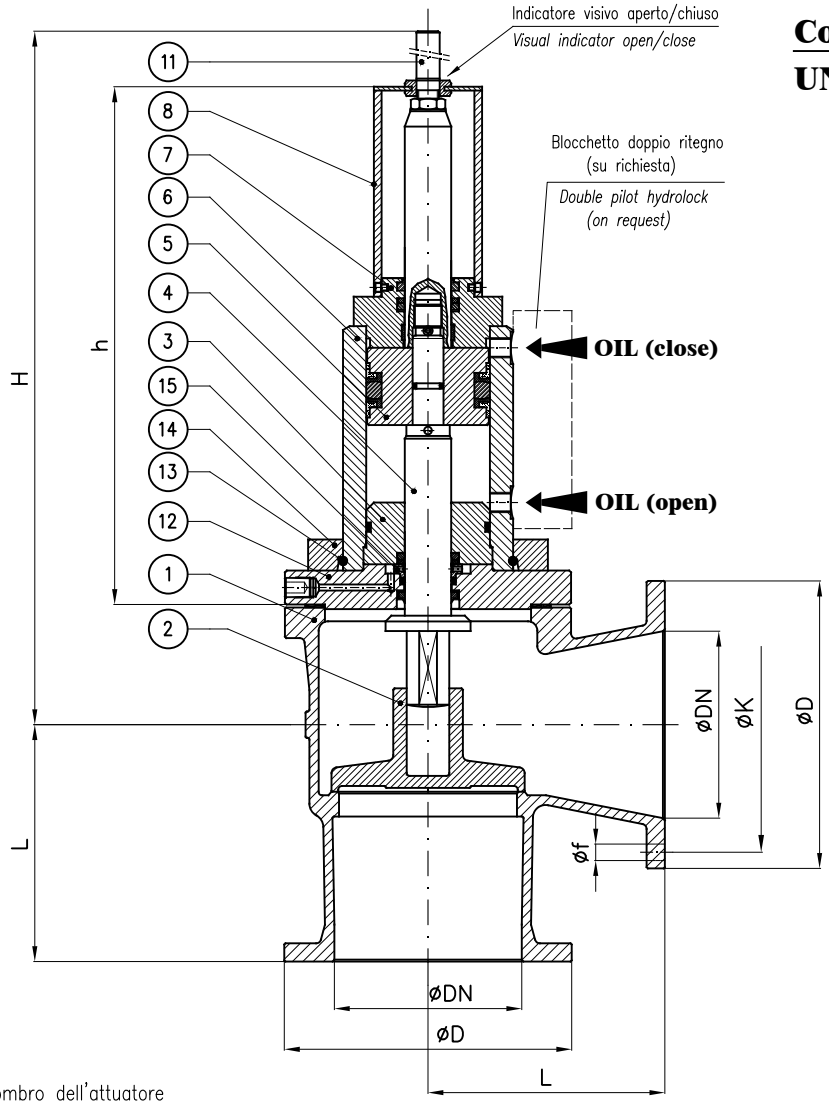

N.B.: Il dimensionamento e quindi anche l'ingombro dell'attuatore è funzione dei seguenti dati che devono sempre essere forniti:

- Pressione esercizio della valvola
- pressione olio all'attuatore
- Servizio

Note.: The size and so the overall dimension of the actuator depends by the following informations that should always be provided:

- *Valve's working pressure*
- *Oil pressure to actuator*
- *Service*

DN	h (~)	H (~)	L	øD	K	f	Holes NO. f	Weight (Kg)
20	210	265	85	90	65	11	4	
25	210	270	90	100	75	11	4	
32	335	415	105	120	90	14	4	
40	335	420	95	130	100	14	4	
50	320	420	100	140	110	14	4	
65	315	420	120	160	130	14	4	
80	340	445	130	190	150	18	4	
100	340	455	150	210	170	18	4	
125	360	495	175	240	200	18	8	
150	360	505	200	265	225	18	8	
200	440	655	250	320	280	18	8	
250	440	660	300	375	335	18	12	
300	525	850	350	440	395	22	12	

Combinazione materiali standard – Standard materials Combination			
		B/316	B/B
ITEM	DENOMINAZIONE DENOMINATION	MATERIALE MATERIAL	MATERIALE MATERIAL
01	Body	Bronze UNI EN1982 G-CuSn5Zn5Pb5	Bronze UNI EN1982 G-CuSn5Zn5Pb5
02	Disc (≤ DN80)	Stainless steel AISI316 UNI EN10088	Bronze UNI EN1982 G-CuSn5Zn5Pb5
02	Disc (≥ DN100)	Cast steel GP240-GH UNI EN10213 plus AISI316 facing welding	Bronze UNI EN1982 G-CuSn5Zn5Pb5
03	Inner head flange	Cast iron UNI EN1561 EN-GJL-250	Cast iron UNI EN1561 EN-GJL-250
04	Stem	Stainless steel AISI316 UNI EN10088	Stainless steel AISI316 UNI EN10088
05	Piston	Steel 9SMnPb28 UNI EN10087	Steel 9SMnPb28 UNI EN10087
06	Housing welded assembly	Fe52.2 GALVANIZED	Fe52.2 GALVANIZED
07	Head flange	Steel UNI C40	Steel UNI C40
08	Proximity switch support	Fe37 GALVANIZED	Fe37 GALVANIZED
09	Proximity switch	CEED BG12/2PF2 PNP CEOM E2FX2E2G NPN	CEED BG12/2PF2 PNP CEOM E2FX2E2G NPN
10	Indicator washer	Steel 9SMnPb28 UNI EN10087	Steel 9SMnPb28 UNI EN10087
11	Index open/close	Brass CW617N (OT58)	Brass CW617N (OT58)
12	Flange	Bronze UNI EN1982	Bronze UNI EN1982
13	Snap ring ø5	Stainless steel AISI316 UNI EN10088	Stainless steel AISI316 UNI EN10088
14	Collar	Fe52.2 GALVANIZED	Fe52.2 GALVANIZED
15	Back rod	Steel 9SMnPb28 UNI EN10087	Steel 9SMnPb28 UNI EN10087
16	Shield	Stainless steel AISI316 UNI EN10088	Stainless steel AISI316 UNI EN10088
Nota: Combinazioni materiali non standard a richiesta Note: Non standard materials combinations on request			

Valvole ad angolo retto PN6 con attuatore idraulico semplice effetto normalmente chiuso (FC)

Angle valves NP6 with hydraulic single acting actuator fail close (FC)

Tab.123B-SR-FC

(Ex Tab. 129/1-SR-FC)

Conform to:
UNI EN1092

Esecuzione 01
con otturatore Com.

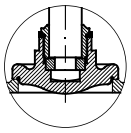

Execution 01
with SDSL disc

Esecuzione 02
con otturatore Aut.

Execution 02
with SDNR disc

con Proximity limit switch (a richiesta)
with Proximity limit switch (on request)

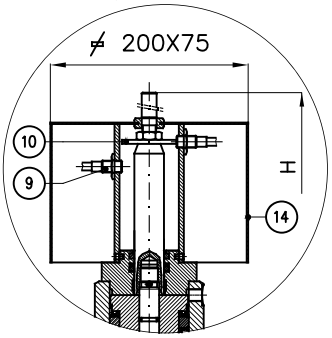

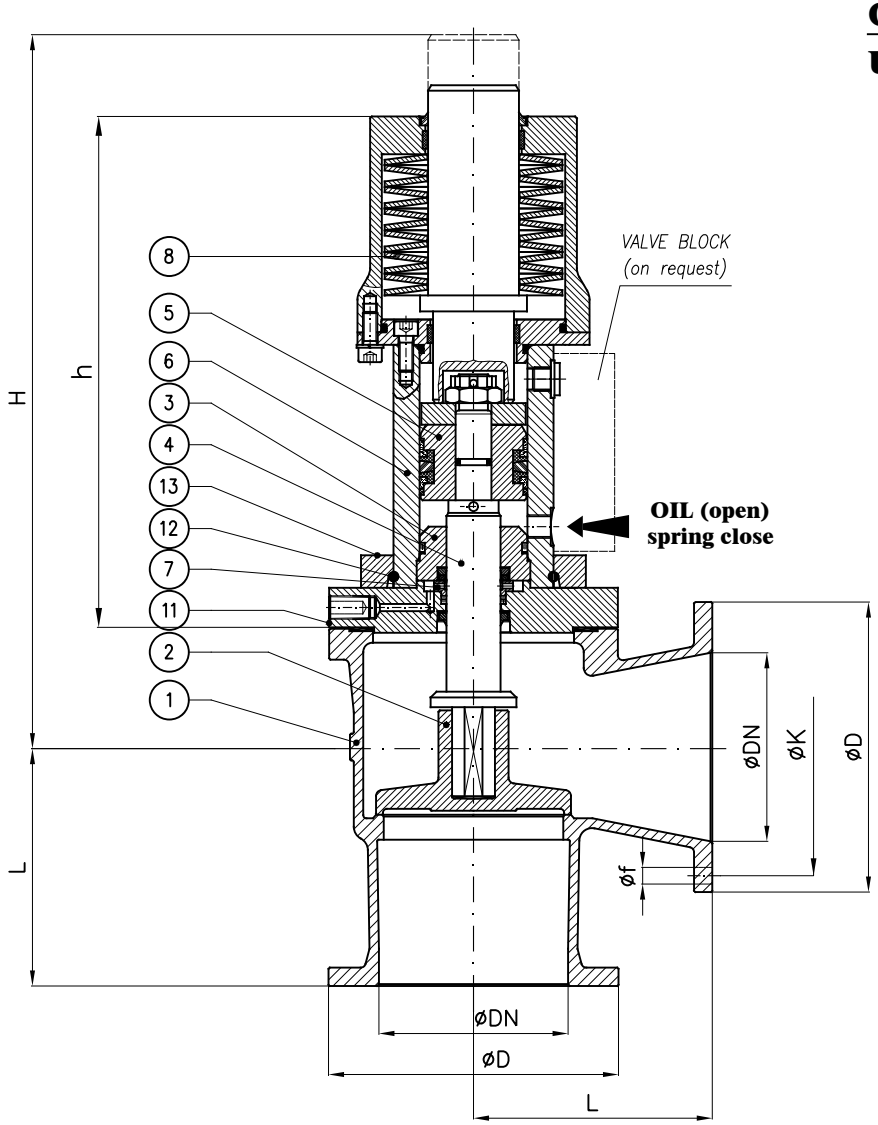

N.B.: Il dimensionamento e quindi anche l'ingombro dell'attuatore è funzione dei seguenti dati che devono sempre essere forniti:

- Pressione esercizio della valvola
- pressione olio all'attuatore
- Servizio

Note.: The size and so the overall dimension of the actuator depends by the following informations that should always be provided:

- *Valve's working pressure*
- *Oil pressure to actuator*
- *Service*

DN	h (~)	H (~)	L	øD	K	f	Holes NO. f	Weight (Kg)
32	305	385	105	120	90	14	4	
40	305	385	95	130	100	14	4	
50	295	385	100	140	110	14	4	
65	285	385	120	160	130	14	4	
80	335	435	130	190	150	18	4	
100	320	435	150	210	170	18	4	
125	420	550	175	240	200	18	8	
150	485	630	200	265	225	18	8	
200	485	675	250	320	280	18	8	
250	565	725	300	375	335	18	12	

Combinazione materiali standard – Standard materials Combination

ITEM	DENOMINAZIONE DENOMINATION	B/316 MATERIALE MATERIAL	B/B MATERIALE MATERIAL
01	Body	Bronze UNI EN1982 G-CuSn5Zn5Pb5	Bronze UNI EN1982 G-CuSn5Zn5Pb5
02	Disc (≤ DN80)	Stainless steel AISI316 UNI EN10088	Bronze UNI EN1982 G-CuSn5Zn5Pb5
02	Disc (≥ DN100)	Cast steel GP240-GH UNI EN10213 plus AISI316 facing welding	Bronze UNI EN1982 G-CuSn5Zn5Pb5
03	Inner head flange	Cast iron UNI EN1561 EN-GJL-250	Cast iron UNI EN1561 EN-GJL-250
04	Stem	Stainless steel AISI316 UNI EN10088	Stainless steel AISI316 UNI EN10088
05	Piston	Steel 9SMnPb28 UNI EN10087	Steel 9SMnPb28 UNI EN10087
06	Housing assembly	Fe52.2 GALVANIZED	Fe52.2 GALVANIZED
07	Back rod	Steel 9SMnPb28 UNI EN10087	Steel 9SMnPb28 UNI EN10087
08	Disk spring	Steel UNI EN10270	Steel UNI EN10270
09	Proximity switch	CEED BG12/2PF2 PNP CEOM E2FX2E2G NPN	CEED BG12/2PF2 PNP CEOM E2FX2E2G NPN
10	Indicator washer	Steel 9SMnPb28 UNI EN10087	Steel 9SMnPb28 UNI EN10087
11	Flange	Bronze UNI EN1982	Bronze UNI EN1982
12	Snap ring ø5	Stainless steel AISI316 UNI EN10088	Stainless steel AISI316 UNI EN10088
13	Collar	Fe52.2 GALVANIZED	Fe52.2 GALVANIZED
14	Shield	Stainless steel AISI316 UNI EN10088	Stainless steel AISI316 UNI EN10088

Nota: Combinazioni materiali non standard a richiesta
Note: Non standard materials combinations on request

Valvole ad angolo retto PN6 con attuatore idraulico semplice effetto normalmente aperto (FO)

Angle valves NP6 with hydraulic single acting actuator fail open (FO)

Tab.123B-SR-FO

(Ex Tab. 129/1-SR-FO)

Conform to:
UNI EN1092

Esecuzione 01
con otturatore Com.

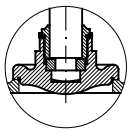

Execution 01
with SDSL disc

Esecuzione 02
con otturatore Aut.

Execution 02
with SDNR disc

con Proximity limit switch (a richiesta)
with Proximity limit switch (on request)

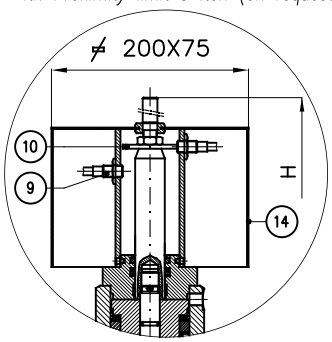

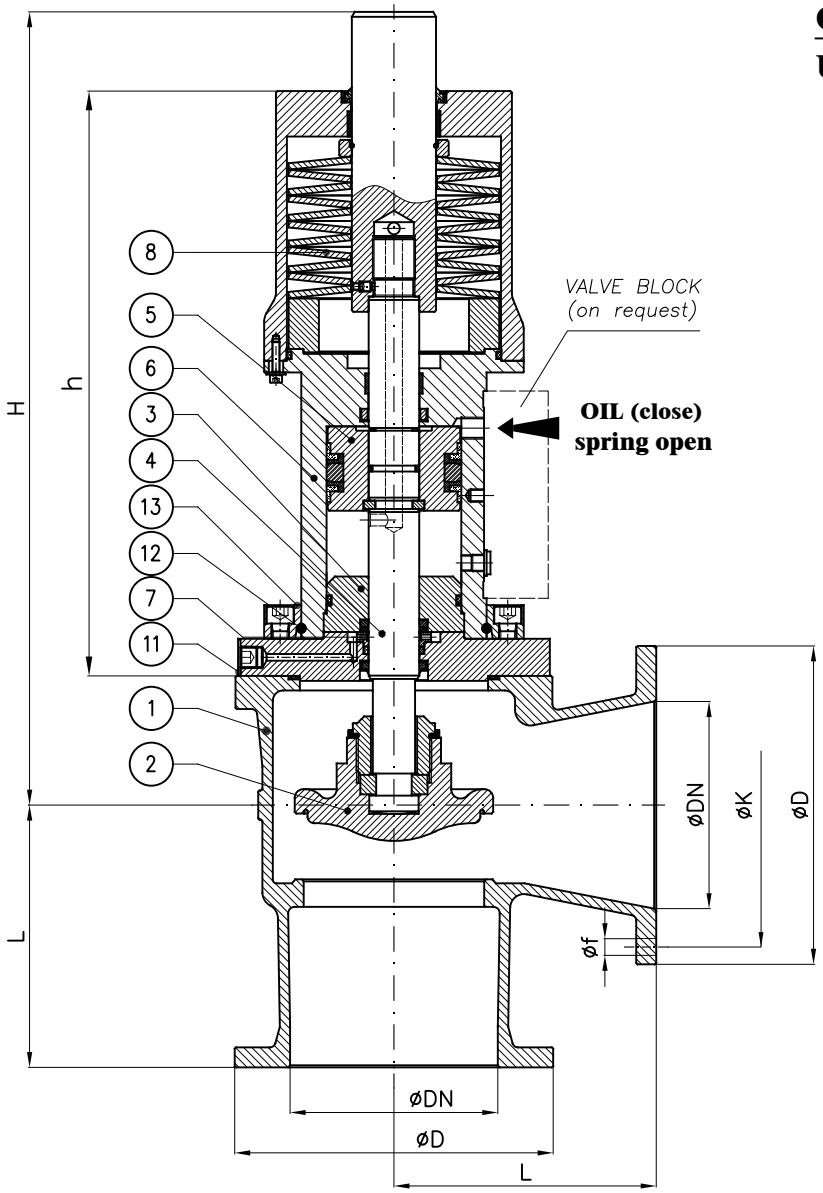

N.B.: Il dimensionamento e quindi anche l'ingombro dell'attuatore è funzione dei seguenti dati che devono sempre essere forniti:

- Pressione esercizio della valvola
- pressione olio all'attuatore
- Servizio

Note.: The size and so the overall dimension of the actuator depends by the following informations that should always be provided:

- *Valve's working pressure*
- *Oil pressure to actuator*
- *Service*

DN	h (~)	H (~)	L	øD	K	f	Holes NO. f	Weight (Kg)
32	305	385	105	120	90	14	4	
40	305	385	95	130	100	14	4	
50	295	385	100	140	110	14	4	
65	285	385	120	160	130	14	4	
80	335	435	130	190	150	18	4	
100	320	435	150	210	170	18	4	
125	420	550	175	240	200	18	8	
150	485	630	200	265	225	18	8	
200	485	675	250	320	280	18	8	
250	565	725	300	375	335	18	12	

Combinazione materiali standard – Standard materials Combination

ITEM	DENOMINAZIONE DENOMINATION	B/316 MATERIALE MATERIAL	B/B MATERIALE MATERIAL
01	Body	Bronze UNI EN1982 G-CuSn5Zn5Pb5	Bronze UNI EN1982 G-CuSn5Zn5Pb5
02	Disc (≤ DN80)	Stainless steel AISI316 UNI EN10088	Bronze UNI EN1982 G-CuSn5Zn5Pb5
02	Disc (≥ DN100)	Cast steel GP240-GH UNI EN10213 plus AISI316 facing welding	Bronze UNI EN1982 G-CuSn5Zn5Pb5
03	Inner head flange	Cast iron UNI EN1561 EN-GJL-250	Cast iron UNI EN1561 EN-GJL-250
04	Stem	Stainless steel AISI316 UNI EN10088	Stainless steel AISI316 UNI EN10088
05	Piston	Steel 9SMnPb28 UNI EN10087	Steel 9SMnPb28 UNI EN10087
06	Housing assembly	Fe52.2 GALVANIZED	Fe52.2 GALVANIZED
07	Back rod	Steel 9SMnPb28 UNI EN10087	Steel 9SMnPb28 UNI EN10087
08	Disk spring	Steel UNI EN10270	Steel UNI EN10270
09	Proximity switch	CEED BG12/2PF2 PNP CEOM E2FX2E2G NPN	CEED BG12/2PF2 PNP CEOM E2FX2E2G NPN
10	Indicator washer	Steel 9SMnPb28 UNI EN10087	Steel 9SMnPb28 UNI EN10087
11	Flange	Bronze UNI EN1982	Bronze UNI EN1982
12	Snap ring ø5	Stainless steel AISI316 UNI EN10088	Stainless steel AISI316 UNI EN10088
13	Collar	Fe52.2 GALVANIZED	Fe52.2 GALVANIZED
14	Shield	Stainless steel AISI316 UNI EN10088	Stainless steel AISI316 UNI EN10088

Nota: Combinazioni materiali non standard a richiesta
Note: Non standard materials combinations on request

Valvole ad angolo retto - serie pesante PN6
Angle valves - heavy class NP6

Tab.123G

Conform to:
UNI EN1092

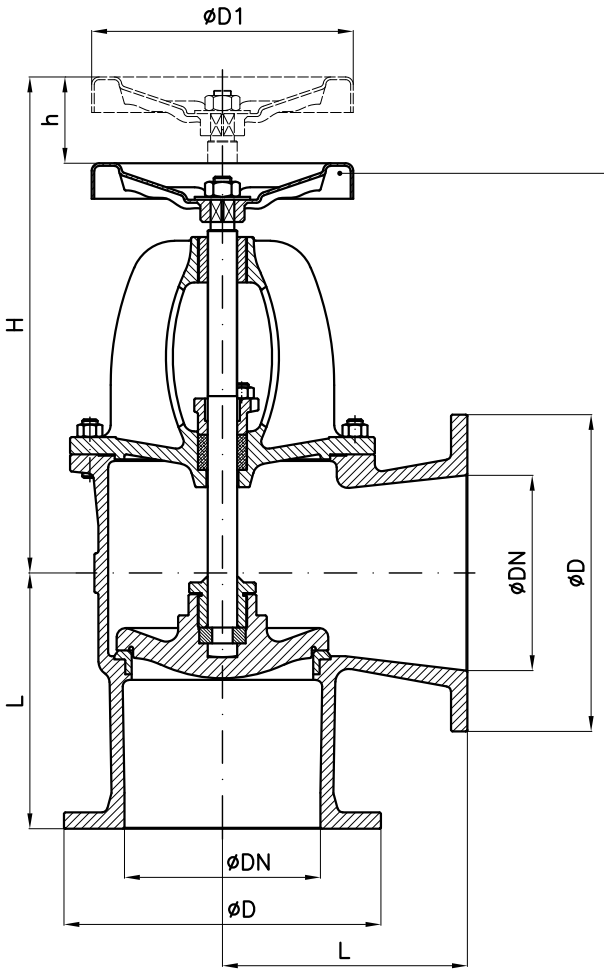

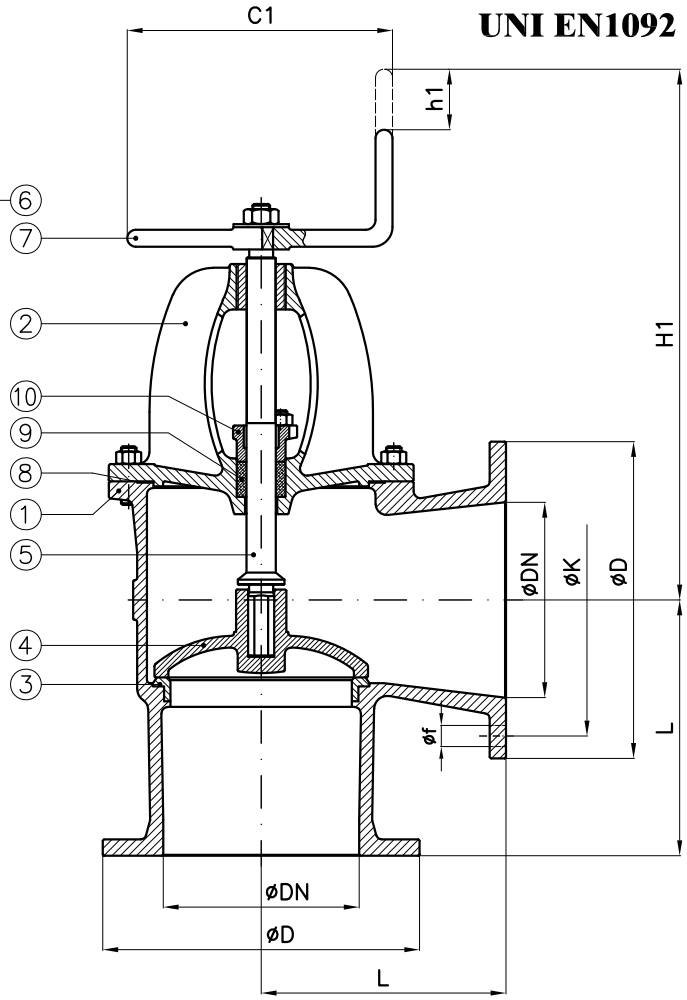

Tab.123.1G PN6	
comandata (SDSL) with fixed disc (SDSL)	UNI 3419 UNAV 8415

Tab.123.2G PN6	
semiautomatica (SDNR) with loose disc (SDNR)	UNI 3423 UNAV 8423

DN	C1	D1	H SDSL (~)	h SDSL	H1 SDNR (~)	h1 SDNR	L	D	K	f	Holes NO. f	Weight (Kg)
40	125	125	230	20	255	12	95	130	100	14	4	10
50	125	125	230	24	255	14	100	140	110	14	4	11
65	175	175	290	32	310	18	120	160	130	14	4	16.5
80	175	175	300	35	325	20	130	190	150	18	4	21
100	200	200	345	45	345	28	150	210	170	18	4	29
125	225	225	380	54	390	32	175	240	200	18	8	46
150	225	300	405	62	420	38	200	265	225	18	8	60
175	250	400	470	74	490	45	230	295	255	18	8	81
200	250	400	500	82	510	50	250	320	280	18	8	96
250	300	500	585	100	570	66	300	375	335	18	12	151
300	425	575	680	118	680	85	350	440	395	22	12	228
350	500		805	130	845	90	400	490	445	22	12	355
400	575		910	135	915	100	450	540	495	22	16	400
450	650		950	160	1000	115	500	595	550	22	16	538
500				180		130	520	645	600	22	20	
600				215		160	550	755	705	26	20	

Combinazione materiali standard – Standard materials Combination			
		G/316	G/B
ITEM	DENOMINAZIONE DENOMINATION	MATERIALE MATERIAL	MATERIALE MATERIAL
01	Body	Cast iron UNI EN1561 EN-GJL-250	Cast iron UNI EN1561 EN-GJL-250
02	Bonnet	Cast iron UNI EN1561 EN-GJL-250	Cast iron UNI EN1561 EN-GJL-250
03	Body seat	Stainless steel AISI316 UNI EN10088	Stainless steel AISI316 UNI EN10088
04	Disc (≤ DN80)	Stainless steel AISI316 UNI EN10088	Bronze UNI EN1982 G-CuSn5Zn5Pb5
04	Disc (≥ DN100)	Cast steel GP240-GH UNI EN10213 plus AISI316 facing welding	Bronze UNI EN1982 G-CuSn5Zn5Pb5
05	Stem	Stainless steel AISI316 UNI EN10088	Brass CW617N (OT58)
06	Handwheel	Sheet of carbon steel	Sheet of carbon steel
07	Handle	Steel A37 UNI EN10217-1	Steel A37 UNI EN10217-1
08	Gasket	Planiflex KG carbo/C PF81	Planiflex KG carbo/C PF81
09	Packing	Carbograph GR8800	Carbograph GR8800
10	Gland bushing	Bronze UNI EN1982 G-CuSn5Zn5Pb5	Bronze UNI EN1982 G-CuSn5Zn5Pb5
Nota: Combinazioni materiali non standard a richiesta Note: Non standard materials combinations on request			

Valvole ad angolo retto PN6 con attuatore idraulico doppio effetto
Angle valves NP6 with hydraulic double acting actuator

Tab.123G-DA

Conform to:
UNI EN1092

Esecuzione 01
con otturatore Com.

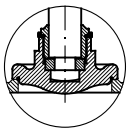

Execution 01
with SDSL disc

Esecuzione 02
con otturatore Aut.

Execution 02
with SDNR disc

con Proximity limit switch (a richiesta)
with Proximity limit switch (on request)

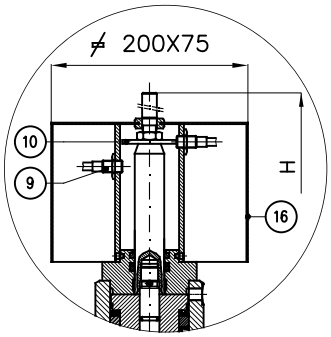

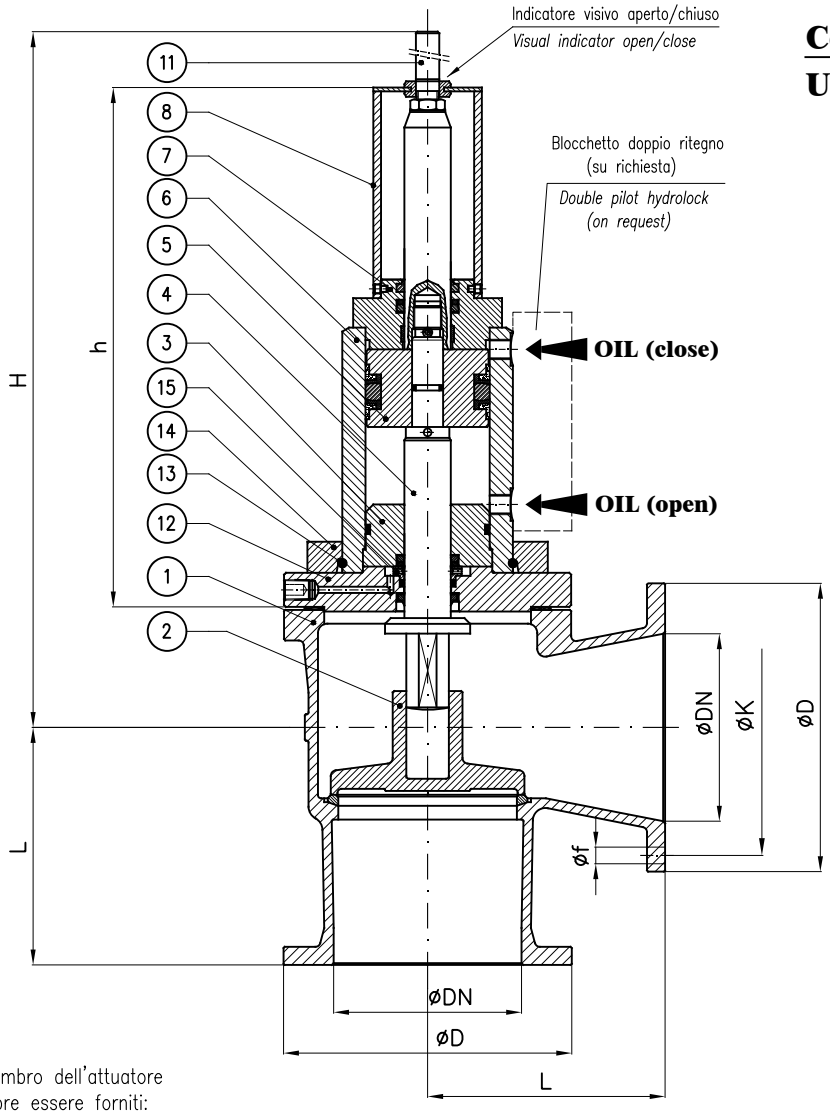

N.B.: Il dimensionamento e quindi anche l'ingombro dell'attuatore è funzione dei seguenti dati che devono sempre essere forniti:

- Pressione esercizio della valvola
- pressione olio all'attuatore
- Servizio

Note.: The size and so the overall dimension of the actuator depends by the following informations that should always be provided:

- *Valve's working pressure*
- *Oil pressure to actuator*
- *Service*

DN	h (~)	H (~)	L	øD	K	f	Holes NO. f	Weight (Kg)
20	210	265	85	90	65	11	4	
25	210	270	90	100	75	11	4	
32	335	415	105	120	90	14	4	
40	335	420	95	130	100	14	4	
50	320	420	100	140	110	14	4	
65	315	420	120	160	130	14	4	
80	340	445	130	190	150	18	4	
100	340	455	150	210	170	18	4	
125	360	495	175	240	200	18	8	
150	360	505	200	265	225	18	8	
200	440	655	250	320	280	18	8	
250	440	660	300	375	335	18	12	
300	525	850	350	440	395	22	12	

Combinazione materiali standard – Standard materials Combination			
		G/316	G/B
ITEM	DENOMINAZIONE DENOMINATION	MATERIALE MATERIAL	MATERIALE MATERIAL
01	Body	Cast iron UNI EN1561 EN-GJL-250	Cast iron UNI EN1561 EN-GJL-250
02	Disc (≤ DN80)	Stainless steel AISI316 UNI EN10088	Bronze UNI EN1982 G-CuSn5Zn5Pb5
02	Disc (≥ DN100)	Cast steel GP240-GH UNI EN10213 plus AISI316 facing welding	Bronze UNI EN1982 G-CuSn5Zn5Pb5
03	Inner head flange	Cast iron UNI EN1561 EN-GJL-250	Cast iron UNI EN1561 EN-GJL-250
04	Stem	Stainless steel AISI316 UNI EN10088	Stainless steel AISI316 UNI EN10088
05	Piston	Steel 9SMnPb28 UNI EN10087	Steel 9SMnPb28 UNI EN10087
06	Housing welded assembly	Fe52.2 GALVANIZED	Fe52.2 GALVANIZED
07	Head flange	Steel UNI C40	Steel UNI C40
08	Proximity switch support	Fe37 GALVANIZED	Fe37 GALVANIZED
09	Proximity switch	CEED BG12/2PF2 PNP CEOM E2FX2E2G NPN	CEED BG12/2PF2 PNP CEOM E2FX2E2G NPN
10	Indicator washer	Steel 9SMnPb28 UNI EN10087	Steel 9SMnPb28 UNI EN10087
11	Index open/close	Brass CW617N (OT58)	Brass CW617N (OT58)
12	Flange	Steel UNI C40	Steel UNI C40
13	Snap ring ø5	Stainless steel AISI316 UNI EN10088	Stainless steel AISI316 UNI EN10088
14	Collar	Fe52.2 GALVANIZED	Fe52.2 GALVANIZED
15	Back rod	Steel 9SMnPb28 UNI EN10087	Steel 9SMnPb28 UNI EN10087
16	Shield	Stainless steel AISI316 UNI EN10088	Stainless steel AISI316 UNI EN10088
Nota: Combinazioni materiali non standard a richiesta Note: Non standard materials combinations on request			

Valvole ad angolo retto PN6 con attuatore idraulico semplice effetto normalmente chiuso (FC)

Angle valves NP6 with hydraulic single acting actuator fail close (FC)

Tab.123G-SR-FC

Conform to:
UNI EN1092

Esecuzione 01
con otturatore Com.

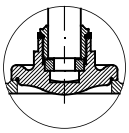

Execution 01
with SDSL disc

Esecuzione 02
con otturatore Aut.

Execution 02
with SDNR disc

con Proximity limit switch (a richiesta)
with Proximity limit switch (on request)

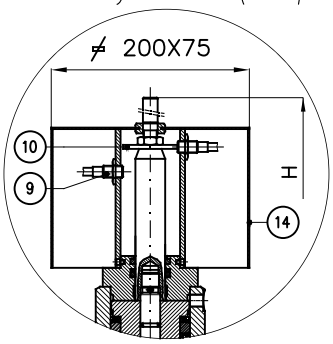

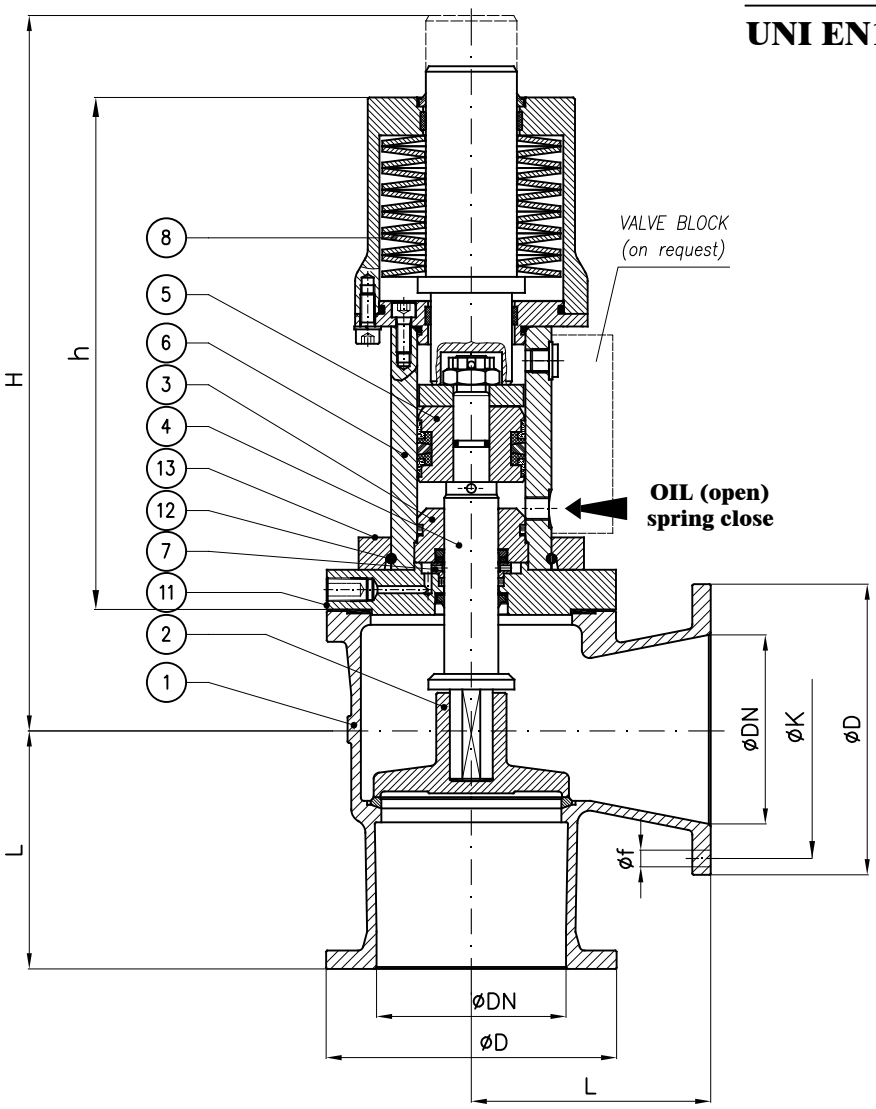

N.B.: Il dimensionamento e quindi anche l'ingombro dell'attuatore è funzione dei seguenti dati che devono sempre essere forniti:

- Pressione esercizio della valvola
- pressione olio all'attuatore
- Servizio

Note.: The size and so the overall dimension of the actuator depends by the following informations that should always be provided:

- *Valve's working pressure*
- *Oil pressure to actuator*
- *Service*

DN	h (~)	H (~)	L	øD	K	f	Holes NO. f	Weight (Kg)
32	305	385	105	120	90	14	4	
40	305	385	95	130	100	14	4	
50	295	385	100	140	110	14	4	
65	285	385	120	160	130	14	4	
80	335	435	130	190	150	18	4	
100	320	435	150	210	170	18	4	
125	420	550	175	240	200	18	8	
150	485	630	200	265	225	18	8	
200	485	675	250	320	280	18	8	
250	565	725	300	375	335	18	12	

Combinazione materiali standard – Standard materials Combination			
		G/316	G/B
ITEM	DENOMINAZIONE DENOMINATION	MATERIALE MATERIAL	MATERIALE MATERIAL
01	Body	Cast iron UNI EN1561 EN-GJL-250	Cast iron UNI EN1561 EN-GJL-250
02	Disc (≤ DN80)	Stainless steel AISI316 UNI EN10088	Bronze UNI EN1982 G-CuSn5Zn5Pb5
02	Disc (≥ DN100)	Cast steel GP240-GH UNI EN10213 plus AISI316 facing welding	Bronze UNI EN1982 G-CuSn5Zn5Pb5
03	Inner head flange	Cast iron UNI EN1561 EN-GJL-250	Cast iron UNI EN1561 EN-GJL-250
04	Stem	Stainless steel AISI316 UNI EN10088	Stainless steel AISI316 UNI EN10088
05	Piston	Steel 9SMnPb28 UNI EN10087	Steel 9SMnPb28 UNI EN10087
06	Housing assembly	Fe52.2 GALVANIZED	Fe52.2 GALVANIZED
07	Back rod	Steel 9SMnPb28 UNI EN10087	Steel 9SMnPb28 UNI EN10087
08	Disk spring	Steel UNI EN10270	Steel UNI EN10270
09	Proximity switch	CEED BG12/2PF2 PNP CEOM E2FX2E2G NPN	CEED BG12/2PF2 PNP CEOM E2FX2E2G NPN
10	Indicator washer	Steel 9SMnPb28 UNI EN10087	Steel 9SMnPb28 UNI EN10087
11	Flange	Steel UNI C40	Steel UNI C40
12	Snap ring ø5	Stainless steel AISI316 UNI EN10088	Stainless steel AISI316 UNI EN10088
13	Collar	Fe52.2 GALVANIZED	Fe52.2 GALVANIZED
14	Shield	Stainless steel AISI316 UNI EN10088	Stainless steel AISI316 UNI EN10088

Nota: Combinazioni materiali non standard a richiesta
Note: Non standard materials combinations on request

Valvole ad angolo retto PN6 con attuatore idraulico semplice effetto normalmente aperto (FO)

Angle valves NP6 with hydraulic single acting actuator fail open (FO)

Tab.123G-SR-FO

Conform to:
UNI EN1092

Esecuzione 01
con otturatore Com.

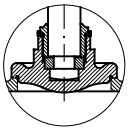

Execution 01
with SDSL disc

Esecuzione 02
con otturatore Aut.

Execution 02
with SDNR disc

con Proximity limit switch (a richiesta)
with Proximity limit switch (on request)

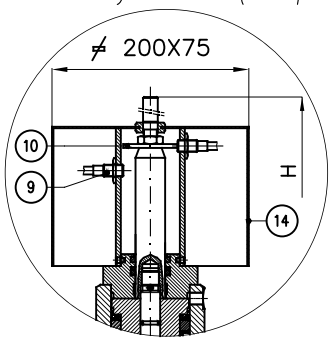

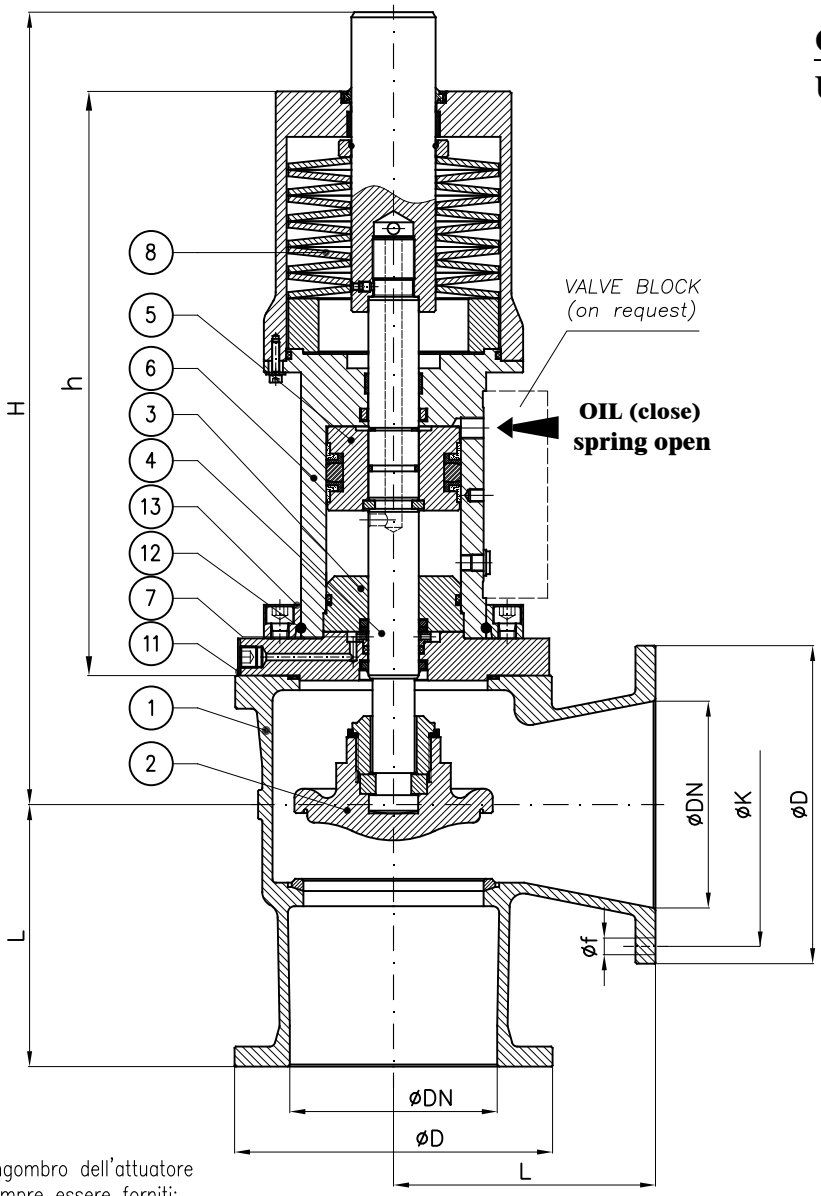

N.B.: Il dimensionamento e quindi anche l'ingombro dell'attuatore è funzione dei seguenti dati che devono sempre essere forniti:

- Pressione esercizio della valvola
- pressione olio all'attuatore
- Servizio

Note.: The size and so the overall dimension of the actuator depends by the following informations that should always be provided:

- *Valve's working pressure*
- *Oil pressure to actuator*
- *Service*

DN	h (~)	H (~)	L	øD	K	f	Holes NO. f	Weight (Kg)
32	305	385	105	120	90	14	4	
40	305	385	95	130	100	14	4	
50	295	385	100	140	110	14	4	
65	285	385	120	160	130	14	4	
80	335	435	130	190	150	18	4	
100	320	435	150	210	170	18	4	
125	420	550	175	240	200	18	8	
150	485	630	200	265	225	18	8	
200	485	675	250	320	280	18	8	
250	565	725	300	375	335	18	12	

Combinazione materiali standard – Standard materials Combination			
		G/316	G/B
ITEM	DENOMINAZIONE DENOMINATION	MATERIALE MATERIAL	MATERIALE MATERIAL
01	Body	Cast iron UNI EN1561 EN-GJL-250	Cast iron UNI EN1561 EN-GJL-250
02	Disc (≤ DN80)	Stainless steel AISI316 UNI EN10088	Bronze UNI EN1982 G-CuSn5Zn5Pb5
02	Disc (≥ DN100)	Cast steel GP240-GH UNI EN10213 plus AISI316 facing welding	Bronze UNI EN1982 G-CuSn5Zn5Pb5
03	Inner head flange	Cast iron UNI EN1561 EN-GJL-250	Cast iron UNI EN1561 EN-GJL-250
04	Stem	Stainless steel AISI316 UNI EN10088	Stainless steel AISI316 UNI EN10088
05	Piston	Steel 9SMnPb28 UNI EN10087	Steel 9SMnPb28 UNI EN10087
06	Housing assembly	Fe52.2 GALVANIZED	Fe52.2 GALVANIZED
07	Back rod	Steel 9SMnPb28 UNI EN10087	Steel 9SMnPb28 UNI EN10087
08	Disk spring	Steel UNI EN10270	Steel UNI EN10270
09	Proximity switch	CEED BG12/2PF2 PNP CEOM E2FX2E2G NPN	CEED BG12/2PF2 PNP CEOM E2FX2E2G NPN
10	Indicator washer	Steel 9SMnPb28 UNI EN10087	Steel 9SMnPb28 UNI EN10087
11	Flange	Steel UNI C40	Steel UNI C40
12	Snap ring ø5	Stainless steel AISI316 UNI EN10088	Stainless steel AISI316 UNI EN10088
13	Collar	Fe52.2 GALVANIZED	Fe52.2 GALVANIZED
14	Shield	Stainless steel AISI316 UNI EN10088	Stainless steel AISI316 UNI EN10088

Nota: Combinazioni materiali non standard a richiesta
Note: Non standard materials combinations on request

Valvole ad angolo retto - serie pesante PN6
Angle valves - heavy class NP6

Tab.123GS

Conform to:
UNI EN1092

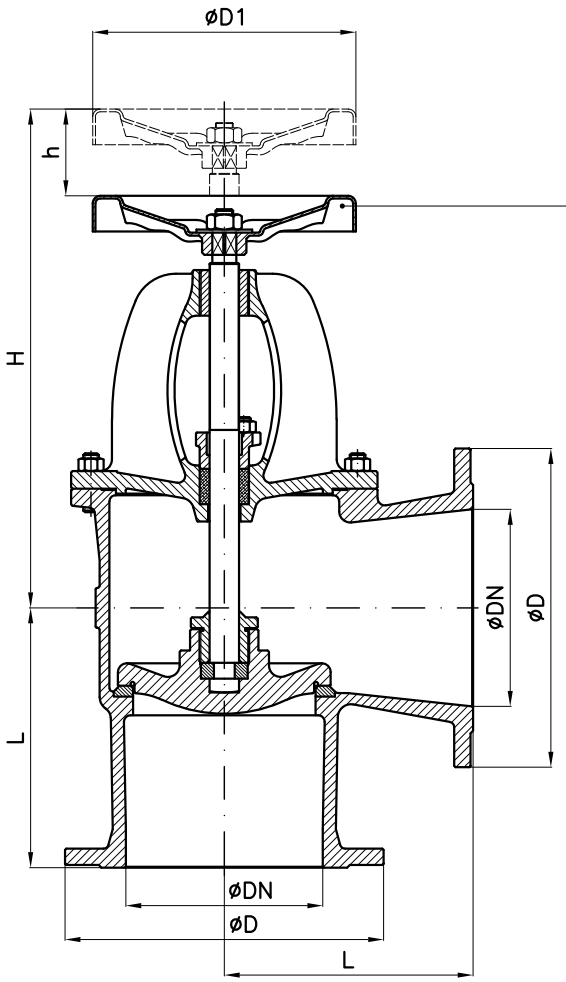

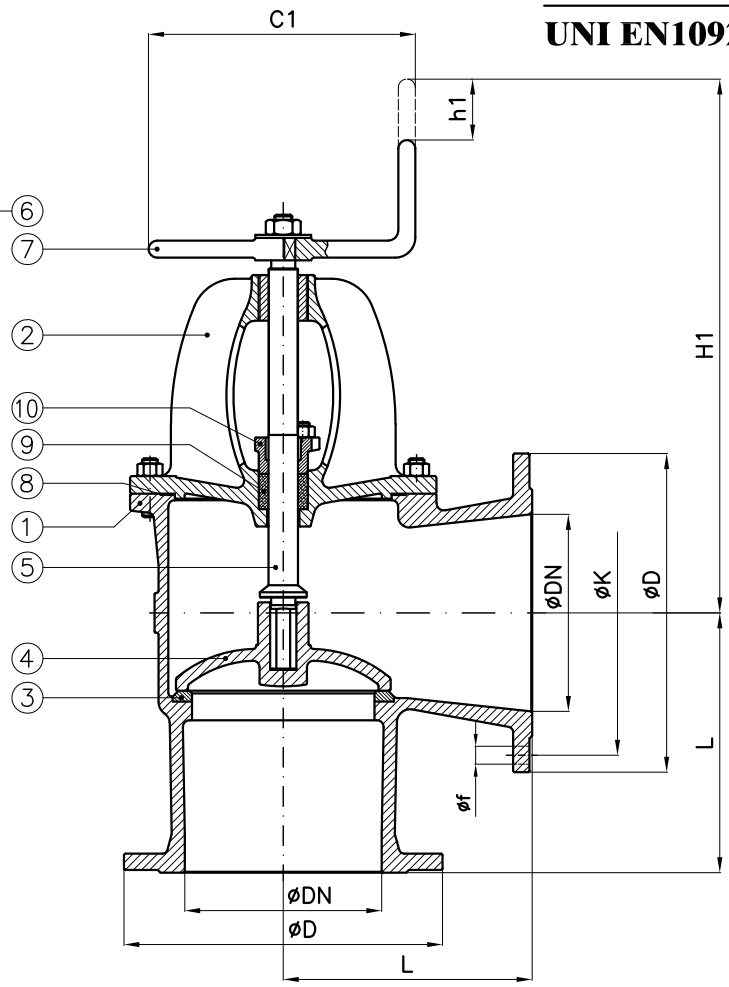

Tab.123.1GS PN6	
comandata (SDSL) with fixed disc (SDSL)	UNI 3419 UNAV 8415

Tab.123.2GS PN6	
semiautomatica (SDNR) with loose disc (SDNR)	UNI 3423 UNAV 8423

DN	C1	D1	H SDSL (~)	h SDSL	H1 SDNR (~)	h1 SDNR	L	D	K	f	Holes NO. f	Weight (Kg)
40	125	125	230	20	255	12	95	130	100	14	4	10
50	125	125	230	24	255	14	100	140	110	14	4	11
65	175	175	290	32	310	18	120	160	130	14	4	17
80	175	175	300	35	325	20	130	190	150	18	4	22
100	200	200	345	45	345	28	150	210	170	18	4	30
125	225	225	380	54	390	32	175	240	200	18	8	47
150	225	300	405	62	420	38	200	265	225	18	8	61
175	250	400	470	74	490	45	230	295	255	18	8	81
200	250	400	500	82	510	50	250	320	280	18	8	95
250	300	500	585	100	570	66	300	375	335	18	12	151
300	425	575	680	118	680	85	350	440	395	22	12	228
350	500		805	130	845	90	400	490	445	22	12	355
400	575		910	135	915	100	450	540	495	22	16	400
450	650		950	160	1000	115	500	595	550	22	16	538
500				180		130	520	645	600	22	20	
600				215		160	550	755	705	26	20	

Combinazione materiali standard – Standard materials Combination			
		GS/316	GS/B
ITEM	DENOMINAZIONE DENOMINATION	MATERIALE MATERIAL	MATERIALE MATERIAL
01	Body	Nodular cast iron EN-GJS-400-15U UNI EN1563	Nodular cast iron EN-GJS-400-15U UNI EN1563
02	Bonnet	Nodular cast iron EN-GJS-400-15U UNI EN1563	Nodular cast iron EN-GJS-400-15U UNI EN1563
03	Body seat	Stainless steel AISI316 UNI EN10088	Stainless steel AISI316 UNI EN10088
04	Disc (≤ DN80)	Stainless steel AISI316 UNI EN10088	Bronze UNI EN1982 G-CuSn5Zn5Pb5
04	Disc (≥ DN100)	Cast steel GP240-GH UNI EN10213 plus AISI316 facing welding	Bronze UNI EN1982 G-CuSn5Zn5Pb5
05	Stem	Stainless steel AISI316 UNI EN10088	Brass CW617N (OT58)
06	Handwheel	Sheet of carbon steel	Sheet of carbon steel
07	Handle	Steel A37 UNI EN10217-1	Steel A37 UNI EN10217-1
08	Gasket	Planiflex KG carbo/C PF81	Planiflex KG carbo/C PF81
09	Packing	Carbograph GR8800	Carbograph GR8800
10	Gland bushing	Bronze UNI EN1982 G-CuSn5Zn5Pb5	Bronze UNI EN1982 G-CuSn5Zn5Pb5

Nota: Combinazioni materiali non standard a richiesta
Note: Non standard materials combinations on request

Valvole ad angolo retto PN6 con attuatore idraulico doppio effetto
Angle valves NP6 with hydraulic double acting actuator

Tab.123GS-DA

(Ex Tab. 129/1-DA)

Conform to:
UNI EN1092

Esecuzione 01
con otturatore Com.

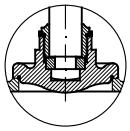

Execution 01
with SDSL disc

Esecuzione 02
con otturatore Aut.

Execution 02
with SDNR disc

con Proximity limit switch (a richiesta)
with Proximity limit switch (on request)

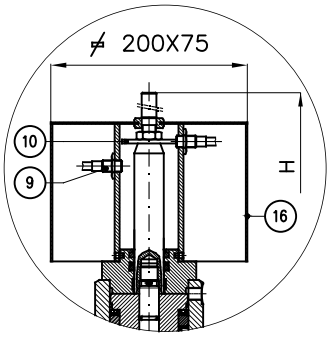

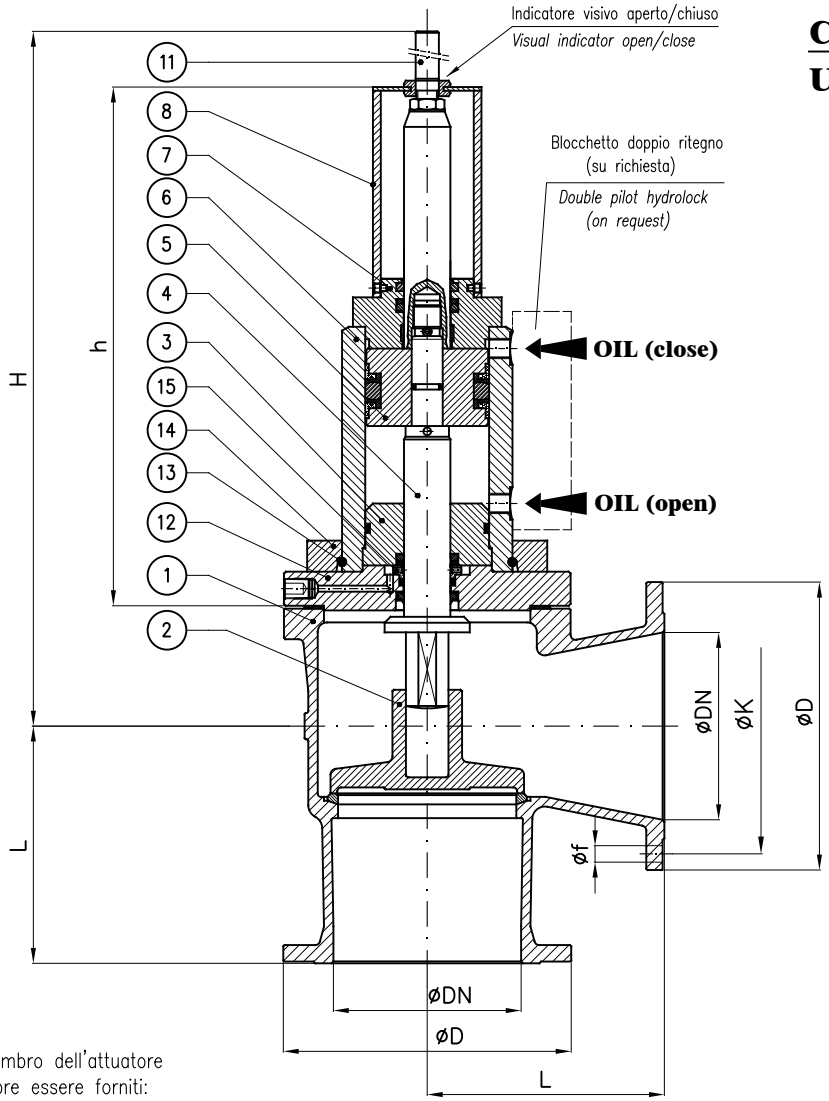

N.B.: Il dimensionamento e quindi anche l'ingombro dell'attuatore è funzione dei seguenti dati che devono sempre essere forniti:

- Pressione esercizio della valvola
- pressione olio all'attuatore
- Servizio

Note.: The size and so the overall dimension of the actuator depends by the following informations that should always be provided:

- *Valve's working pressure*
- *Oil pressure to actuator*
- *Service*

DN	h (~)	H (~)	L	øD	K	f	Holes NO. f	Weight (Kg)
20	210	265	85	90	65	11	4	
25	210	270	90	100	75	11	4	
32	335	415	105	120	90	14	4	
40	335	420	95	130	100	14	4	
50	320	420	100	140	110	14	4	
65	315	420	120	160	130	14	4	
80	340	445	130	190	150	18	4	
100	340	455	150	210	170	18	4	
125	360	495	175	240	200	18	8	
150	360	505	200	265	225	18	8	
200	440	655	250	320	280	18	8	
250	440	660	300	375	335	18	12	
300	525	850	350	440	395	22	12	

Combinazione materiali standard – Standard materials Combination

ITEM	DENOMINAZIONE DENOMINATION	GS/316 MATERIALE MATERIAL	GS/B MATERIALE MATERIAL
01	Body	Nodular cast iron EN-GJS-400-15U UNI EN1563	Nodular cast iron EN-GJS-400-15U UNI EN1563
02	Disc (≤ DN80)	Stainless steel AISI316 UNI EN10088	Bronze UNI EN1982 G-CuSn5Zn5Pb5
02	Disc (≥ DN100)	Cast steel GP240-GH UNI EN10213 plus AISI316 facing welding	Bronze UNI EN1982 G-CuSn5Zn5Pb5
03	Inner head flange	Cast iron UNI EN1561 EN-GJL-250	Cast iron UNI EN1561 EN-GJL-250
04	Stem	Stainless steel AISI316 UNI EN10088	Stainless steel AISI316 UNI EN10088
05	Piston	Steel 9SMnPb28 UNI EN10087	Steel 9SMnPb28 UNI EN10087
06	Housing welded assembly	Fe52.2 GALVANIZED	Fe52.2 GALVANIZED
07	Head flange	Steel UNI C40	Steel UNI C40
08	Proximity switch support	Fe37 GALVANIZED	Fe37 GALVANIZED
09	Proximity switch	CEED BG12/2PF2 PNP CEOM E2FX2E2G NPN	CEED BG12/2PF2 PNP CEOM E2FX2E2G NPN
10	Indicator washer	Steel 9SMnPb28 UNI EN10087	Steel 9SMnPb28 UNI EN10087
11	Index open/close	Brass CW617N (OT58)	Brass CW617N (OT58)
12	Flange	Steel UNI C40	Steel UNI C40
13	Snap ring ø5	Stainless steel AISI316 UNI EN10088	Stainless steel AISI316 UNI EN10088
14	Collar	Fe52.2 GALVANIZED	Fe52.2 GALVANIZED
15	Back rod	Steel 9SMnPb28 UNI EN10087	Steel 9SMnPb28 UNI EN10087
16	Shield	Stainless steel AISI316 UNI EN10088	Stainless steel AISI316 UNI EN10088

Nota: Combinazioni materiali non standard a richiesta
Note: Non standard materials combinations on request

Valvole ad angolo retto PN6 con attuatore idraulico semplice effetto normalmente chiuso (FC)

Angle valves NP6 with hydraulic single acting actuator fail close (FC)

Tab.123GS-SR-FC

(Ex Tab. 129/1-SR-FC)

Conform to:
UNI EN1092

Esecuzione 01
con otturatore Com.

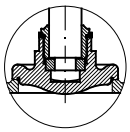

Execution 01
with SDSL disc

Esecuzione 02
con otturatore Aut.

Execution 02
with SDNR disc

con Proximity limit switch (a richiesta)
with Proximity limit switch (on request)

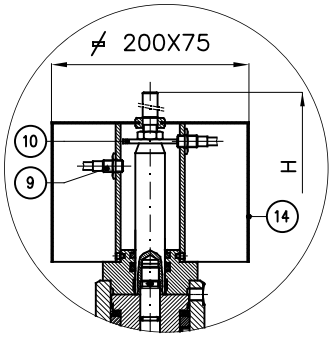

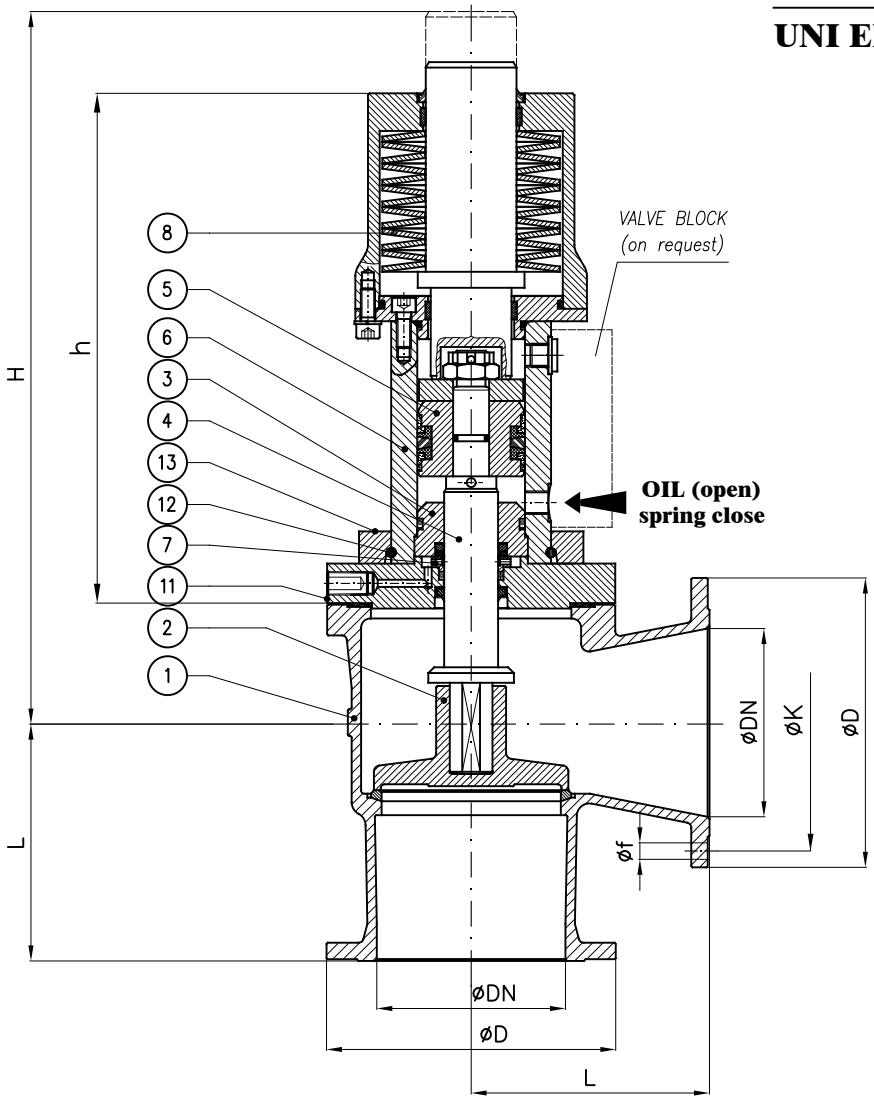

N.B.: Il dimensionamento e quindi anche l'ingombro dell'attuatore è funzione dei seguenti dati che devono sempre essere forniti:

- Pressione esercizio della valvola
- pressione olio all'attuatore
- Servizio

Note.: The size and so the overall dimension of the actuator depends by the following informations that should always be provided:

- *Valve's working pressure*
- *Oil pressure to actuator*
- *Service*

DN	h (~)	H (~)	L	øD	K	f	Holes NO. f	Weight (Kg)
32	305	385	105	120	90	14	4	
40	305	385	95	130	100	14	4	
50	295	385	100	140	110	14	4	
65	285	385	120	160	130	14	4	
80	335	435	130	190	150	18	4	
100	320	435	150	210	170	18	4	
125	420	550	175	240	200	18	8	
150	485	630	200	265	225	18	8	
200	485	675	250	320	280	18	8	
250	565	725	300	375	335	18	12	

Combinazione materiali standard – Standard materials Combination			
		GS/316	GS/B
ITEM	DENOMINAZIONE DENOMINATION	MATERIALE MATERIAL	MATERIALE MATERIAL
01	Body	Nodular cast iron EN-GJS-400-15U UNI EN1563	Nodular cast iron EN-GJS-400-15U UNI EN1563
02	Disc (≤ DN80)	Stainless steel AISI316 UNI EN10088	Bronze UNI EN1982 G-CuSn5Zn5Pb5
02	Disc (≥ DN100)	Cast steel GP240-GH UNI EN10213 plus AISI316 facing welding	Bronze UNI EN1982 G-CuSn5Zn5Pb5
03	Inner head flange	Cast iron UNI EN1561 EN-GJL-250	Cast iron UNI EN1561 EN-GJL-250
04	Stem	Stainless steel AISI316 UNI EN10088	Stainless steel AISI316 UNI EN10088
05	Piston	Steel 9SMnPb28 UNI EN10087	Steel 9SMnPb28 UNI EN10087
06	Housing assembly	Fe52.2 GALVANIZED	Fe52.2 GALVANIZED
07	Back rod	Steel 9SMnPb28 UNI EN10087	Steel 9SMnPb28 UNI EN10087
08	Disk spring	Steel UNI EN10270	Steel UNI EN10270
09	Proximity switch	CEED BG12/2PF2 PNP CEOM E2FX2E2G NPN	CEED BG12/2PF2 PNP CEOM E2FX2E2G NPN
10	Indicator washer	Steel 9SMnPb28 UNI EN10087	Steel 9SMnPb28 UNI EN10087
11	Flange	Steel UNI C40	Steel UNI C40
12	Snap ring ø5	Stainless steel AISI316 UNI EN10088	Stainless steel AISI316 UNI EN10088
13	Collar	Fe52.2 GALVANIZED	Fe52.2 GALVANIZED
14	Shield	Stainless steel AISI316 UNI EN10088	Stainless steel AISI316 UNI EN10088

Nota: Combinazioni materiali non standard a richiesta
Note: Non standard materials combinations on request

Valvole ad angolo retto PN6 con attuatore idraulico semplice effetto normalmente aperto (FO)

Angle valves NP6 with hydraulic single acting actuator fail open (FO)

Tab.123GS-SR-FO

(Ex Tab. 129/1-SR-FO)

Conform to:
UNI EN1092

Esecuzione 01
con otturatore Com.

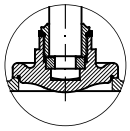

Execution 01
with SDSL disc

Esecuzione 02
con otturatore Aut.

Execution 02
with SDNR disc

con Proximity limit switch (a richiesta)
with Proximity limit switch (on request)

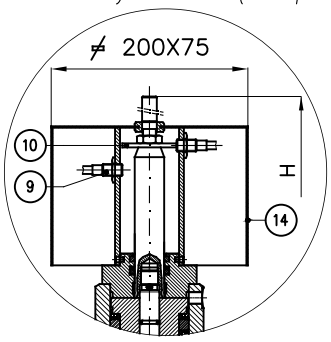

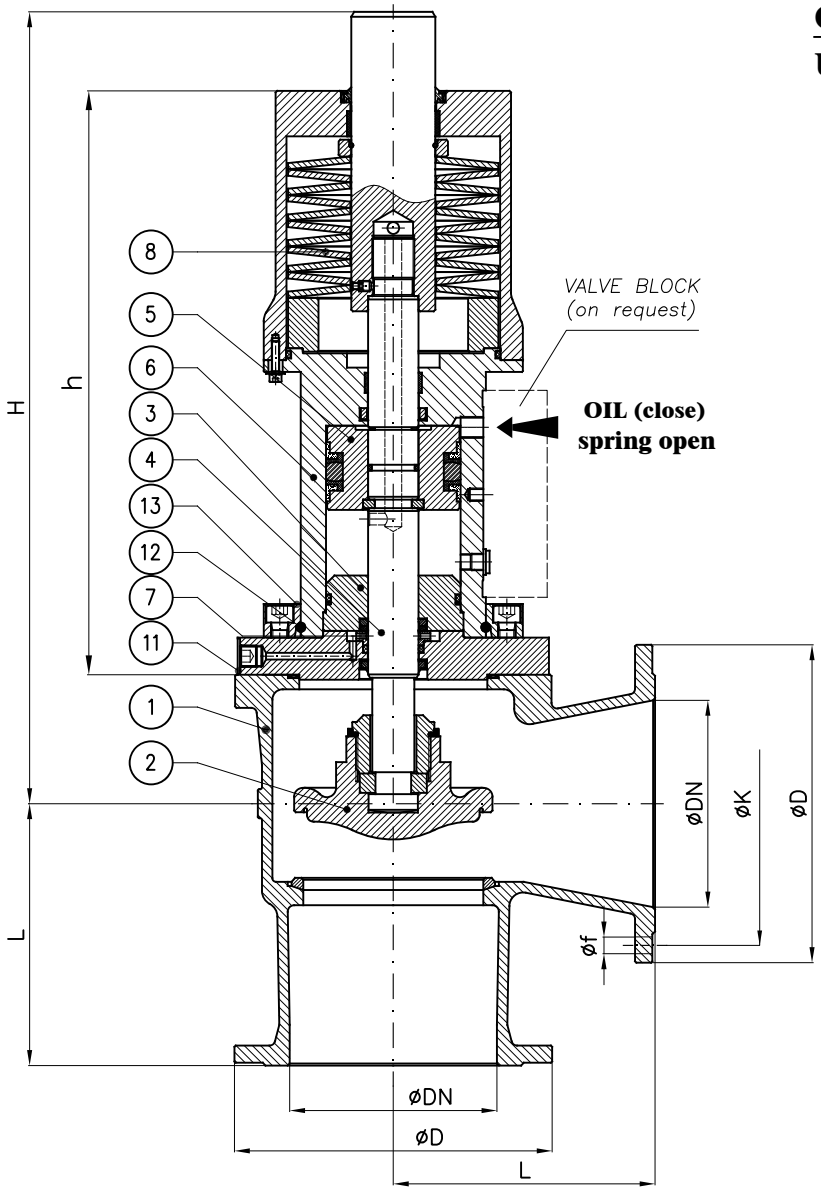

N.B.: Il dimensionamento e quindi anche l'ingombro dell'attuatore è funzione dei seguenti dati che devono sempre essere forniti:

- Pressione esercizio della valvola
- pressione olio all'attuatore
- Servizio

Note.: The size and so the overall dimension of the actuator depends by the following informations that should always be provided:

- *Valve's working pressure*
- *Oil pressure to actuator*
- *Service*

DN	h (~)	H (~)	L	øD	K	f	Holes NO. f	Weight (Kg)
32	305	385	105	120	90	14	4	
40	305	385	95	130	100	14	4	
50	295	385	100	140	110	14	4	
65	285	385	120	160	130	14	4	
80	335	435	130	190	150	18	4	
100	320	435	150	210	170	18	4	
125	420	550	175	240	200	18	8	
150	485	630	200	265	225	18	8	
200	485	675	250	320	280	18	8	
250	565	725	300	375	335	18	12	

Combinazione materiali standard – Standard materials Combination

ITEM	DENOMINAZIONE DENOMINATION	GS/316 MATERIALE MATERIAL	GS/B MATERIALE MATERIAL
01	Body	Nodular cast iron EN-GJS-400-15U UNI EN1563	Nodular cast iron EN-GJS-400-15U UNI EN1563
02	Disc (≤ DN80)	Stainless steel AISI316 UNI EN10088	Bronze UNI EN1982 G-CuSn5Zn5Pb5
02	Disc (≥ DN100)	Cast steel GP240-GH UNI EN10213 plus AISI316 facing welding	Bronze UNI EN1982 G-CuSn5Zn5Pb5
03	Inner head flange	Cast iron UNI EN1561 EN-GJL-250	Cast iron UNI EN1561 EN-GJL-250
04	Stem	Stainless steel AISI316 UNI EN10088	Stainless steel AISI316 UNI EN10088
05	Piston	Steel 9SMnPb28 UNI EN10087	Steel 9SMnPb28 UNI EN10087
06	Housing assembly	Fe52.2 GALVANIZED	Fe52.2 GALVANIZED
07	Back rod	Steel 9SMnPb28 UNI EN10087	Steel 9SMnPb28 UNI EN10087
08	Disk spring	Steel UNI EN10270	Steel UNI EN10270
09	Proximity switch	CEED BG12/2PF2 PNP CEOM E2FX2E2G NPN	CEED BG12/2PF2 PNP CEOM E2FX2E2G NPN
10	Indicator washer	Steel 9SMnPb28 UNI EN10087	Steel 9SMnPb28 UNI EN10087
11	Flange	Steel UNI C40	Steel UNI C40
12	Snap ring ø5	Stainless steel AISI316 UNI EN10088	Stainless steel AISI316 UNI EN10088
13	Collar	Fe52.2 GALVANIZED	Fe52.2 GALVANIZED
14	Shield	Stainless steel AISI316 UNI EN10088	Stainless steel AISI316 UNI EN10088

Nota: Combinazioni materiali non standard a richiesta
Note: Non standard materials combinations on request

Valvole ad angolo retto - serie pesante PN16-10DIN
Angle valves - heavy class NP16-10DIN

Tab.125A

Conform to:
UNI EN1092
DIN 3202

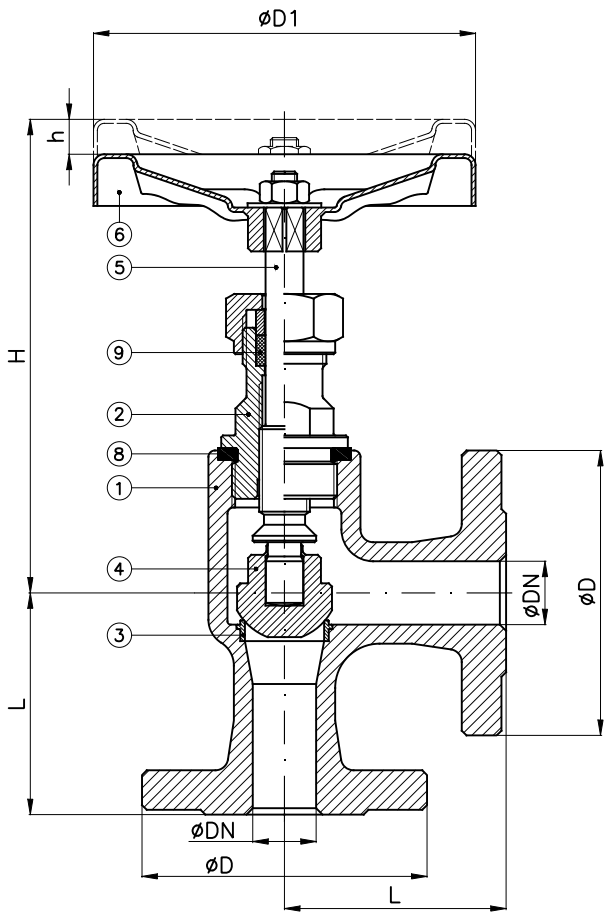

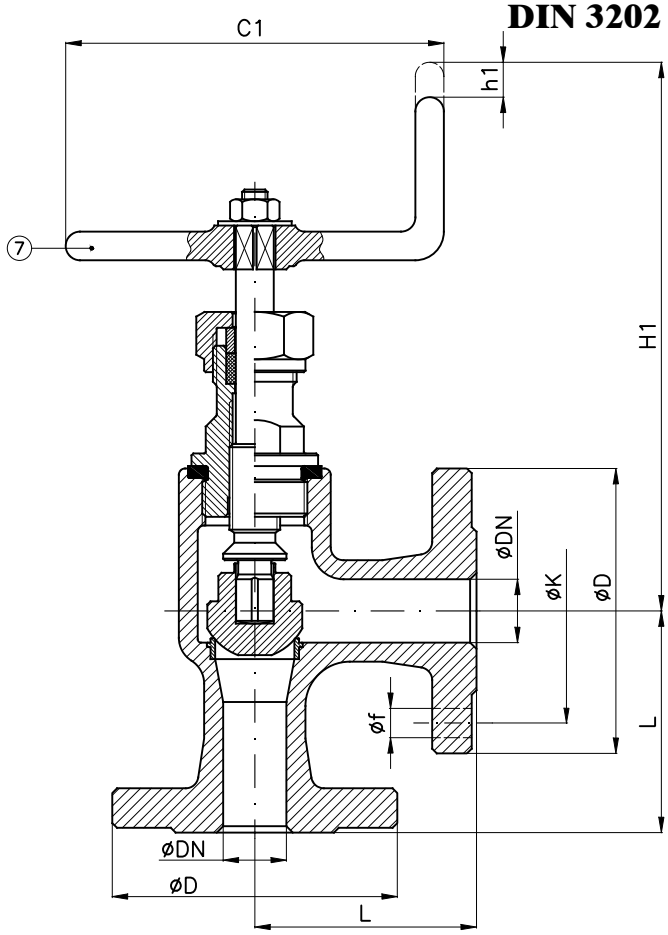

Tab.125.1A PN16-10DIN	
comandata (SDSL) with fixed disc (SDSL)	UNI 3418 UNAV 8441

Tab.125.2A PN16-10DIN	
semiautomatica (SDNR) with loose disc (SDNR)	UNI 3422 UNAV 8443

DN	C1	D1	H SDSL (~)	h SDSL	H1 SDNR (~)	h1 SDNR	L	D	K	f	Holes NO. f	Weight (Kg)
15	100	100	155	10	185	10	85	95	65	14	4	1.7
20	100	100	155	10	185	10	85	105	75	14	4	2
25	100	100	155	10	185	10	90	115	85	14	4	3
32	125	125	180	13	215	13	105	140	100	18	4	4

Combinazione materiali standard – Standard materials Combination

		A/316	A/B	CF8M/316
ITEM	DENOMINAZIONE DENOMINATION	MATERIALE MATERIAL	MATERIALE MATERIAL	MATERIALE MATERIAL
01	Body	Cast steel GP240-GH UNI EN10213	Cast steel GP240-GH UNI EN10213	Stainless steel CF8M ASTM A351
02	Bonnet	Carbon steel GE240 UNI EN10293	Carbon steel GE240 UNI EN10293	Stainless steel AISI316 UNI EN10088
03	Body seat	Stainless steel AISI316 UNI EN10088	Stainless steel AISI316 UNI EN10088	Stainless steel AISI316 UNI EN10088
04	Disc	Stainless steel AISI316 UNI EN10088	Bronze UNI EN1982 G-CuSn5Zn5Pb5	Stainless steel AISI316 UNI EN10088
05	Stem	Stainless steel AISI316 UNI EN10088	Brass CW617N (OT58)	Stainless steel AISI316 UNI EN10088
06	Handwheel	Sheet of carbon steel	Sheet of carbon steel	Sheet of carbon steel
07	Handle	Steel A37 UNI EN10217-1	Steel A37 UNI EN10217-1	Steel A37 UNI EN10217-1
08	Gasket	Planiflex KG carbo/C PF81	Planiflex KG carbo/C PF81	Planiflex KG carbo/C PF81
09	Packing	Carbograph GR8800	Carbograph GR8800	Carbograph GR8800

Nota: Combinazioni materiali non standard a richiesta
Note: Non standard materials combinations on request

Valvole ad angolo retto - serie pesante PN16-10DIN
Angle valves - heavy class NP16-10DIN

Tab.125B

Conform to:
UNI EN1092
DIN 3202

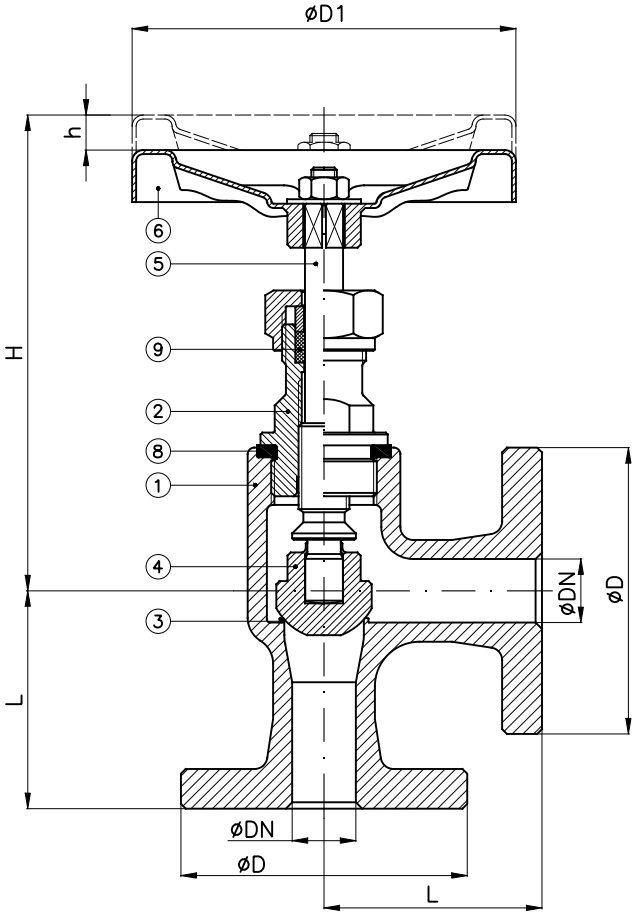

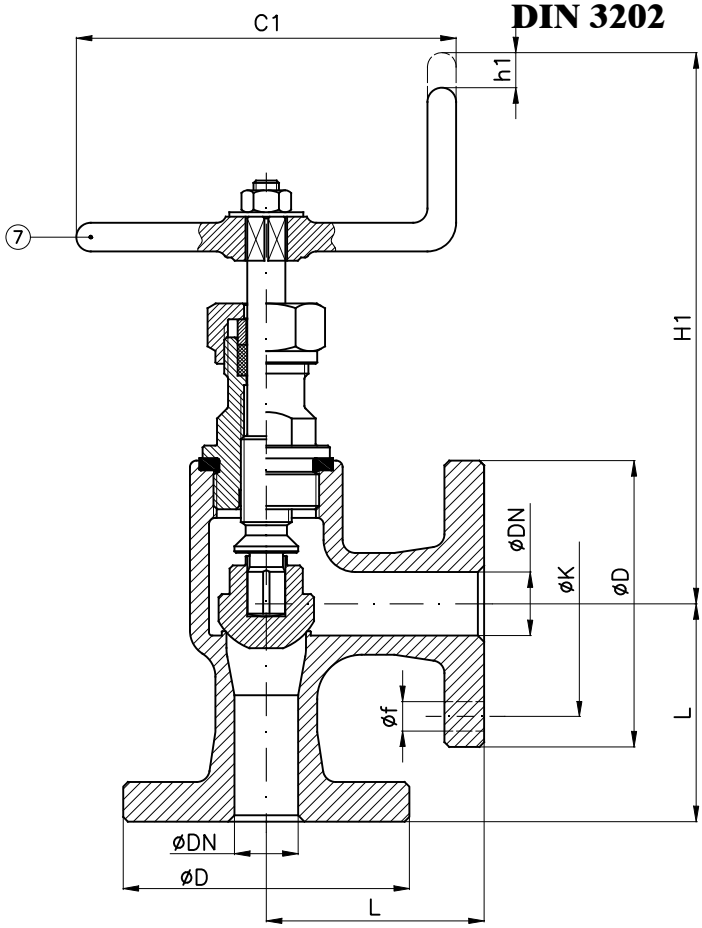

Tab.125.1B PN16-10DIN	
comandata (SDSL) with fixed disc (SDSL)	UNI 3418 UNAV 8441

Tab.125.2B PN16-10DIN	
semiautomatica (SDNR) with loose disc (SDNR)	UNI 3422 UNAV 8443

DN	C1	D1	H SDSL (~)	h SDSL	H1 SDNR (~)	h1 SDNR	L	D	K	f	Holes NO. f	Weight (Kg)
15	100	100	160	10	190	10	85	95	65	14	4	3.5
20	100	100	160	10	190	10	85	105	75	14	4	4
25	100	100	150	10	180	10	90	115	85	14	4	4
32	125	125	175	13	205	13	105	140	100	18	4	6.5

Combinazione materiali standard – Standard materials Combination			
		B/316	B/B
ITEM	DENOMINAZIONE DENOMINATION	MATERIALE MATERIAL	MATERIALE MATERIAL
01	Body	Bronze UNI EN1982 G-CuSn5Zn5Pb5	Bronze UNI EN1982 G-CuSn5Zn5Pb5
02	Bonnet	Bronze UNI EN1982 G-CuSn5Zn5Pb5	Bronze UNI EN1982 G-CuSn5Zn5Pb5
03	Integral body seat	Bronze UNI EN1982 G-CuSn5Zn5Pb5	Bronze UNI EN1982 G-CuSn5Zn5Pb5
04	Disc	Stainless steel AISI316 UNI EN10088	Bronze UNI EN1982 G-CuSn5Zn5Pb5
05	Stem	Stainless steel AISI316 UNI EN10088	Brass CW617N (OT58)
06	Handwheel	Sheet of carbon steel	Sheet of carbon steel
07	Handle	Steel A37 UNI EN10217-1	Steel A37 UNI EN10217-1
08	Gasket	Planiflex KG carbo/C PF81	Planiflex KG carbo/C PF81
09	Packing	Carbograph GR8800	Carbograph GR8800

Nota: Combinazioni materiali non standard a richiesta
Note: Non standard materials combinations on request

Valvole ad angolo retto - serie pesante PN16-10DIN
Angle valves - heavy class NP16-10DIN

Tab.125G

Conform to:
UNI EN1092
DIN 3202

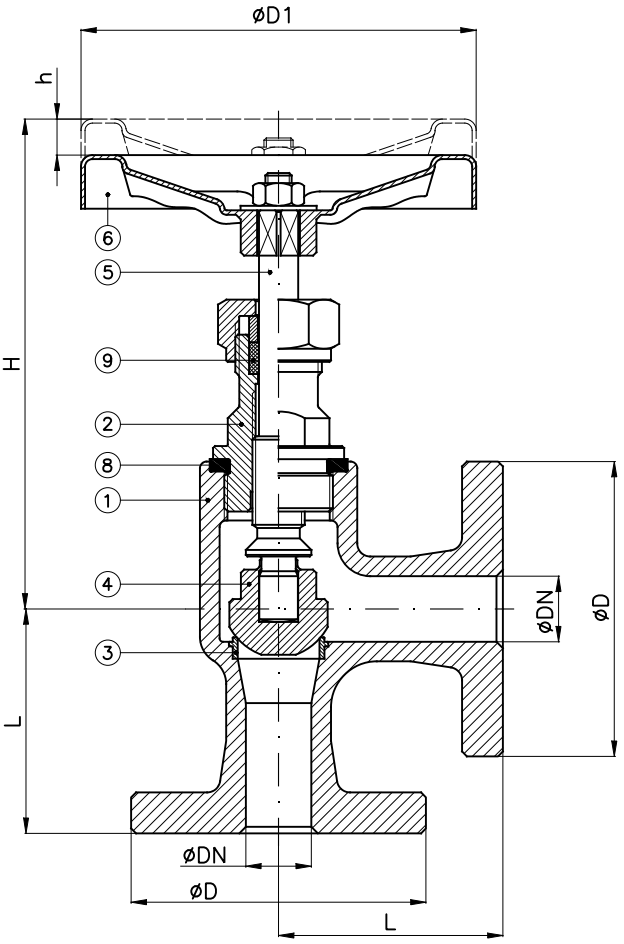

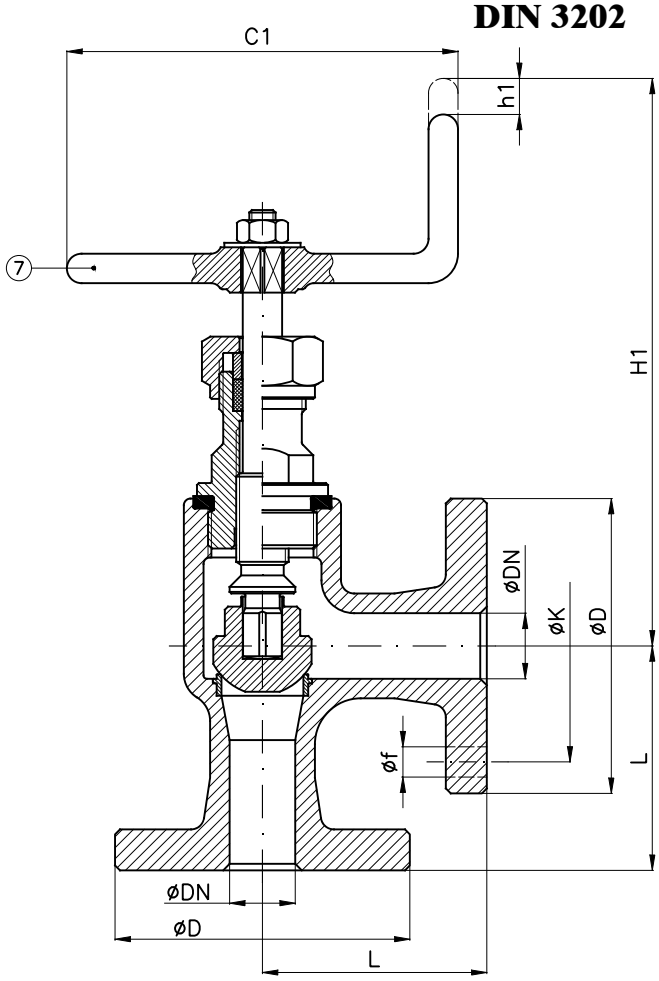

Tab.125.1G PN16-10DIN	
comandata (SDSL) with fixed disc (SDSL)	UNI 3418 UNAV 8441

Tab.125.2G PN16-10DIN	
semiautomatica (SDNR) with loose disc (SDNR)	UNI 3422 UNAV 8443

DN	C1	D1	H SDSL (~)	h SDSL	H1 SDNR (~)	h1 SDNR	L	D	K	f	Holes NO. f	Weight (Kg)
15	100	100	150	10	180	10	85	95	65	14	4	3
20	100	100	150	10	180	10	85	105	75	14	4	3.5
25	100	100	150	10	180	10	90	115	85	14	4	4.5
32	125	125	175	13	205	13	105	140	100	18	4	5

Combinazione materiali standard – Standard materials Combination			
		G/316	G/B
ITEM	DENOMINAZIONE DENOMINATION	MATERIALE MATERIAL	MATERIALE MATERIAL
01	Body	Cast iron UNI EN1561 EN-GJL-250	Cast iron UNI EN1561 EN-GJL-250
02	Bonnet	Carbon steel GE240 UNI EN10293	Carbon steel GE240 UNI EN10293
03	Body seat	Stainless steel AISI316 UNI EN10088	Stainless steel AISI316 UNI EN10088
04	Disc	Stainless steel AISI316 UNI EN10088	Bronze UNI EN1982 G-CuSn5Zn5Pb5
05	Stem	Stainless steel AISI316 UNI EN10088	Brass CW617N (OT58)
06	Handwheel	Sheet of carbon steel	Sheet of carbon steel
07	Handle	Steel A37 UNI EN10217-1	Steel A37 UNI EN10217-1
08	Gasket	Planiflex KG carbo/C PF81	Planiflex KG carbo/C PF81
09	Packing	Carbograph GR8800	Carbograph GR8800
Nota: Combinazioni materiali non standard a richiesta Note: Non standard materials combinations on request			

Valvole ad angolo retto - serie pesante PN16-10DIN
Angle valves - heavy class NP16-10DIN

Tab.125GS

Conform to:
UNI EN1092
DIN 3202

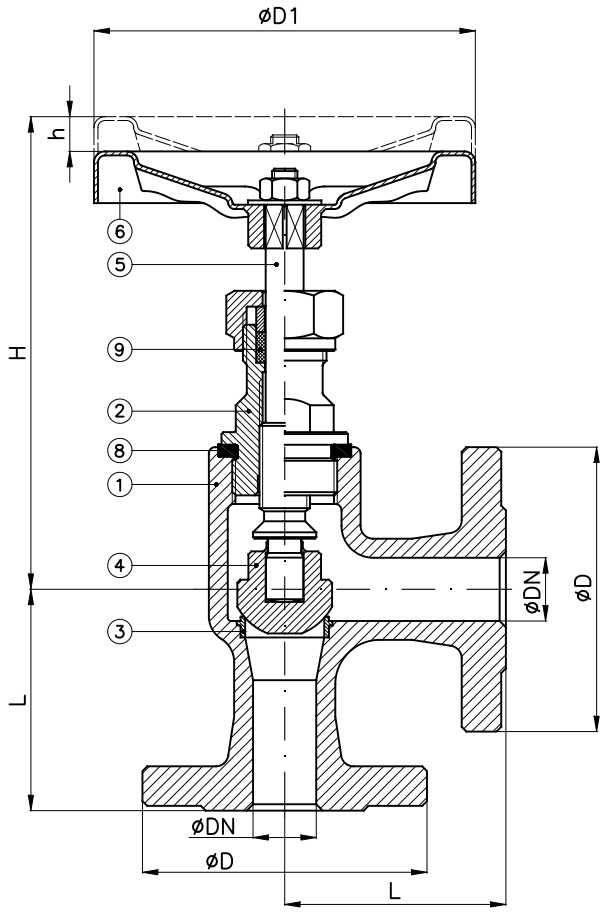

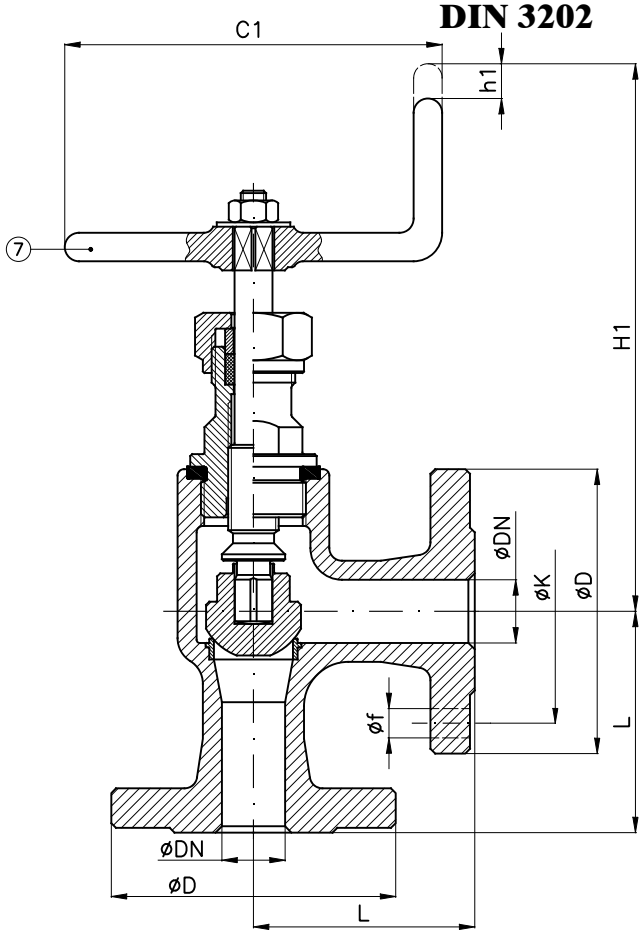

Tab.125.1GS PN16-10DIN	
comandata (SDSL) with fixed disc (SDSL)	UNI 3418 UNAV 8441 NS 402130

Tab.125.2GS PN16-10DIN	
semiautomatica (SDNR) with loose disc (SDNR)	UNI 3422 UNAV 8443 NS 404130

DN	C1	D1	H SDSL (~)	h SDSL	H1 SDNR (~)	h1 SDNR	L	D	K	f	Holes NO. f	Weight (Kg)
15	100	100	150	10	180	10	85	95	65	14	4	3
20	100	100	150	10	180	10	85	105	75	14	4	3.5
25	100	100	150	10	180	10	90	115	85	14	4	4.5
32	125	125	175	13	205	13	105	140	100	18	4	5

Combinazione materiali standard – Standard materials Combination			
		GS/316	GS/B
ITEM	DENOMINAZIONE DENOMINATION	MATERIALE MATERIAL	MATERIALE MATERIAL
01	Body	Nodular cast iron EN-GJS-400-15U UNI EN1563	Nodular cast iron EN-GJS-400-15U UNI EN1563
02	Bonnet	Carbon steel GE240 UNI EN10293	Carbon steel GE240 UNI EN10293
03	Body seat	Stainless steel AISI316 UNI EN10088	Stainless steel AISI316 UNI EN10088
04	Disc	Stainless steel AISI316 UNI EN10088	Bronze UNI EN1982 G-CuSn5Zn5Pb5
05	Stem	Stainless steel AISI316 UNI EN10088	Brass CW617N (OT58)
06	Handwheel	Sheet of carbon steel	Sheet of carbon steel
07	Handle	Steel A37 UNI EN10217-1	Steel A37 UNI EN10217-1
08	Gasket	Planiflex KG carbo/C PF81	Planiflex KG carbo/C PF81
09	Packing	Carbograph GR8800	Carbograph GR8800

Nota: Combinazioni materiali non standard a richiesta
Note: Non standard materials combinations on request

Valvole ad angolo retto - serie pesante PN10DIN-PN16
Angle valves - heavy class NP10DIN-NP16

Tab.127A

Conform to:
UNI EN1092
DIN 3202

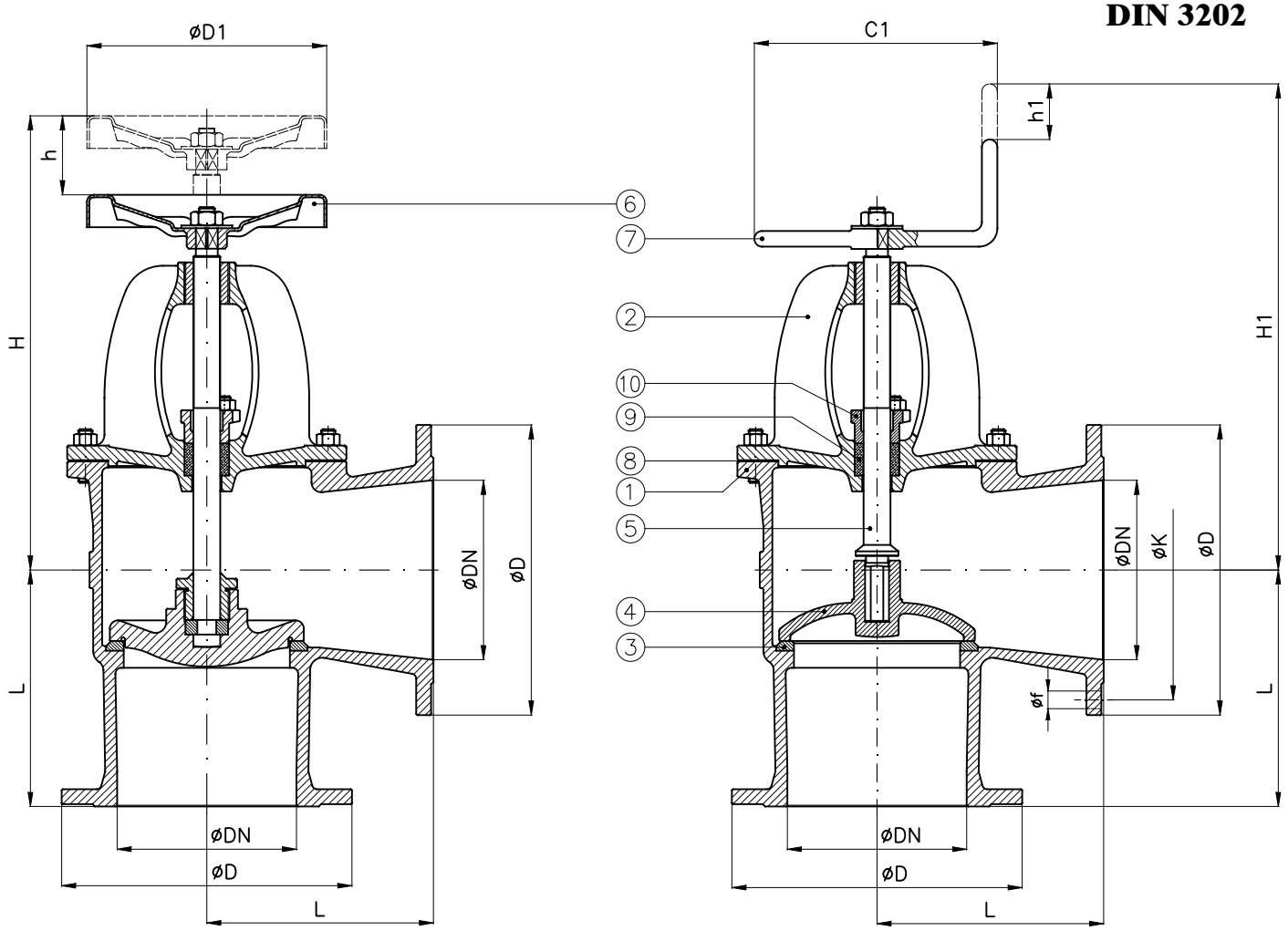

Tab.127A-SDSL TYPE	PN10DIN	PN16
comandata (SDSL) with fixed disc (SDSL)	-	UNAV 9834

Tab.127A-SDNR TYPE	PN10DIN	PN16
semiautomatica (SDNR) with loose disc (SDNR)	-	UNAV 9837

									PN10DIN				PN16			
DN	C1	D1	H SDSL (~)	h SDSL	H1 SDNR (~)	h1 SDNR	L	Weight (Kg)	D	K	f	Holes NO. f	D	K	f	Holes NO. f
15	100	100	195	12	220	8	85	5.5	95	65	14	4	95	65	14	4
20	100	100	195	12	220	8	85	6	105	75	14	4	105	75	14	4
25	100	100	210	14	235	9	90	7	115	85	14	4	115	85	14	4
32	125	125	225	17	250	10	105	10.5	140	100	18	4	140	100	18	4
40	125	125	235	20	255	12	115	11.5	150	110	18	4	150	110	18	4
50	125	125	245	24	265	14	125	13.5	165	125	18	4	165	125	18	4
65	175	175	325	32	340	18	145	26	185	145	18	4	185	145	18	4
80	175	175	335	35	355	20	155	30	200	160	18	8	200	160	18	8
100	200	200	365	45	365	28	175	37	220	180	18	8	220	180	18	8
125	225	225	425	54	430	32	200	60	250	210	18	8	250	210	18	8
150	225	300	475	62	485	38	225	74	285	240	22	8	285	240	22	8
175	250	400	505	74	505	45	250	100	315	270	22	8	315	270	22	8
200	250	400	570	82	600	50	275	128	340	295	22	8	340	295	22	12
250	300	500	645	100	665	66	325	206	395	350	22	12	405	355	26	12
300	425	575	665	118	675	85	375	245	445	400	22	12	460	410	26	12
350	500		720	130	795	90	400	360	505	460	22	16	520	470	26	16
400	575		900	135	915	100	450	417	565	515	26	16	580	525	30	16
450	650		955	160		115	500	540	615	565	26	20	640	585	30	20
500			1120	180	1160	130	535	850	670	620	26	20	715	650	33	20
600				215		160	550	1500	780	725	30	20	840	770	36	20

Combinazione materiali standard – Standard materials Combination				
		A/316	A/B	CF8M/316
ITEM	DENOMINAZIONE DENOMINATION	MATERIALE MATERIAL	MATERIALE MATERIAL	MATERIALE MATERIAL
01	Body	Cast steel GP240-GH UNI EN10213	Cast steel GP240-GH UNI EN10213	Stainless steel CF8M ASTM A351
02	Bonnet	Cast steel GP240-GH UNI EN10213	Cast steel GP240-GH UNI EN10213	Stainless steel CF8M ASTM A351
03	Body seat	Stainless steel AISI316 UNI EN10088	Stainless steel AISI316 UNI EN10088	Stainless steel AISI316 UNI EN10088
04	Disc (≤ DN80)	Stainless steel AISI316 UNI EN10088	Bronze UNI EN1982 G-CuSn5Zn5Pb5	Stainless steel AISI316 UNI EN10088
04	Disc (≥ DN100)	Cast steel GP240-GH UNI EN10213 plus AISI316 facing welding	Bronze UNI EN1982 G-CuSn5Zn5Pb5	Stainless steel CF8M ASTM A351
05	Stem	Stainless steel AISI316 UNI EN10088	Brass CW617N (OT58)	Stainless steel AISI316 UNI EN10088
06	Handwheel	Sheet of carbon steel	Sheet of carbon steel	Sheet of carbon steel
07	Handle	Steel A37 UNI EN10217-1	Steel A37 UNI EN10217-1	Steel A37 UNI EN10217-1
08	Gasket	Planiflex KG carbo/C PF81	Planiflex KG carbo/C PF81	Planiflex KG carbo/C PF81
09	Packing	Carbograph GR8800	Carbograph GR8800	Carbograph GR8800
10	Gland bushing	Steel Fe360B (S235JRC) UNI EN10025	Steel Fe360B (S235JRC) UNI EN10025	Stainless steel AISI316 UNI EN10088

Nota: Combinazioni materiali non standard a richiesta
Note: Non standard materials combinations on request

Valvole ad angolo retto PN10DIN-PN16 con attuatore idraulico doppio effetto

Angle valves NP10DIN-NP16 with hydraulic double acting actuator

Tab.127A-DA

(Ex Tab. 129/1-DA)

Conform to:

UNI EN1092
DIN 3202

Esecuzione 01
con otturatore Com.

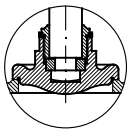

Execution 01
with SDSL disc

Esecuzione 02
con otturatore Aut.

Execution 02
with SDNR disc

con Proximity limit switch (a richiesta)
with Proximity limit switch (on request)

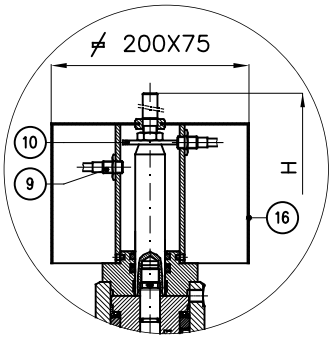

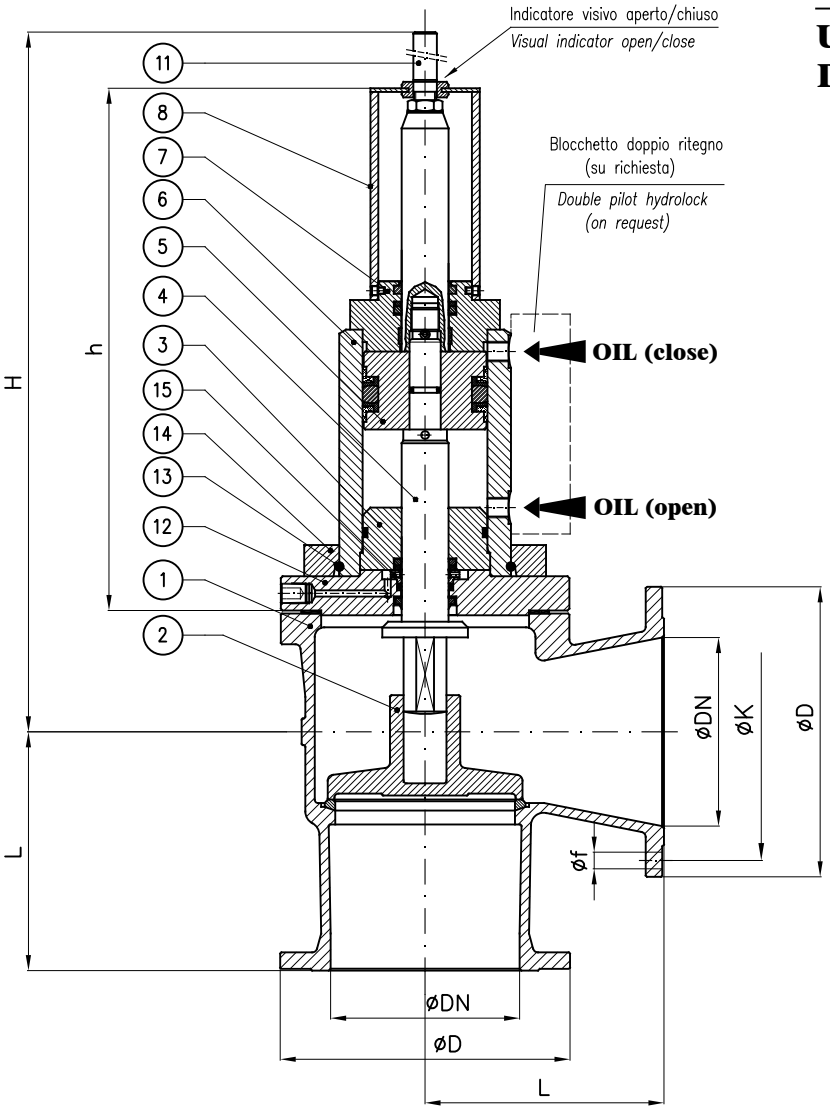

N.B.: Il dimensionamento e quindi anche l'ingombro dell'attuatore è funzione dei seguenti dati che devono sempre essere forniti:

- Pressione esercizio della valvola
- pressione olio all'attuatore
- Servizio

Note.: The size and so the overall dimension of the actuator depends by the following informations that should always be provided:

- *Valve's working pressure*
- *Oil pressure to actuator*
- *Service*

					PN10DIN				PN16			
DN	h (~)	H (~)	L	Weight (Kg)	øD	K	f	Holes NO. f	øD	K	f	Holes NO. f
20	210	265	85		105	75	14	4	105	75	14	4
25	210	270	90		115	85	14	4	115	85	14	4
32	335	415	105		140	100	18	4	140	100	18	4
40	335	420	115		150	110	18	4	150	110	18	4
50	320	420	125		165	125	18	4	165	125	18	4
65	315	420	145		185	145	18	4	185	145	18	4
80	340	445	155		200	160	18	8	200	160	18	8
100	340	455	175		220	180	18	8	220	180	18	8
125	360	495	200		250	210	18	8	250	210	18	8
150	360	505	225		285	240	22	8	285	240	22	8
200	440	655	275		340	295	22	8	340	295	22	12
250	440	660	325		395	350	22	12	405	355	26	12
300	525	850	375		445	400	22	12	460	410	26	12

Combinazione materiali standard – Standard materials Combination

		A/316	A/B	CF8M/316
ITEM	DENOMINAZIONE DENOMINATION	MATERIALE MATERIAL	MATERIALE MATERIAL	MATERIALE MATERIAL
01	Body	Cast steel GP240-GH UNI EN10213	Cast steel GP240-GH UNI EN10213	Stainless steel CF8M ASTM A351
02	Disc (≤ DN80)	Stainless steel AISI316 UNI EN10088	Bronze UNI EN1982 G-CuSn5Zn5Pb5	Stainless steel AISI316 UNI EN10088
02	Disc (≥ DN100)	Cast steel GP240-GH UNI EN10213 plus AISI316 facing welding	Bronze UNI EN1982 G-CuSn5Zn5Pb5	Cast steel GP240-GH UNI EN10213 plus AISI316 facing welding
03	Inner head flange	Cast iron UNI EN1561 EN-GJL-250	Cast iron UNI EN1561 EN-GJL-250	Cast iron UNI EN1561 EN-GJL-250
04	Stem	Stainless steel AISI316 UNI EN10088	Stainless steel AISI316 UNI EN10088	Stainless steel AISI316 UNI EN10088
05	Piston	Steel 9SMnPb28 UNI EN10087	Steel 9SMnPb28 UNI EN10087	Steel 9SMnPb28 UNI EN10087
06	Housing welded assembly	Fe52.2 GALVANIZED	Fe52.2 GALVANIZED	Fe52.2 GALVANIZED
07	Head flange	Steel UNI C40	Steel UNI C40	Steel UNI C40
08	Proximity switch support	Fe37 GALVANIZED	Fe37 GALVANIZED	Fe37 GALVANIZED
09	Proximity switch	CEED BG12/2PF2 PNP CEOM E2FX2E2G NPN	CEED BG12/2PF2 PNP CEOM E2FX2E2G NPN	CEED BG12/2PF2 PNP CEOM E2FX2E2G NPN
10	Indicator washer	Steel 9SMnPb28 UNI EN10087	Steel 9SMnPb28 UNI EN10087	Steel 9SMnPb28 UNI EN10087
11	Index open/close	Brass CW617N (OT58)	Brass CW617N (OT58)	Brass CW617N (OT58)
12	Flange	Steel UNI C40	Steel UNI C40	Steel UNI C40
13	Snap ring ø5	Stainless steel AISI316 UNI EN10088	Stainless steel AISI316 UNI EN10088	Stainless steel AISI316 UNI EN10088
14	Collar	Fe52.2 GALVANIZED	Fe52.2 GALVANIZED	Fe52.2 GALVANIZED
15	Back rod	Steel 9SMnPb28 UNI EN10087	Steel 9SMnPb28 UNI EN10087	Steel 9SMnPb28 UNI EN10087
16	Shield	Stainless steel AISI316 UNI EN10088	Stainless steel AISI316 UNI EN10088	Stainless steel AISI316 UNI EN10088

Nota: Combinazioni materiali non standard a richiesta
Note: Non standard materials combinations on request

Valvole ad angolo retto PN10DIN-PN16 con attuatore idraulico semplice effetto normalmente chiuso (FC)

Angle valves NP10DIN-NP16 with hydraulic single acting actuator fail close (FC)

Tab.127A-SR-FC

(Ex Tab. 129/1-SR-FC)

Conform to:
UNI EN1092
DIN 3202

Esecuzione 01
con otturatore Com.

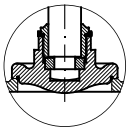

Execution 01
with SDSL disc

Esecuzione 02
con otturatore Aut.

Execution 02
with SDNR disc

con Proximity limit switch (a richiesta)
with Proximity limit switch (on request)

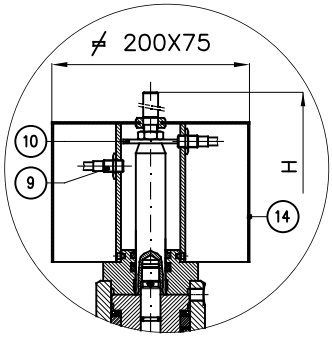

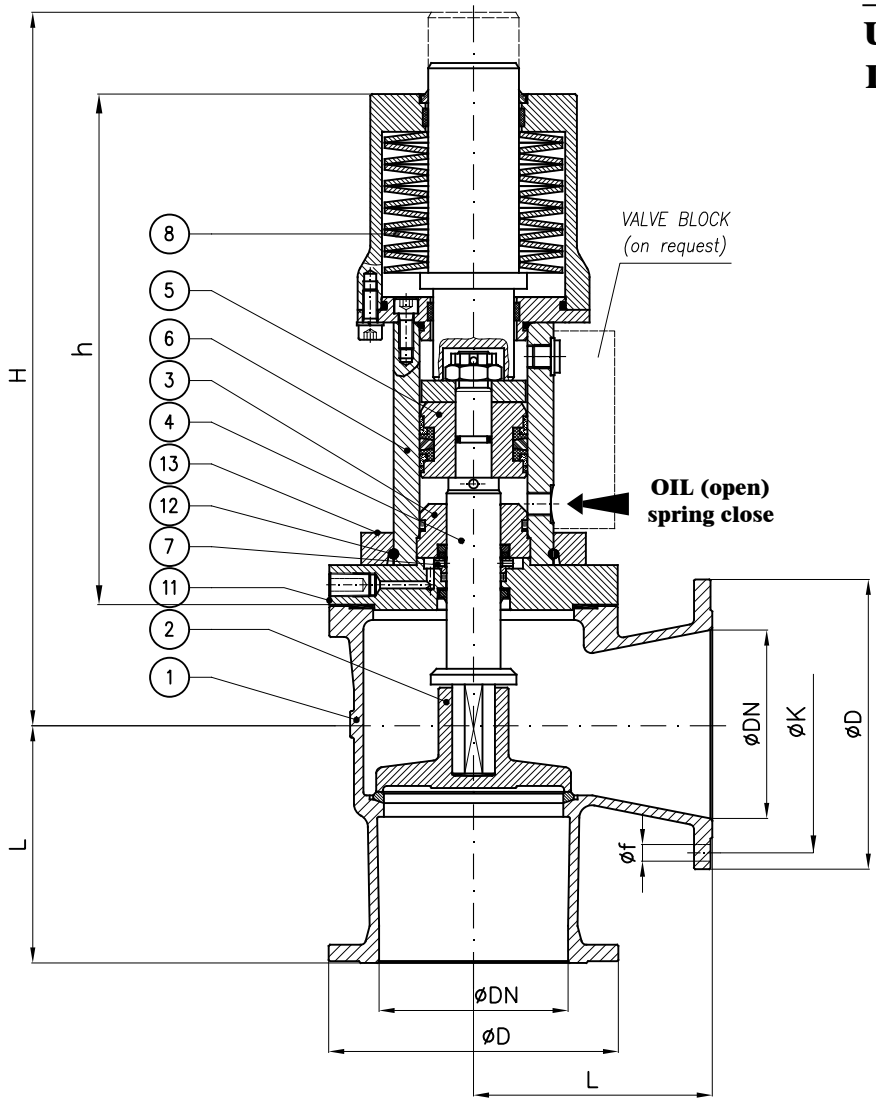

N.B.: Il dimensionamento e quindi anche l'ingombro dell'attuatore è funzione dei seguenti dati che devono sempre essere forniti:

- Pressione esercizio della valvola
- pressione olio all'attuatore
- Servizio

Note.: The size and so the overall dimension of the actuator depends by the following informations that should always be provided:

- *Valve's working pressure*
- *Oil pressure to actuator*
- *Service*

					PN10DIN				PN16			
DN	h (~)	H (~)	L	Weight (Kg)	øD	K	f	Holes NO. f	øD	K	f	Holes NO. f
32	305	385	105		140	100	18	4	140	100	18	4
40	305	385	115		150	110	18	4	150	110	18	4
50	295	385	125		165	125	18	4	165	125	18	4
65	285	385	145		185	145	18	4	185	145	18	4
80	335	435	155		200	160	18	8	200	160	18	8
100	320	435	175		220	180	18	8	220	180	18	8
125	420	550	200		250	210	18	8	250	210	18	8
150	485	630	225		285	240	22	8	285	240	22	8
200	485	675	275		340	295	22	8	340	295	22	12
250	565	725	325		395	350	22	12	405	355	26	12

Combinazione materiali standard – Standard materials Combination				
		A/316	A/B	CF8M/316
ITEM	DENOMINAZIONE DENOMINATION	MATERIALE MATERIAL	MATERIALE MATERIAL	MATERIALE MATERIAL
01	Body	Cast steel GP240-GH UNI EN10213	Cast steel GP240-GH UNI EN10213	Stainless steel CF8M ASTM A351
02	Disc (≤ DN80)	Stainless steel AISI316 UNI EN10088	Bronze UNI EN1982 G-CuSn5Zn5Pb5	Stainless steel AISI316 UNI EN10088
02	Disc (≥ DN100)	Cast steel GP240-GH UNI EN10213 plus AISI316 facing welding	Bronze UNI EN1982 G-CuSn5Zn5Pb5	Cast steel GP240-GH UNI EN10213 plus AISI316 facing welding
03	Inner head flange	Cast iron UNI EN1561 EN-GJL-250	Cast iron UNI EN1561 EN-GJL-250	Cast iron UNI EN1561 EN-GJL-250
04	Stem	Stainless steel AISI316 UNI EN10088	Stainless steel AISI316 UNI EN10088	Stainless steel AISI316 UNI EN10088
05	Piston	Steel 9SMnPb28 UNI EN10087	Steel 9SMnPb28 UNI EN10087	Steel 9SMnPb28 UNI EN10087
06	Housing assembly	Fe52.2 GALVANIZED	Fe52.2 GALVANIZED	Fe52.2 GALVANIZED
07	Back rod	Steel 9SMnPb28 UNI EN10087	Steel 9SMnPb28 UNI EN10087	Steel 9SMnPb28 UNI EN10087
08	Disk spring	Steel UNI EN10270	Steel UNI EN10270	Steel UNI EN10270
09	Proximity switch	CEED BG12/2PF2 PNP CEOM E2FX2E2G NPN	CEED BG12/2PF2 PNP CEOM E2FX2E2G NPN	CEED BG12/2PF2 PNP CEOM E2FX2E2G NPN
10	Indicator washer	Steel 9SMnPb28 UNI EN10087	Steel 9SMnPb28 UNI EN10087	Steel 9SMnPb28 UNI EN10087
11	Flange	Steel UNI C40	Steel UNI C40	Steel UNI C40
12	Snap ring ø5	Stainless steel AISI316 UNI EN10088	Stainless steel AISI316 UNI EN10088	Stainless steel AISI316 UNI EN10088
13	Collar	Fe52.2 GALVANIZED	Fe52.2 GALVANIZED	Fe52.2 GALVANIZED
14	Shield	Stainless steel AISI316 UNI EN10088	Stainless steel AISI316 UNI EN10088	Stainless steel AISI316 UNI EN10088

Nota: Combinazioni materiali non standard a richiesta
Note: Non standard materials combinations on request

Valvole ad angolo retto PN10DIN-PN16 con attuatore idraulico semplice effetto normalmente aperto (FO)

Angle valves NP10DIN-NP16 with hydraulic single acting actuator fail open (FO)

Tab.127A-SR-FO

(Ex Tab. 129/1-SR-FO)

Conform to:
UNI EN1092
DIN 3202

Esecuzione 01
con otturatore Com.

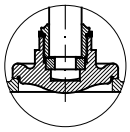

Execution 01
with SDSL disc

Esecuzione 02
con otturatore Aut.

Execution 02
with SDNR disc

con Proximity limit switch (a richiesta)
with Proximity limit switch (on request)

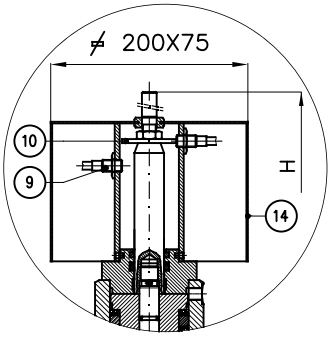

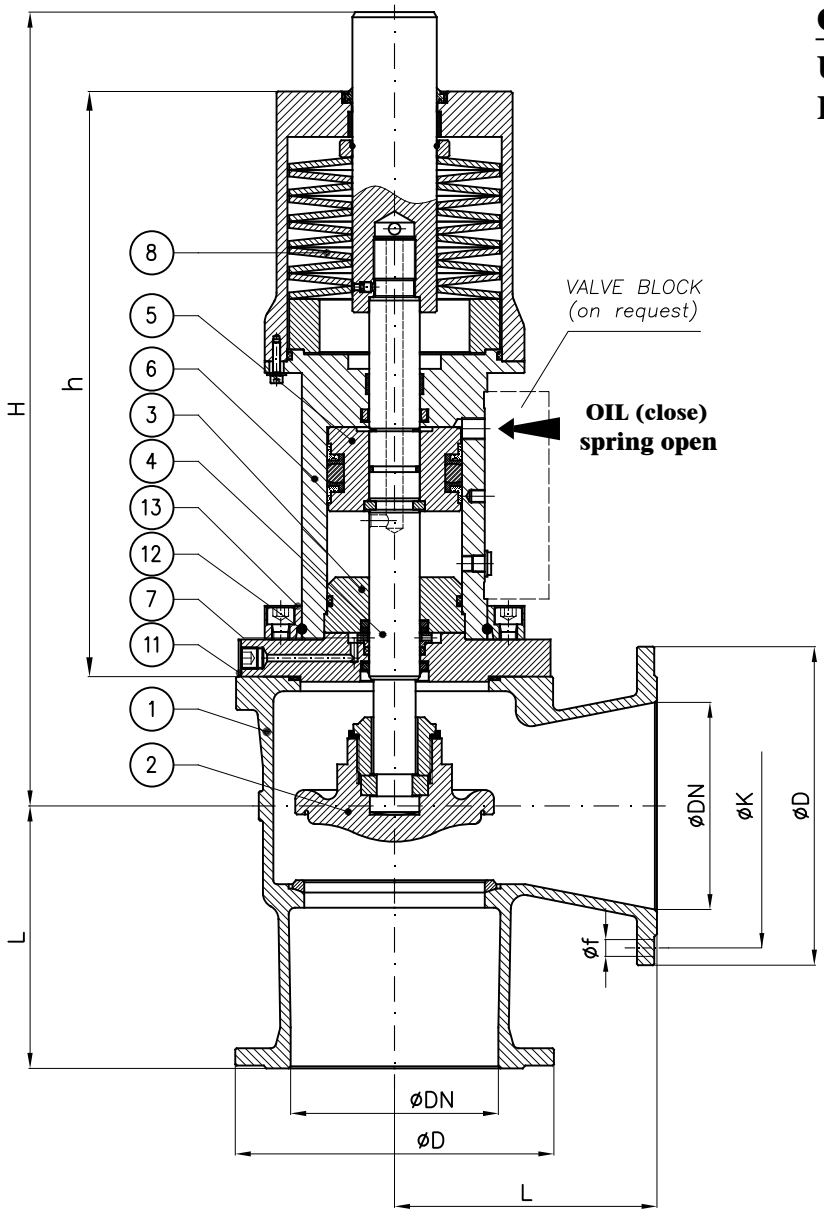

N.B.: Il dimensionamento e quindi anche l'ingombro dell'attuatore è funzione dei seguenti dati che devono sempre essere forniti:

- Pressione esercizio della valvola
- pressione olio all'attuatore
- Servizio

Note.: The size and so the overall dimension of the actuator depends by the following informations that should always be provided:

- *Valve's working pressure*
- *Oil pressure to actuator*
- *Service*

					PN10DIN				PN16			
DN	h (~)	H (~)	L	Weight (Kg)	øD	K	f	Holes NO. f	øD	K	f	Holes NO. f
32	305	385	105		140	100	18	4	140	100	18	4
40	305	385	115		150	110	18	4	150	110	18	4
50	295	385	125		165	125	18	4	165	125	18	4
65	285	385	145		185	145	18	4	185	145	18	4
80	335	435	155		200	160	18	8	200	160	18	8
100	320	435	175		220	180	18	8	220	180	18	8
125	420	550	200		250	210	18	8	250	210	18	8
150	485	630	225		285	240	22	8	285	240	22	8
200	485	675	275		340	295	22	8	340	295	22	12
250	565	725	325		395	350	22	12	405	355	26	12

Combinazione materiali standard – Standard materials Combination				
		A/316	A/B	CF8M/316
ITEM	DENOMINAZIONE DENOMINATION	MATERIALE MATERIAL	MATERIALE MATERIAL	MATERIALE MATERIAL
01	Body	Cast steel GP240-GH UNI EN10213	Cast steel GP240-GH UNI EN10213	Stainless steel CF8M ASTM A351
02	Disc (≤ DN80)	Stainless steel AISI316 UNI EN10088	Bronze UNI EN1982 G-CuSn5Zn5Pb5	Stainless steel AISI316 UNI EN10088
02	Disc (≥ DN100)	Cast steel GP240-GH UNI EN10213 plus AISI316 facing welding	Bronze UNI EN1982 G-CuSn5Zn5Pb5	Cast steel GP240-GH UNI EN10213 plus AISI316 facing welding
03	Inner head flange	Cast iron UNI EN1561 EN-GJL-250	Cast iron UNI EN1561 EN-GJL-250	Cast iron UNI EN1561 EN-GJL-250
04	Stem	Stainless steel AISI316 UNI EN10088	Stainless steel AISI316 UNI EN10088	Stainless steel AISI316 UNI EN10088
05	Piston	Steel 9SMnPb28 UNI EN10087	Steel 9SMnPb28 UNI EN10087	Steel 9SMnPb28 UNI EN10087
06	Housing assembly	Fe52.2 GALVANIZED	Fe52.2 GALVANIZED	Fe52.2 GALVANIZED
07	Back rod	Steel 9SMnPb28 UNI EN10087	Steel 9SMnPb28 UNI EN10087	Steel 9SMnPb28 UNI EN10087
08	Disk spring	Steel UNI EN10270	Steel UNI EN10270	Steel UNI EN10270
09	Proximity switch	CEED BG12/2PF2 PNP CEOM E2FX2E2G NPN	CEED BG12/2PF2 PNP CEOM E2FX2E2G NPN	CEED BG12/2PF2 PNP CEOM E2FX2E2G NPN
10	Indicator washer	Steel 9SMnPb28 UNI EN10087	Steel 9SMnPb28 UNI EN10087	Steel 9SMnPb28 UNI EN10087
11	Flange	Steel UNI C40	Steel UNI C40	Steel UNI C40
12	Snap ring ø5	Stainless steel AISI316 UNI EN10088	Stainless steel AISI316 UNI EN10088	Stainless steel AISI316 UNI EN10088
13	Collar	Fe52.2 GALVANIZED	Fe52.2 GALVANIZED	Fe52.2 GALVANIZED
14	Shield	Stainless steel AISI316 UNI EN10088	Stainless steel AISI316 UNI EN10088	Stainless steel AISI316 UNI EN10088

Nota: Combinazioni materiali non standard a richiesta
Note: Non standard materials combinations on request

Valvole ad angolo retto - serie pesante PN10DIN-PN16
Angle valves angle type - heavy class NP10DIN-NP16

Tab.127B

Conform to:
UNI EN1092
DIN 3202

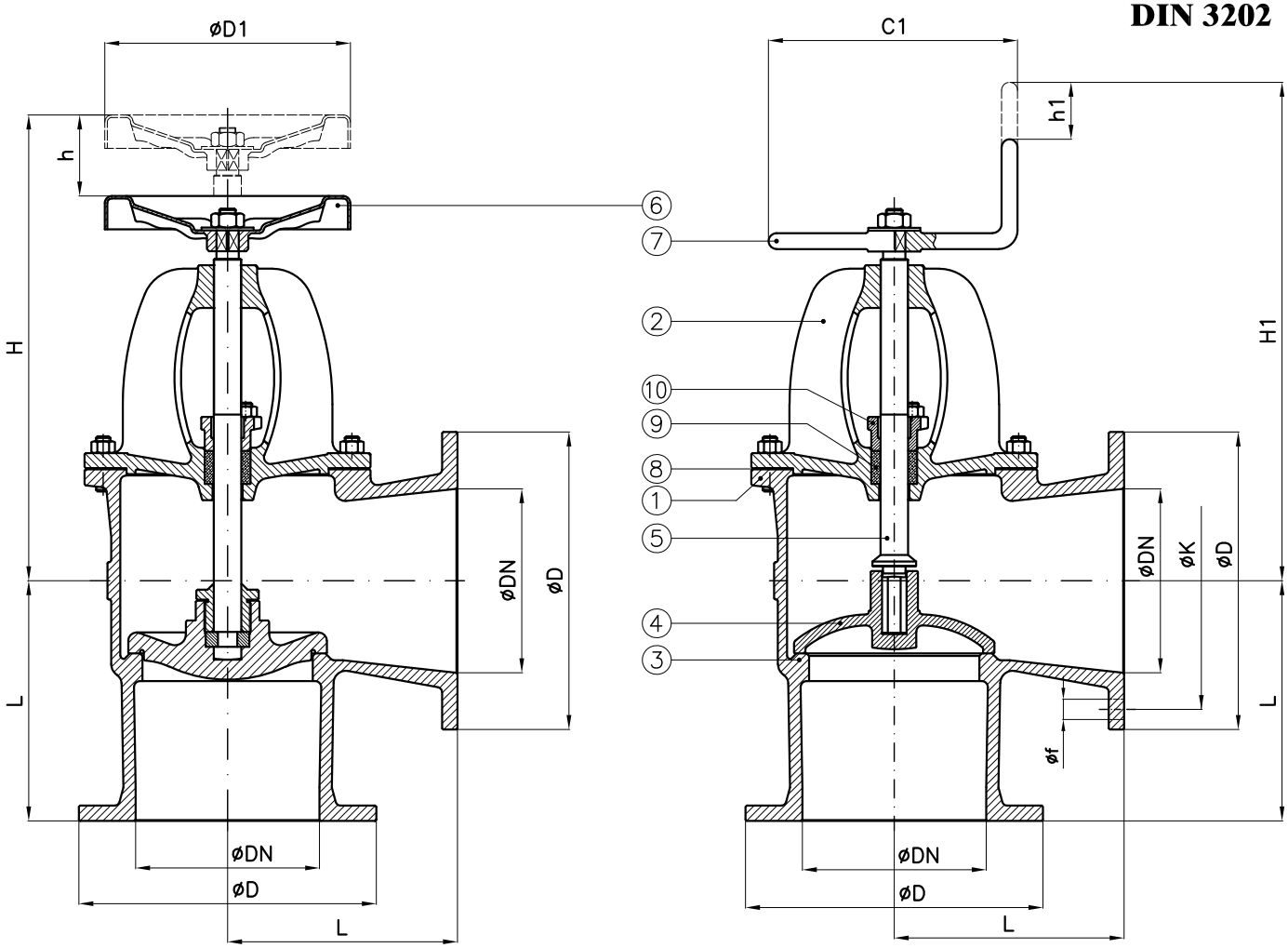

Tab.127B-SDSL TYPE	PN10DIN	PN16
comandata (SDSL) with fixed disc (SDSL)	-	UNAV 9809

Tab.127B-SDNR TYPE	PN10DIN	PN16
semiautomatica (SDNR) with loose disc (SDNR)	-	UNAV 9812

									PN10DIN				PN16			
DN	C1	D1	H SDSL (~)	h SDSL	H1 SDNR (~)	h1 SDNR	L	Weight (Kg)	D	K	f	Holes NO. f	D	K	f	Holes NO. f
15	100	100	200	12	225	8	85	6	95	65	14	4	95	65	14	4
20	100	100	200	12	225	8	85	6	105	75	14	4	105	75	14	4
25	100	100	210	14	230	9	90	7	115	85	14	4	115	85	14	4
32	125	125	240	17	270	10	105	11	140	100	18	4	140	100	18	4
40	125	125	230	20	255	12	115	11	150	110	18	4	150	110	18	4
50	125	125	245	24	270	14	125	14	165	125	18	4	165	125	18	4
65	175	175	295	32	320	18	145	22	185	145	18	4	185	145	18	4
80	175	175	305	35	330	20	155	24	200	160	18	8	200	160	18	8
100	200	200	350	45	360	28	175	38	220	180	18	8	220	180	18	8
125	225	225	385	54	395	32	200	52	250	210	18	8	250	210	18	8
150	225	300	410	62	420	38	225	79	285	240	22	8	285	240	22	8
175	250	400	515	74	535	45	250	105	315	270	22	8	315	270	22	8
200	250	400	570	82	555	50	275	129	340	295	22	8	340	295	22	12
250	300	500	575	100	590	66	325	192	395	350	22	12	405	355	26	12
300	425	575	680	118	690	85	375	253	445	400	22	12	460	410	26	12
350	500			130		90	400	396	505	460	22	16	520	470	26	16
400	575			135		100	450	458	565	515	26	16	580	525	30	16
450	650			160		115	480	594	615	565	26	20	640	585	30	20
500				180		130	535	935	670	620	26	20	715	650	33	20
600				215		160	550	1650	780	725	30	20	840	770	36	20

Combinazione materiali standard – Standard materials Combination

		B/316	B/B
ITEM	DENOMINAZIONE DENOMINATION	MATERIALE MATERIAL	MATERIALE MATERIAL
01	Body	Bronze UNI EN1982 G-CuSn5Zn5Pb5	Bronze UNI EN1982 G-CuSn5Zn5Pb5
02	Bonnet	Bronze UNI EN1982 G-CuSn5Zn5Pb5	Bronze UNI EN1982 G-CuSn5Zn5Pb5
03	Integral body seat	Bronze UNI EN1982 G-CuSn5Zn5Pb5	Bronze UNI EN1982 G-CuSn5Zn5Pb5
04	Disc	Stainless steel AISI316 UNI EN10088	Bronze UNI EN1982 G-CuSn5Zn5Pb5
05	Stem	Stainless steel AISI316 UNI EN10088	Brass CW617N (OT58)
06	Handwheel	Sheet of carbon steel	Sheet of carbon steel
07	Handle	Steel A37 UNI EN10217-1	Steel A37 UNI EN10217-1
08	Gasket	EPDM	EPDM
09	Packing	Carbograph GR8800	Carbograph GR8800
10	Gland bushing	Brass CW509L (OT60)	Brass CW509L (OT60)

Nota: Combinazioni materiali non standard a richiesta
Note: Non standard materials combinations on request

Valvole ad angolo retto PN10DIN-PN16 con attuatore idraulico doppio effetto
Angle valves NP10DIN-NP16 with hydraulic double acting actuator

Tab.127B-DA

(Ex Tab. 129/1-DA)

Conform to:
UNI EN1092
DIN 3202

Esecuzione 01
con otturatore Com.

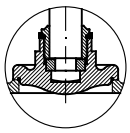

Execution 01
with SDSL disc

Esecuzione 02
con otturatore Aut.

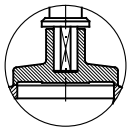

Execution 02
with SDNR disc

con Proximity limit switch (a richiesta)
with Proximity limit switch (on request)

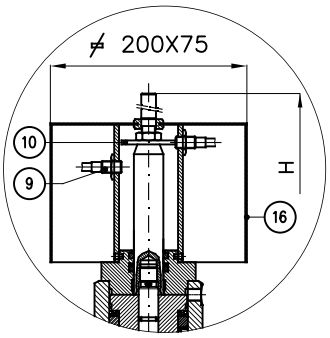

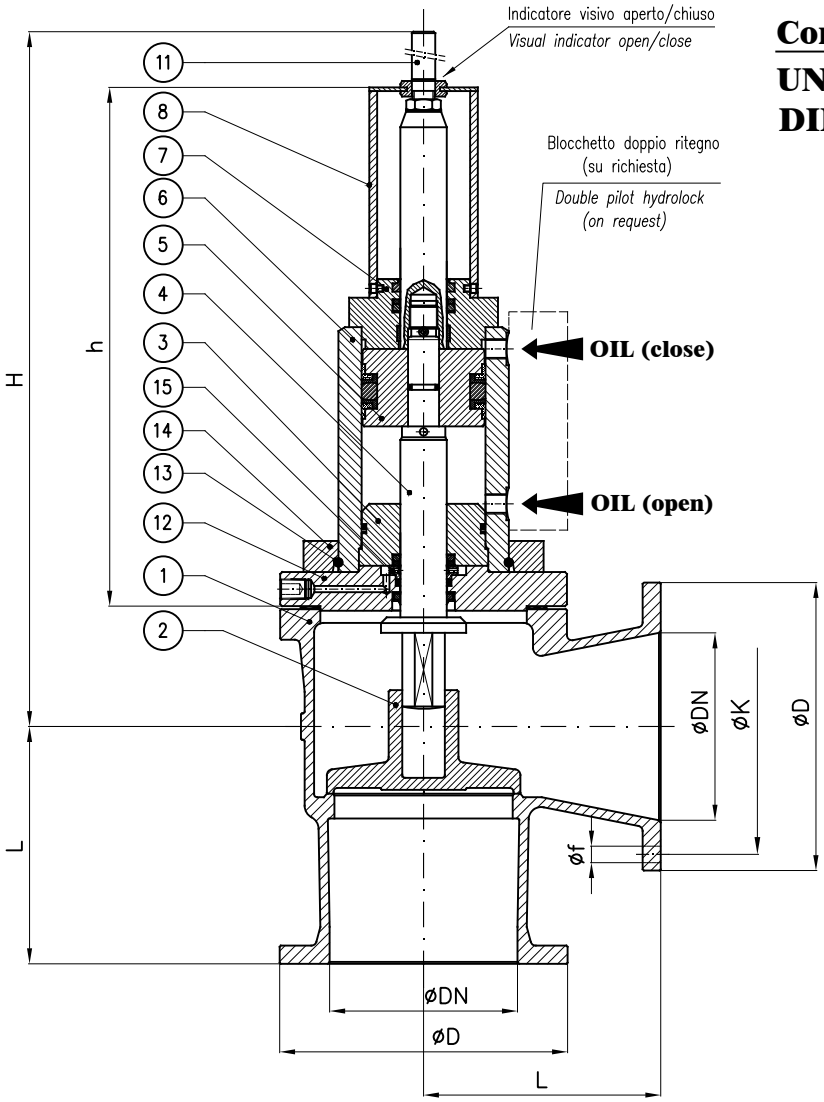

N.B.: Il dimensionamento e quindi anche l'ingombro dell'attuatore è funzione dei seguenti dati che devono sempre essere forniti:

- Pressione esercizio della valvola
- pressione olio all'attuatore
- Servizio

Note.: The size and so the overall dimension of the actuator depends by the following informations that should always be provided:

- *Valve's working pressure*
- *Oil pressure to actuator*
- *Service*

					PN10DIN				PN16			
DN	h (~)	H (~)	L	Weight (Kg)	øD	K	f	Holes NO. f	øD	K	f	Holes NO. f
20	210	265	85		105	75	14	4	105	75	14	4
25	210	270	90		115	85	14	4	115	85	14	4
32	335	415	105		140	100	18	4	140	100	18	4
40	335	420	115		150	110	18	4	150	110	18	4
50	320	420	125		165	125	18	4	165	125	18	4
65	315	420	145		185	145	18	4	185	145	18	4
80	340	445	155		200	160	18	8	200	160	18	8
100	340	455	175		220	180	18	8	220	180	18	8
125	360	495	200		250	210	18	8	250	210	18	8
150	360	505	225		285	240	22	8	285	240	22	8
200	440	655	275		340	295	22	8	340	295	22	12
250	440	660	325		395	350	22	12	405	355	26	12
300	525	850	375		445	400	22	12	460	410	26	12

Combinazione materiali standard – Standard materials Combination			
		B/316	B/B
ITEM	DENOMINAZIONE DENOMINATION	MATERIALE MATERIAL	MATERIALE MATERIAL
01	Body	Bronze UNI EN1982 G-CuSn5Zn5Pb5	Bronze UNI EN1982 G-CuSn5Zn5Pb5
02	Disc (≤ DN80)	Stainless steel AISI316 UNI EN10088	Bronze UNI EN1982 G-CuSn5Zn5Pb5
02	Disc (≥ DN100)	Cast steel GP240-GH UNI EN10213 plus AISI316 facing welding	Bronze UNI EN1982 G-CuSn5Zn5Pb5
03	Inner head flange	Cast iron UNI EN1561 EN-GJL-250	Cast iron UNI EN1561 EN-GJL-250
04	Stem	Stainless steel AISI316 UNI EN10088	Stainless steel AISI316 UNI EN10088
05	Piston	Steel 9SMnPb28 UNI EN10087	Steel 9SMnPb28 UNI EN10087
06	Housing welded assembly	Fe52.2 GALVANIZED	Fe52.2 GALVANIZED
07	Head flange	Steel UNI C40	Steel UNI C40
08	Proximity switch support	Fe37 GALVANIZED	Fe37 GALVANIZED
09	Proximity switch	CEED BG12/2PF2 PNP CEOM E2FX2E2G NPN	CEED BG12/2PF2 PNP CEOM E2FX2E2G NPN
10	Indicator washer	Steel 9SMnPb28 UNI EN10087	Steel 9SMnPb28 UNI EN10087
11	Index open/close	Brass CW617N (OT58)	Brass CW617N (OT58)
12	Flange	Bronze UNI EN1982	Bronze UNI EN1982
13	Snap ring ø5	Stainless steel AISI316 UNI EN10088	Stainless steel AISI316 UNI EN10088
14	Collar	Fe52.2 GALVANIZED	Fe52.2 GALVANIZED
15	Back rod	Steel 9SMnPb28 UNI EN10087	Steel 9SMnPb28 UNI EN10087
16	Shield	Stainless steel AISI316 UNI EN10088	Stainless steel AISI316 UNI EN10088
Nota: Combinazioni materiali non standard a richiesta Note: Non standard materials combinations on request			

Valvole ad angolo retto PN10DIN-PN16 con attuatore idraulico semplice effetto normalmente chiuso (FC)

Angle valves NP10DIN-NP16 with hydraulic single acting actuator fail close (FC)

Tab.127B-SR-FC

(Ex Tab. 129/1-SR-FC)

Conform to:
UNI EN1092
DIN 3202

Esecuzione 01
con otturatore Com.

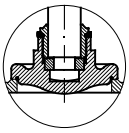

Execution 01
with SDSL disc

Esecuzione 02
con otturatore Aut.

Execution 02
with SDNR disc

con Proximity limit switch (a richiesta)
with Proximity limit switch (on request)

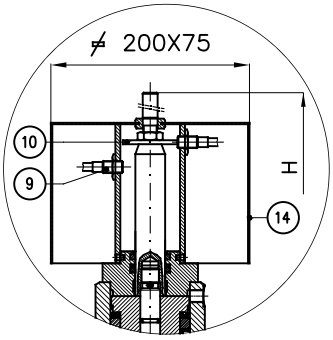

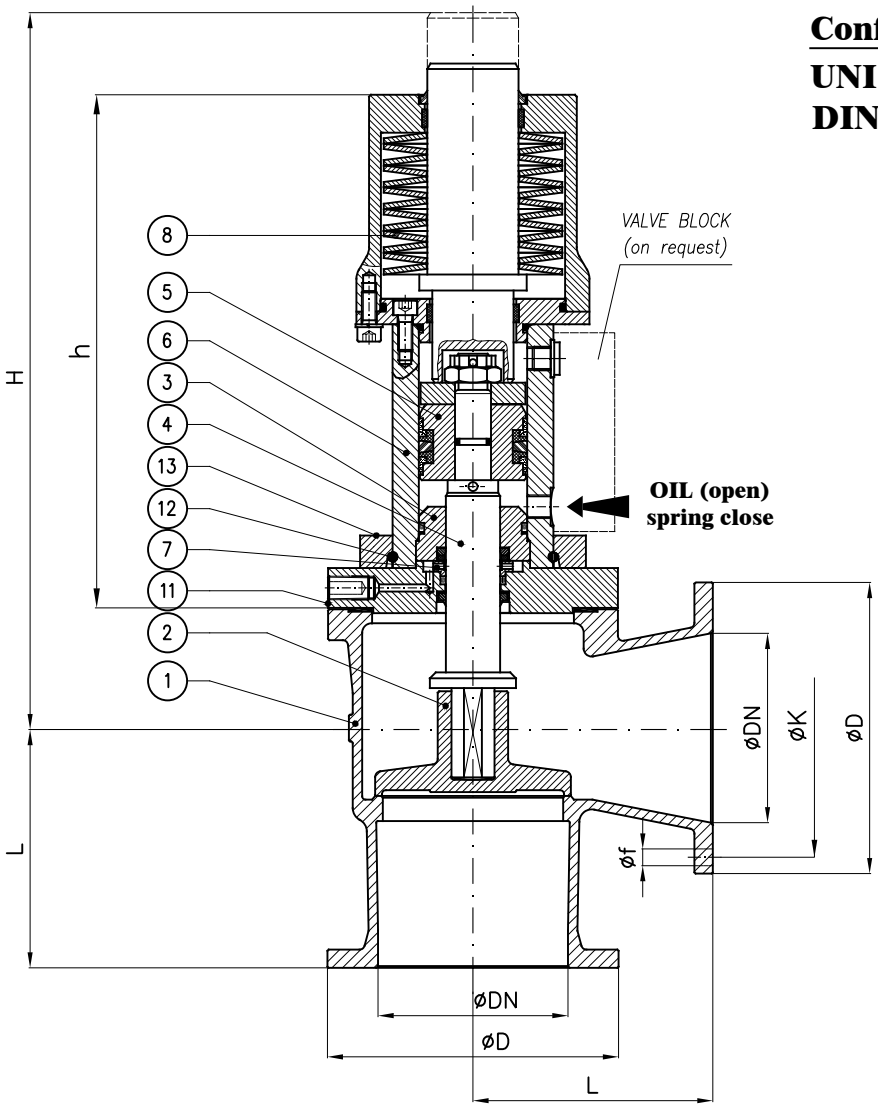

N.B.: Il dimensionamento e quindi anche l'ingombro dell'attuatore è funzione dei seguenti dati che devono sempre essere forniti:

- Pressione esercizio della valvola
- pressione olio all'attuatore
- Servizio

Note.: The size and so the overall dimension of the actuator depends by the following informations that should always be provided:

- *Valve's working pressure*
- *Oil pressure to actuator*
- *Service*

					PN10DIN				PN16			
DN	h (~)	H (~)	L	Weight (Kg)	øD	K	f	Holes NO. f	øD	K	f	Holes NO. f
32	305	385	105		140	100	18	4	140	100	18	4
40	305	385	115		150	110	18	4	150	110	18	4
50	295	385	125		165	125	18	4	165	125	18	4
65	285	385	145		185	145	18	4	185	145	18	4
80	335	435	155		200	160	18	8	200	160	18	8
100	320	435	175		220	180	18	8	220	180	18	8
125	420	550	200		250	210	18	8	250	210	18	8
150	485	630	225		285	240	22	8	285	240	22	8
200	485	675	275		340	295	22	8	340	295	22	12
250	565	725	325		395	350	22	12	405	355	26	12

Combinazione materiali standard – Standard materials Combination			
		B/316	B/B
ITEM	DENOMINAZIONE DENOMINATION	MATERIALE MATERIAL	MATERIALE MATERIAL
01	Body	Bronze UNI EN1982 G-CuSn5Zn5Pb5	Bronze UNI EN1982 G-CuSn5Zn5Pb5
02	Disc (≤ DN80)	Stainless steel AISI316 UNI EN10088	Bronze UNI EN1982 G-CuSn5Zn5Pb5
02	Disc (≥ DN100)	Cast steel GP240-GH UNI EN10213 plus AISI316 facing welding	Bronze UNI EN1982 G-CuSn5Zn5Pb5
03	Inner head flange	Cast iron UNI EN1561 EN-GJL-250	Cast iron UNI EN1561 EN-GJL-250
04	Stem	Stainless steel AISI316 UNI EN10088	Stainless steel AISI316 UNI EN10088
05	Piston	Steel 9SMnPb28 UNI EN10087	Steel 9SMnPb28 UNI EN10087
06	Housing assembly	Fe52.2 GALVANIZED	Fe52.2 GALVANIZED
07	Back rod	Steel 9SMnPb28 UNI EN10087	Steel 9SMnPb28 UNI EN10087
08	Disk spring	Steel UNI EN10270	Steel UNI EN10270
09	Proximity switch	CEED BG12/2PF2 PNP CEOM E2FX2E2G NPN	CEED BG12/2PF2 PNP CEOM E2FX2E2G NPN
10	Indicator washer	Steel 9SMnPb28 UNI EN10087	Steel 9SMnPb28 UNI EN10087
11	Flange	Bronze UNI EN1982	Bronze UNI EN1982
12	Snap ring ø5	Stainless steel AISI316 UNI EN10088	Stainless steel AISI316 UNI EN10088
13	Collar	Fe52.2 GALVANIZED	Fe52.2 GALVANIZED
14	Shield	Stainless steel AISI316 UNI EN10088	Stainless steel AISI316 UNI EN10088

Nota: Combinazioni materiali non standard a richiesta
Note: Non standard materials combinations on request

Valvole ad angolo retto PN10DIN-PN16 con attuatore idraulico semplice effetto normalmente aperto (FO)

Angle valves NP10DIN-NP16 with hydraulic single acting actuator fail open (FO)

Tab.127B-SR-FO

(Ex Tab. 129/1-SR-FO)

Conform to:
UNI EN1092
DIN 3202

Esecuzione 01
con otturatore Com.

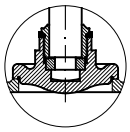

Execution 01
with SDSL disc

Esecuzione 02
con otturatore Aut.

Execution 02
with SDNR disc

con Proximity limit switch (a richiesta)
with Proximity limit switch (on request)

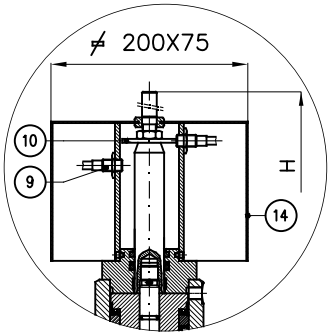

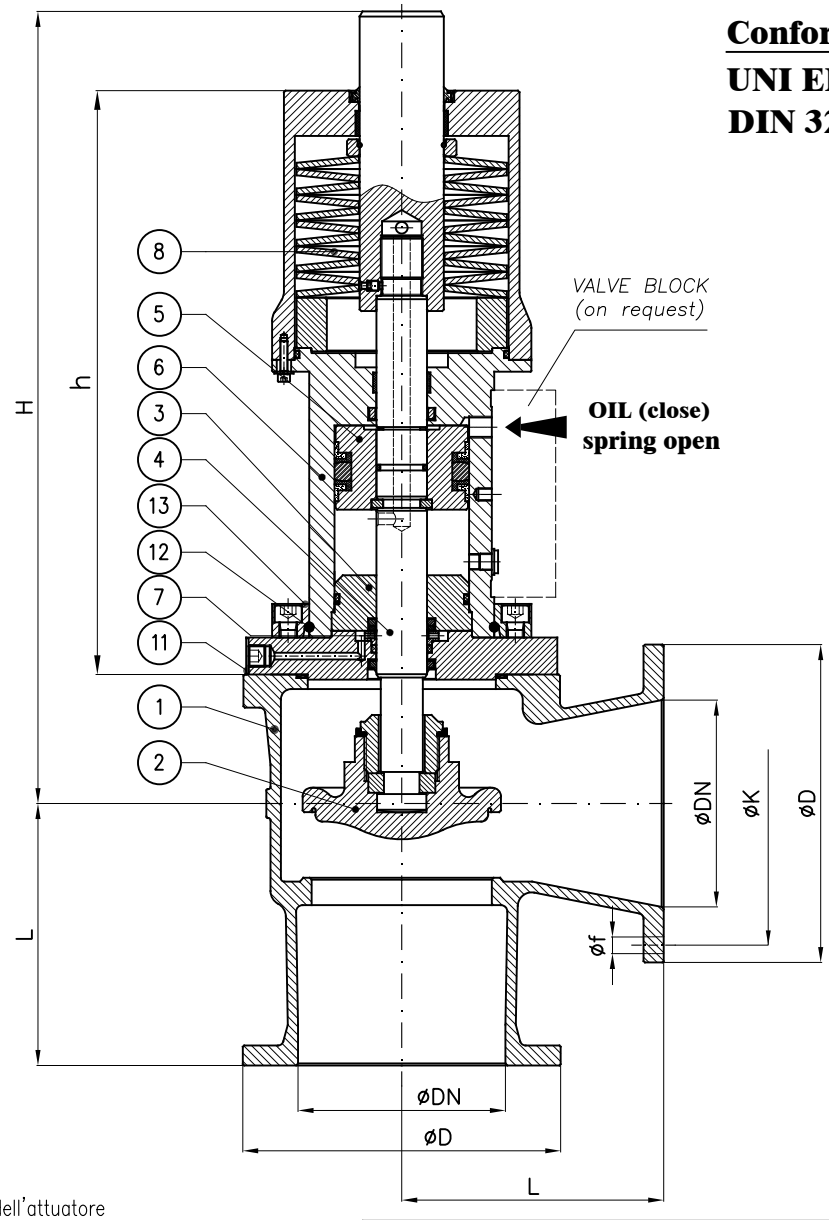

N.B.: Il dimensionamento e quindi anche l'ingombro dell'attuatore è funzione dei seguenti dati che devono sempre essere forniti:

- Pressione esercizio della valvola
- pressione olio all'attuatore
- Servizio

Note.: The size and so the overall dimension of the actuator depends by the following informations that should always be provided:

- *Valve's working pressure*
- *Oil pressure to actuator*
- *Service*

					PN10DIN				PN16			
DN	h (~)	H (~)	L	Weight (Kg)	øD	K	f	Holes NO. f	øD	K	f	Holes NO. f
32	305	385	105		140	100	18	4	140	100	18	4
40	305	385	115		150	110	18	4	150	110	18	4
50	295	385	125		165	125	18	4	165	125	18	4
65	285	385	145		185	145	18	4	185	145	18	4
80	335	435	155		200	160	18	8	200	160	18	8
100	320	435	175		220	180	18	8	220	180	18	8
125	420	550	200		250	210	18	8	250	210	18	8
150	485	630	225		285	240	22	8	285	240	22	8
200	485	675	275		340	295	22	8	340	295	22	12
250	565	725	325		395	350	22	12	405	355	26	12

Combinazione materiali standard – Standard materials Combination

		B/316	B/B
ITEM	DENOMINAZIONE DENOMINATION	MATERIALE MATERIAL	MATERIALE MATERIAL
01	Body	Bronze UNI EN1982 G–CuSn5Zn5Pb5	Bronze UNI EN1982 G–CuSn5Zn5Pb5
02	Disc (≤ DN80)	Stainless steel AISI316 UNI EN10088	Bronze UNI EN1982 G–CuSn5Zn5Pb5
02	Disc (≥ DN100)	Cast steel GP240–GH UNI EN10213 plus AISI316 facing welding	Bronze UNI EN1982 G–CuSn5Zn5Pb5
03	Inner head flange	Cast iron UNI EN1561 EN–GJL–250	Cast iron UNI EN1561 EN–GJL–250
04	Stem	Stainless steel AISI316 UNI EN10088	Stainless steel AISI316 UNI EN10088
05	Piston	Steel 9SMnPb28 UNI EN10087	Steel 9SMnPb28 UNI EN10087
06	Housing assembly	Fe52.2 GALVANIZED	Fe52.2 GALVANIZED
07	Back rod	Steel 9SMnPb28 UNI EN10087	Steel 9SMnPb28 UNI EN10087
08	Disk spring	Steel UNI EN10270	Steel UNI EN10270
09	Proximity switch	CEED BG12/2PF2 PNP CEOM E2FX2E2G NPN	CEED BG12/2PF2 PNP CEOM E2FX2E2G NPN
10	Indicator washer	Steel 9SMnPb28 UNI EN10087	Steel 9SMnPb28 UNI EN10087
11	Flange	Bronze UNI EN1982	Bronze UNI EN1982
12	Snap ring ø5	Stainless steel AISI316 UNI EN10088	Stainless steel AISI316 UNI EN10088
13	Collar	Fe52.2 GALVANIZED	Fe52.2 GALVANIZED
14	Shield	Stainless steel AISI316 UNI EN10088	Stainless steel AISI316 UNI EN10088

Nota: Combinazioni materiali non standard a richiesta
Note: Non standard materials combinations on request

Valvole ad angolo retto - serie pesante PN10DIN-PN16
Angle valves angle type - heavy class NP10DIN-NP16

Tab.127G

Conform to:
UNI EN1092
DIN 3202

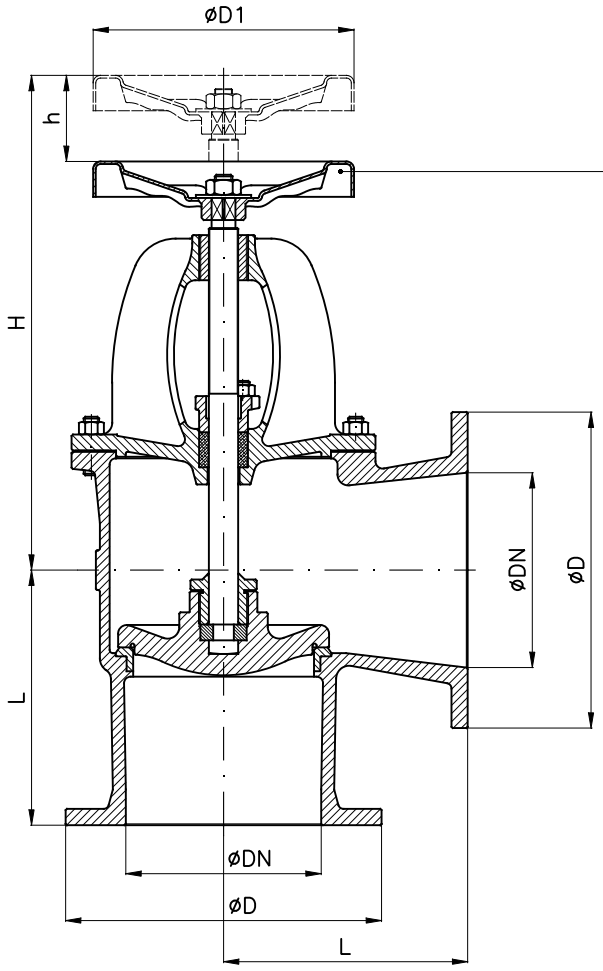

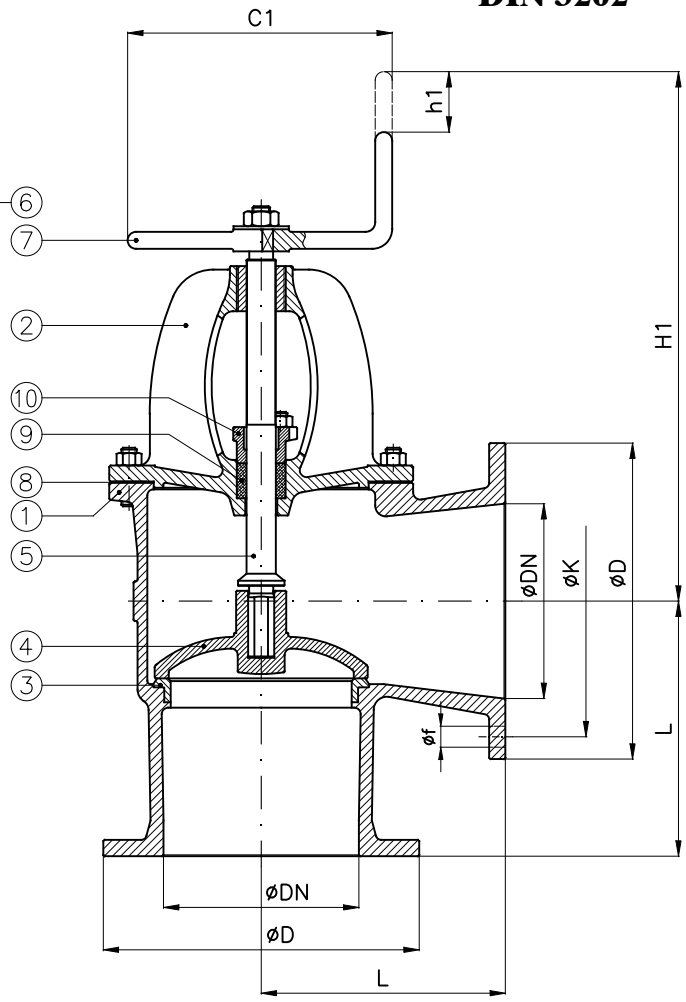

Tab.127G-SDSL TYPE	PN10DIN	PN16
comandata (SDSL) with fixed disc (SDSL)	-	UNI 3420 UNAV 8426

Tab.127G-SDNR TYPE	PN10DIN	PN16
semiautomatica (SDNR) with loose disc (SDNR)	-	UNI 3424 UNAV 8428

									PN10DIN				PN16			
DN	C1	D1	H SDSL (~)	h SDSL	H1 SDNR (~)	h1 SDNR	L	Weight (Kg)	D	K	f	Holes NO. f	D	K	f	Holes NO. f
15	100	100	200	12	230	8	85	6	95	65	14	4	95	65	14	4
20	100	100	200	12	230	8	85	6	105	75	14	4	105	75	14	4
25	100	100	210	14	230	9	90	8	115	85	14	4	115	85	14	4
32	125	125	220	17	250	10	105	11.5	140	100	18	4	140	100	18	4
40	125	125	230	20	255	12	115	12	150	110	18	4	150	110	18	4
50	125	125	235	24	255	14	125	14	165	125	18	4	165	125	18	4
65	175	175	290	32	315	18	145	21	185	145	18	4	185	145	18	4
80	175	175	305	35	330	20	155	24	200	160	18	8	200	160	18	8
100	200	200	350	45	350	28	175	37	220	180	18	8	220	180	18	8
125	225	225	380	54	390	32	200	52	250	210	18	8	250	210	18	8
150	225	300	400	62	415	38	225	70	285	240	22	8	285	240	22	8
175	250	400	470	74	500	45	250	90	315	270	22	8	315	270	22	8
200	250	400	530	82	520	50	275	130	340	295	22	8	340	295	22	12
250	300	500	580	100	570	66	325	168	395	350	22	12	405	355	26	12
300	425	575	690	118	690	85	375	232	445	400	22	12	460	410	26	12
350	500			130		90	400	360	505	460	22	16	520	470	26	16
400	575			135		100	450	409	565	515	26	16	580	525	30	16
450	650			160		115	500	540	615	565	26	20	640	585	30	20
500				180		130	535	850	670	620	26	20	715	650	33	20
600				215		160	550		780	725	30	20	840	770	36	20

Combinazione materiali standard – Standard materials Combination			
		G/316	G/B
ITEM	DENOMINAZIONE DENOMINATION	MATERIALE MATERIAL	MATERIALE MATERIAL
01	Body	Cast iron UNI EN1561 EN-GJL-250	Cast iron UNI EN1561 EN-GJL-250
02	Bonnet	Cast iron UNI EN1561 EN-GJL-250	Cast iron UNI EN1561 EN-GJL-250
03	Body seat	Stainless steel AISI316 UNI EN10088	Stainless steel AISI316 UNI EN10088
04	Disc (≤ DN80)	Stainless steel AISI316 UNI EN10088	Bronze UNI EN1982 G-CuSn5Zn5Pb5
04	Disc (≥ DN100)	Cast steel GP240-GH UNI EN10213 plus AISI316 facing welding	Bronze UNI EN1982 G-CuSn5Zn5Pb5
05	Stem	Stainless steel AISI316 UNI EN10088	Brass CW617N (OT58)
06	Handwheel	Sheet of carbon steel	Sheet of carbon steel
07	Handle	Steel A37 UNI EN10217-1	Steel A37 UNI EN10217-1
08	Gasket	Planiflex KG carbo/C PF81	Planiflex KG carbo/C PF81
09	Packing	Carbograph GR8800	Carbograph GR8800
10	Gland bushing	Bronze UNI EN1982 G-CuSn5Zn5Pb5	Bronze UNI EN1982 G-CuSn5Zn5Pb5

Nota: Combinazioni materiali non standard a richiesta
Note: Non standard materials combinations on request

Valvole ad angolo retto PN10DIN-PN16 con attuatore idraulico doppio effetto
Angle valves NP10DIN-NP16 with hydraulic double acting actuator

Tab.127G-DA

Conform to:
UNI EN1092
DIN 3202

Esecuzione 01
con otturatore Com.

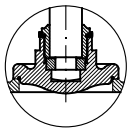

Execution 01
with SDSL disc

Esecuzione 02
con otturatore Aut.

Execution 02
with SDNR disc

con Proximity limit switch (a richiesta)
with Proximity limit switch (on request)

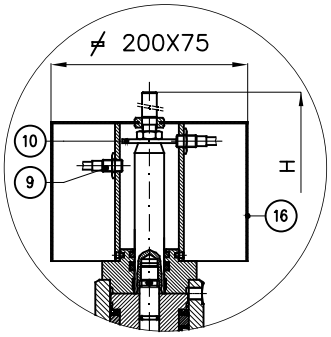

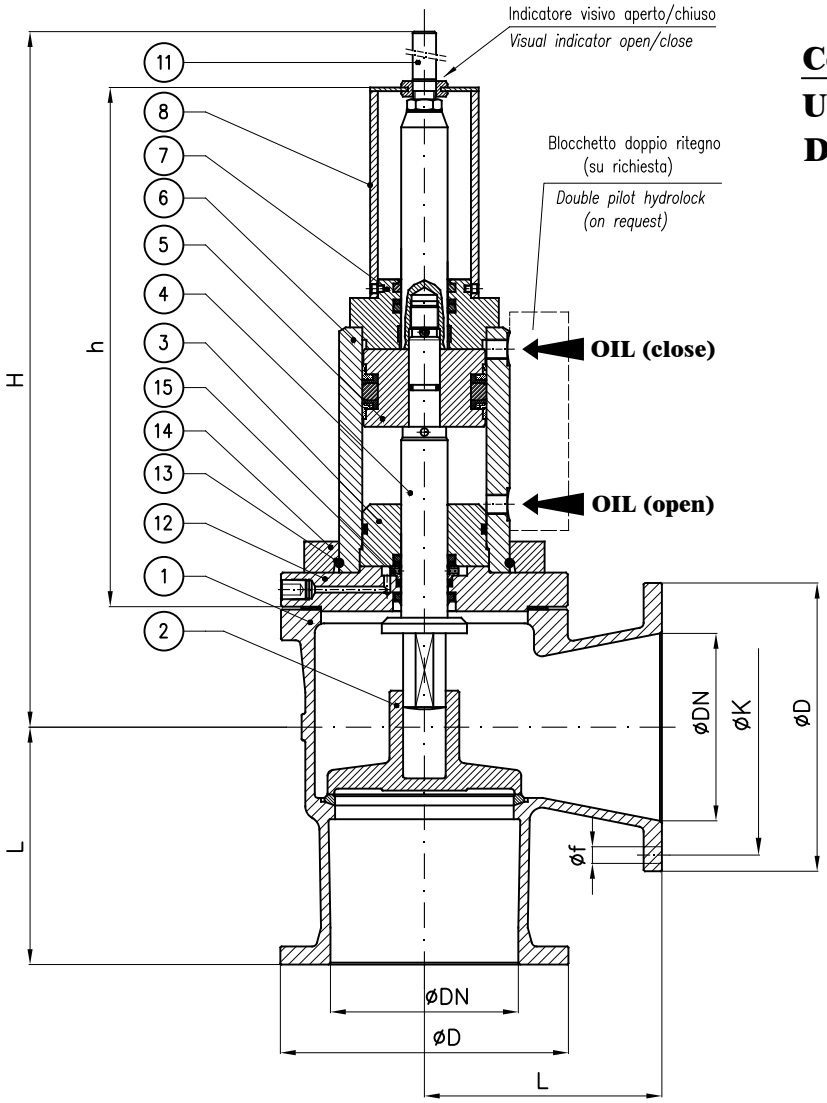

N.B.: Il dimensionamento e quindi anche l'ingombro dell'attuatore è funzione dei seguenti dati che devono sempre essere forniti:

- Pressione esercizio della valvola
- pressione olio all'attuatore
- Servizio

Note.: The size and so the overall dimension of the actuator depends by the following informations that should always be provided:

- *Valve's working pressure*
- *Oil pressure to actuator*
- *Service*

					PN10DIN				PN16			
DN	h (~)	H (~)	L	Weight (Kg)	øD	K	f	Holes NO. f	øD	K	f	Holes NO. f
20	210	265	85		105	75	14	4	105	75	14	4
25	210	270	90		115	85	14	4	115	85	14	4
32	335	415	105		140	100	18	4	140	100	18	4
40	335	420	115		150	110	18	4	150	110	18	4
50	320	420	125		165	125	18	4	165	125	18	4
65	315	420	145		185	145	18	4	185	145	18	4
80	340	445	155		200	160	18	8	200	160	18	8
100	340	455	175		220	180	18	8	220	180	18	8
125	360	495	200		250	210	18	8	250	210	18	8
150	360	505	225		285	240	22	8	285	240	22	8
200	440	655	275		340	295	22	8	340	295	22	12
250	440	660	325		395	350	22	12	405	355	26	12
300	525	850	375		445	400	22	12	460	410	26	12

Combinazione materiali standard – Standard materials Combination

		G/316	G/B
ITEM	DENOMINAZIONE DENOMINATION	MATERIALE MATERIAL	MATERIALE MATERIAL
01	Body	Cast iron UNI EN1561 EN-GJL-250	Cast iron UNI EN1561 EN-GJL-250
02	Disc (≤ DN80)	Stainless steel AISI316 UNI EN10088	Bronze UNI EN1982 G-CuSn5Zn5Pb5
02	Disc (≥ DN100)	Cast steel GP240-GH UNI EN10213 plus AISI316 facing welding	Bronze UNI EN1982 G-CuSn5Zn5Pb5
03	Inner head flange	Cast iron UNI EN1561 EN-GJL-250	Cast iron UNI EN1561 EN-GJL-250
04	Stem	Stainless steel AISI316 UNI EN10088	Stainless steel AISI316 UNI EN10088
05	Piston	Steel 9SMnPb28 UNI EN10087	Steel 9SMnPb28 UNI EN10087
06	Housing welded assembly	Fe52.2 GALVANIZED	Fe52.2 GALVANIZED
07	Head flange	Steel UNI C40	Steel UNI C40
08	Proximity switch support	Fe37 GALVANIZED	Fe37 GALVANIZED
09	Proximity switch	CEED BG12/2PF2 PNP CEOM E2FX2E2G NPN	CEED BG12/2PF2 PNP CEOM E2FX2E2G NPN
10	Indicator washer	Steel 9SMnPb28 UNI EN10087	Steel 9SMnPb28 UNI EN10087
11	Index open/close	Brass CW617N (OT58)	Brass CW617N (OT58)
12	Flange	Steel UNI C40	Steel UNI C40
13	Snap ring ø5	Stainless steel AISI316 UNI EN10088	Stainless steel AISI316 UNI EN10088
14	Collar	Fe52.2 GALVANIZED	Fe52.2 GALVANIZED
15	Back rod	Steel 9SMnPb28 UNI EN10087	Steel 9SMnPb28 UNI EN10087
16	Shield	Stainless steel AISI316 UNI EN10088	Stainless steel AISI316 UNI EN10088

Nota: Combinazioni materiali non standard a richiesta
Note: Non standard materials combinations on request

Valvole ad angolo retto PN10DIN-PN16 con attuatore idraulico semplice effetto normalmente chiuso (FC)

Angle valves NP10DIN-NP16 with hydraulic single acting actuator fail close (FC)

Tab.127G-SR-FC

Conform to:
UNI EN1092
DIN 3202

Esecuzione 01
con otturatore Com.

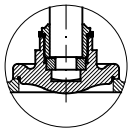

Execution 01
with SDSL disc

Esecuzione 02
con otturatore Aut.

Execution 02
with SDNR disc

con Proximity limit switch (a richiesta)
with Proximity limit switch (on request)

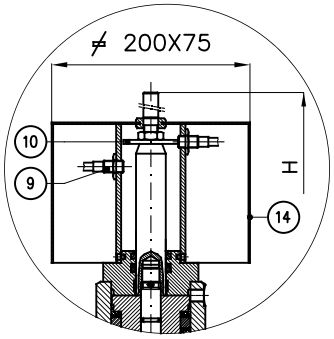

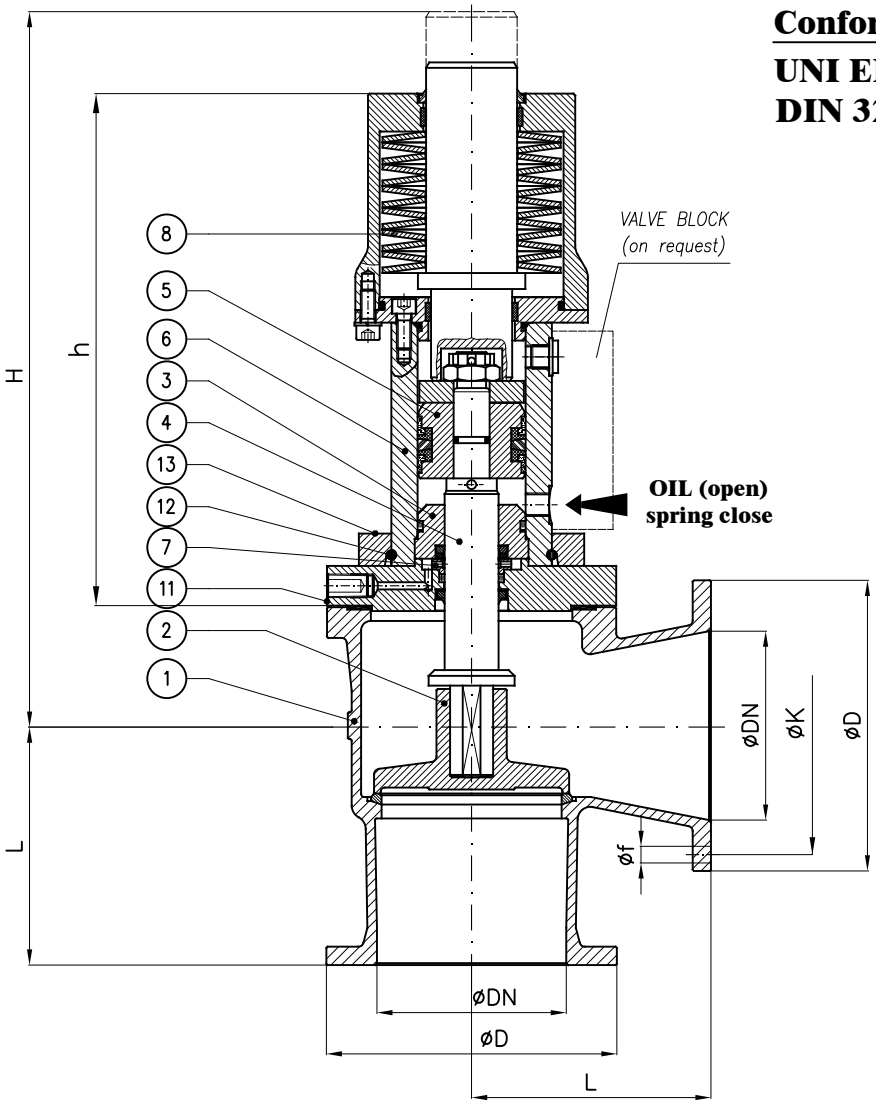

N.B.: Il dimensionamento e quindi anche l'ingombro dell'attuatore è funzione dei seguenti dati che devono sempre essere forniti:

- Pressione esercizio della valvola
- pressione olio all'attuatore
- Servizio

Note.: The size and so the overall dimension of the actuator depends by the following informations that should always be provided:

- *Valve's working pressure*
- *Oil pressure to actuator*
- *Service*

					PN10DIN				PN16			
DN	h (~)	H (~)	L	Weight (Kg)	øD	K	f	Holes NO. f	øD	K	f	Holes NO. f
32	305	385	105		140	100	18	4	140	100	18	4
40	305	385	115		150	110	18	4	150	110	18	4
50	295	385	125		165	125	18	4	165	125	18	4
65	285	385	145		185	145	18	4	185	145	18	4
80	335	435	155		200	160	18	8	200	160	18	8
100	320	435	175		220	180	18	8	220	180	18	8
125	420	550	200		250	210	18	8	250	210	18	8
150	485	630	225		285	240	22	8	285	240	22	8
200	485	675	275		340	295	22	8	340	295	22	12
250	565	725	325		395	350	22	12	405	355	26	12

Combinazione materiali standard – Standard materials Combination

		G/316	G/B
ITEM	DENOMINAZIONE DENOMINATION	MATERIALE MATERIAL	MATERIALE MATERIAL
01	Body	Cast iron UNI EN1561 EN-GJL-250	Cast iron UNI EN1561 EN-GJL-250
02	Disc (≤ DN80)	Stainless steel AISI316 UNI EN10088	Bronze UNI EN1982 G-CuSn5Zn5Pb5
02	Disc (≥ DN100)	Cast steel GP240-GH UNI EN10213 plus AISI316 facing welding	Bronze UNI EN1982 G-CuSn5Zn5Pb5
03	Inner head flange	Cast iron UNI EN1561 EN-GJL-250	Cast iron UNI EN1561 EN-GJL-250
04	Stem	Stainless steel AISI316 UNI EN10088	Stainless steel AISI316 UNI EN10088
05	Piston	Steel 9SMnPb28 UNI EN10087	Steel 9SMnPb28 UNI EN10087
06	Housing assembly	Fe52.2 GALVANIZED	Fe52.2 GALVANIZED
07	Back rod	Steel 9SMnPb28 UNI EN10087	Steel 9SMnPb28 UNI EN10087
08	Disk spring	Steel UNI EN10270	Steel UNI EN10270
09	Proximity switch	CEED BG12/2PF2 PNP CEOM E2FX2E2G NPN	CEED BG12/2PF2 PNP CEOM E2FX2E2G NPN
10	Indicator washer	Steel 9SMnPb28 UNI EN10087	Steel 9SMnPb28 UNI EN10087
11	Flange	Steel UNI C40	Steel UNI C40
12	Snap ring ø5	Stainless steel AISI316 UNI EN10088	Stainless steel AISI316 UNI EN10088
13	Collar	Fe52.2 GALVANIZED	Fe52.2 GALVANIZED
14	Shield	Stainless steel AISI316 UNI EN10088	Stainless steel AISI316 UNI EN10088

Nota: Combinazioni materiali non standard a richiesta
Note: Non standard materials combinations on request

Valvole ad angolo retto PN10DIN-PN16 con attuatore idraulico semplice effetto normalmente aperto (FO)

Angle valves NP10DIN-NP16 with hydraulic single acting actuator fail open (FO)

Tab.127G-SR-FO

Conform to:
UNI EN1092
DIN 3202

Esecuzione 01
con otturatore Com.

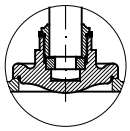

Execution 01
with SDSL disc

Esecuzione 02
con otturatore Aut.

Execution 02
with SDNR disc

con Proximity limit switch (a richiesta)
with Proximity limit switch (on request)

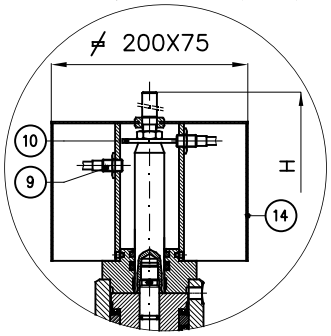

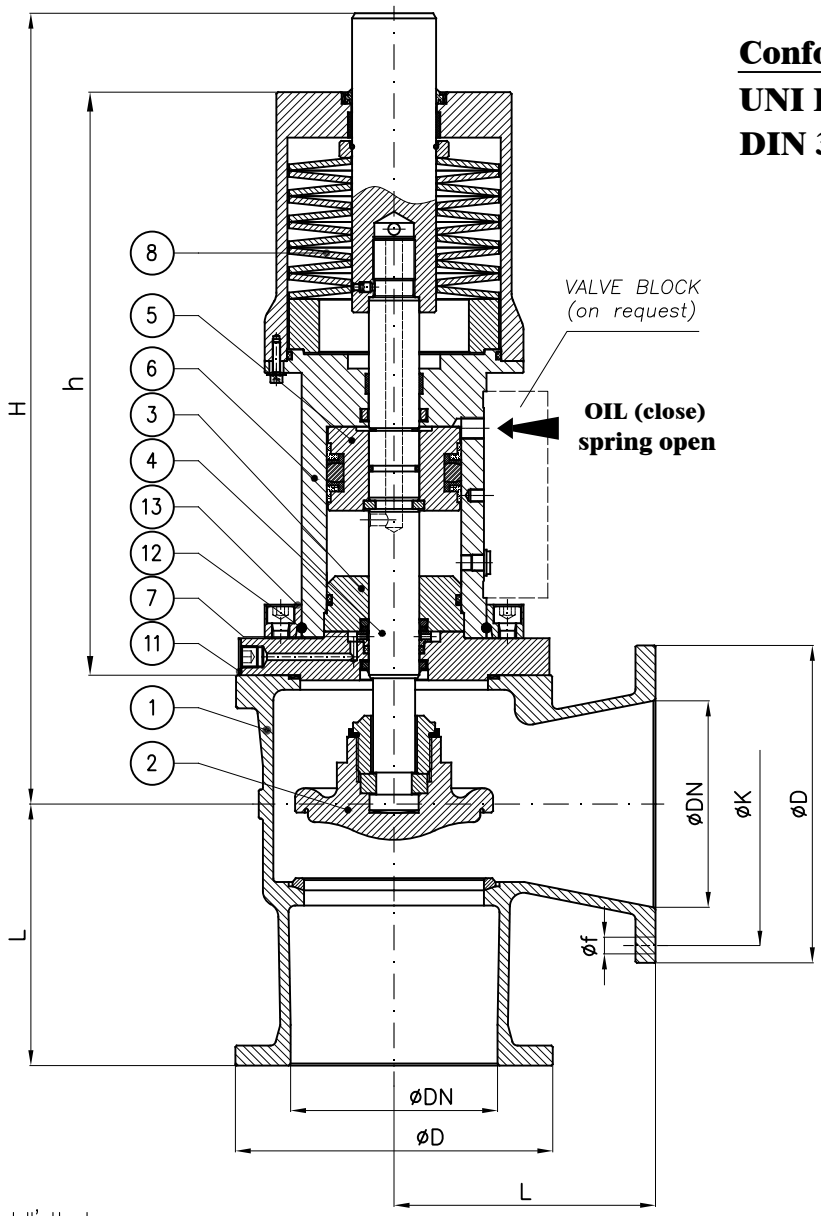

N.B.: Il dimensionamento e quindi anche l'ingombro dell'attuatore è funzione dei seguenti dati che devono sempre essere forniti:

- Pressione esercizio della valvola
- pressione olio all'attuatore
- Servizio

Note.: The size and so the overall dimension of the actuator depends by the following informations that should always be provided:

- *Valve's working pressure*
- *Oil pressure to actuator*
- *Service*

					PN10DIN				PN16			
DN	h (~)	H (~)	L	Weight (Kg)	øD	K	f	Holes NO. f	øD	K	f	Holes NO. f
32	305	385	105		140	100	18	4	140	100	18	4
40	305	385	115		150	110	18	4	150	110	18	4
50	295	385	125		165	125	18	4	165	125	18	4
65	285	385	145		185	145	18	4	185	145	18	4
80	335	435	155		200	160	18	8	200	160	18	8
100	320	435	175		220	180	18	8	220	180	18	8
125	420	550	200		250	210	18	8	250	210	18	8
150	485	630	225		285	240	22	8	285	240	22	8
200	485	675	275		340	295	22	8	340	295	22	12
250	565	725	325		395	350	22	12	405	355	26	12

Combinazione materiali standard – Standard materials Combination

		G/316	G/B
ITEM	DENOMINAZIONE DENOMINATION	MATERIALE MATERIAL	MATERIALE MATERIAL
01	Body	Cast iron UNI EN1561 EN-GJL-250	Cast iron UNI EN1561 EN-GJL-250
02	Disc (≤ DN80)	Stainless steel AISI316 UNI EN10088	Bronze UNI EN1982 G-CuSn5Zn5Pb5
02	Disc (≥ DN100)	Cast steel GP240-GH UNI EN10213 plus AISI316 facing welding	Bronze UNI EN1982 G-CuSn5Zn5Pb5
03	Inner head flange	Cast iron UNI EN1561 EN-GJL-250	Cast iron UNI EN1561 EN-GJL-250
04	Stem	Stainless steel AISI316 UNI EN10088	Stainless steel AISI316 UNI EN10088
05	Piston	Steel 9SMnPb28 UNI EN10087	Steel 9SMnPb28 UNI EN10087
06	Housing assembly	Fe52.2 GALVANIZED	Fe52.2 GALVANIZED
07	Back rod	Steel 9SMnPb28 UNI EN10087	Steel 9SMnPb28 UNI EN10087
08	Disk spring	Steel UNI EN10270	Steel UNI EN10270
09	Proximity switch	CEED BG12/2PF2 PNP CEOM E2FX2E2G NPN	CEED BG12/2PF2 PNP CEOM E2FX2E2G NPN
10	Indicator washer	Steel 9SMnPb28 UNI EN10087	Steel 9SMnPb28 UNI EN10087
11	Flange	Steel UNI C40	Steel UNI C40
12	Snap ring ø5	Stainless steel AISI316 UNI EN10088	Stainless steel AISI316 UNI EN10088
13	Collar	Fe52.2 GALVANIZED	Fe52.2 GALVANIZED
14	Shield	Stainless steel AISI316 UNI EN10088	Stainless steel AISI316 UNI EN10088

Nota: Combinazioni materiali non standard a richiesta
Note: Non standard materials combinations on request

Valvole ad angolo retto - serie pesante PN10DIN-PN16
Angle valves angle type - heavy class NP10DIN-NP16

Tab.127GS

Conform to:
UNI EN1092
DIN 3202

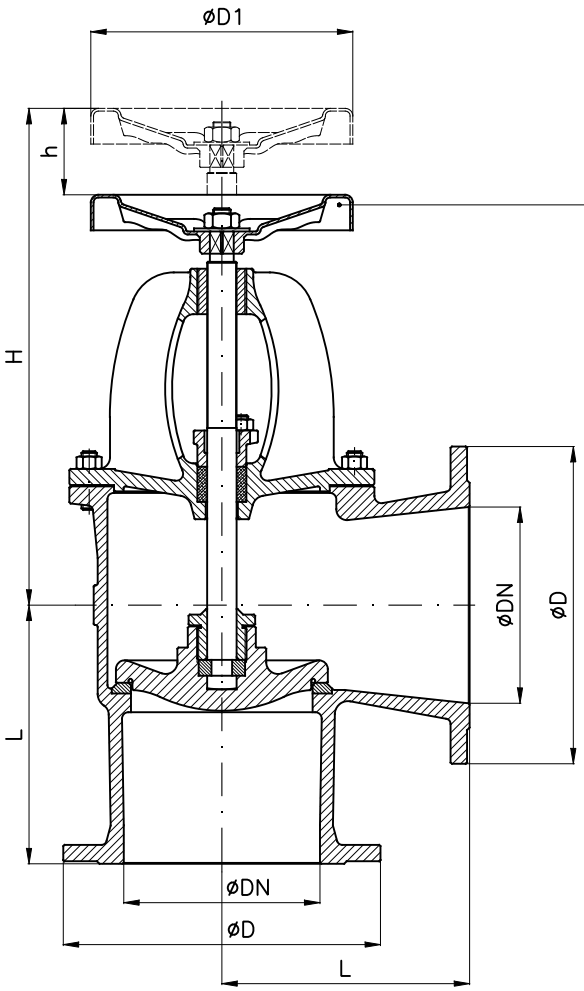

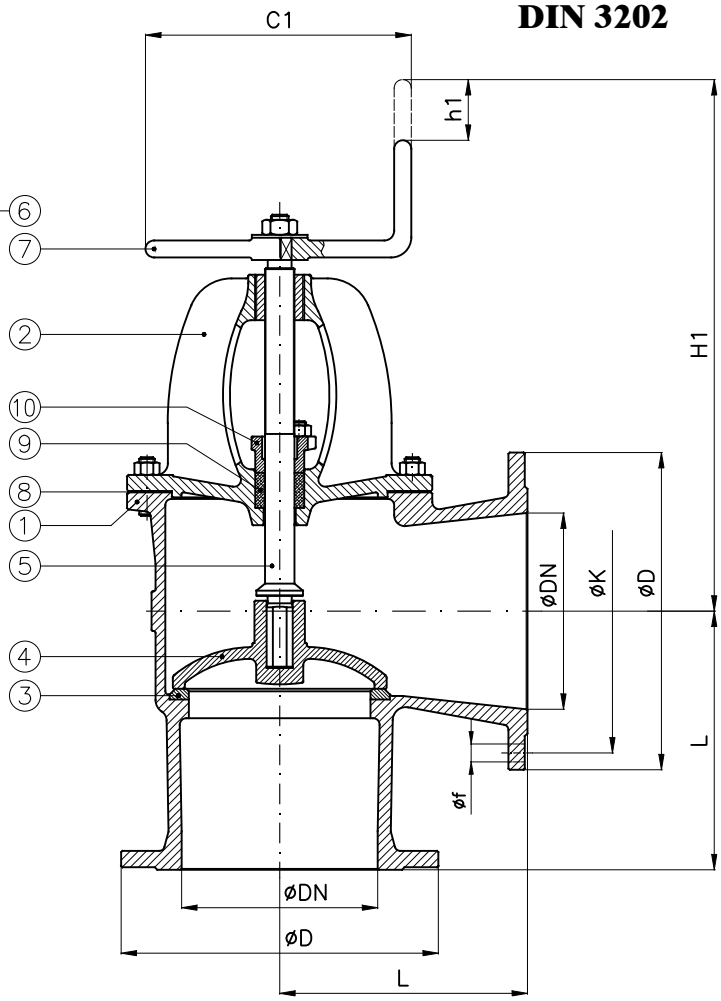

Tab.127GS-SDSL TYPE	PN10DIN	PN16
comandata (SDSL) with fixed disc (SDSL)	-	UNI 3420 UNAV 8426 NE 402130

Tab.127GS-SDNR TYPE	PN10DIN	PN16
semiautomatica (SDNR) with loose disc (SDNR)	-	UNI 3424 UNAV 8428 NE 404130

									PN10DIN				PN16			
DN	C1	D1	H SDSL (~)	h SDSL	H1 SDNR (~)	h1 SDNR	L	Weight (Kg)	D	K	f	Holes NO. f	D	K	f	Holes NO. f
15	100	100	200	12	230	8	85	6	95	65	14	4	95	65	14	4
20	100	100	200	12	230	8	85	6	105	75	14	4	105	75	14	4
25	100	100	210	14	230	9	90	8	115	85	14	4	115	85	14	4
32	125	125	220	17	250	10	105	11.5	140	100	18	4	140	100	18	4
40	125	125	230	20	255	12	115	12	150	110	18	4	150	110	18	4
50	125	125	235	24	255	14	125	14	165	125	18	4	165	125	18	4
65	175	175	290	32	315	18	145	21	185	145	18	4	185	145	18	4
80	175	175	305	35	330	20	155	24	200	160	18	8	200	160	18	8
100	200	200	350	45	350	28	175	37	220	180	18	8	220	180	18	8
125	225	225	380	54	390	32	200	52	250	210	18	8	250	210	18	8
150	225	300	400	62	415	38	225	70	285	240	22	8	285	240	22	8
175	250	400	470	74	500	45	250	90	315	270	22	8	315	270	22	8
200	250	400	530	82	520	50	275	130	340	295	22	8	340	295	22	12
250	300	500	580	100	570	66	325	168	395	350	22	12	405	355	26	12
300	425	575	690	118	690	85	375	232	445	400	22	12	460	410	26	12
350	500			130		90	400	285	505	460	22	16	520	470	26	16
400	575			135		100	450	409	565	515	26	16	580	525	30	16
450	650			160		115	500	543	615	565	26	20	640	585	30	20
500				180		130	535	850	670	620	26	20	715	650	33	20
600				215		160	550		780	725	30	20	840	770	36	20

Combinazione materiali standard – Standard materials Combination

ITEM	DENOMINAZIONE DENOMINATION	GS/316 MATERIALE MATERIAL	GS/B MATERIALE MATERIAL
01	Body	Nodular cast iron EN-GJS-400-15U UNI EN1563	Nodular cast iron EN-GJS-400-15U UNI EN1563
02	Bonnet	Nodular cast iron EN-GJS-400-15U UNI EN1563	Nodular cast iron EN-GJS-400-15U UNI EN1563
03	Body seat	Stainless steel AISI316 UNI EN10088	Stainless steel AISI316 UNI EN10088
04	Disc (≤ DN80)	Stainless steel AISI316 UNI EN10088	Bronze UNI EN1982 G-CuSn5Zn5Pb5
04	Disc (≥ DN100)	Cast steel GP240-GH UNI EN10213 plus AISI316 facing welding	Bronze UNI EN1982 G-CuSn5Zn5Pb5
05	Stem	Stainless steel AISI316 UNI EN10088	Brass CW617N (OT58)
06	Handwheel	Sheet of carbon steel	Sheet of carbon steel
07	Handle	Steel A37 UNI EN10217-1	Steel A37 UNI EN10217-1
08	Gasket	Planiflex KG carbo/C PF81	Planiflex KG carbo/C PF81
09	Packing	Carbograph GR8800	Carbograph GR8800
10	Gland bushing	Bronze UNI EN1982 G-CuSn5Zn5Pb5	Bronze UNI EN1982 G-CuSn5Zn5Pb5

Nota: Combinazioni materiali non standard a richiesta
Note: Non standard materials combinations on request

Valvole ad angolo retto PN10DIN-PN16 con attuatore idraulico doppio effetto
Angle valves NP10DIN-NP16 with hydraulic double acting actuator

Tab.127GS-DA

(Ex Tab. 129/1-DA)

Conform to:

UNI EN1092
DIN 3202

Esecuzione 01
con otturatore Com.

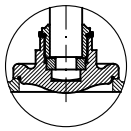

Execution 01
with SDSL disc

Esecuzione 02
con otturatore Aut.

Execution 02
with SDNR disc

con Proximity limit switch (a richiesta)
with Proximity limit switch (on request)

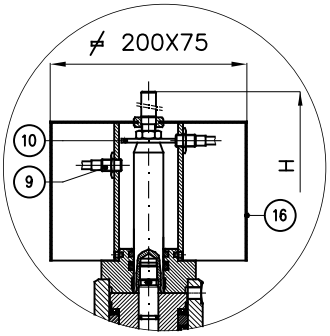

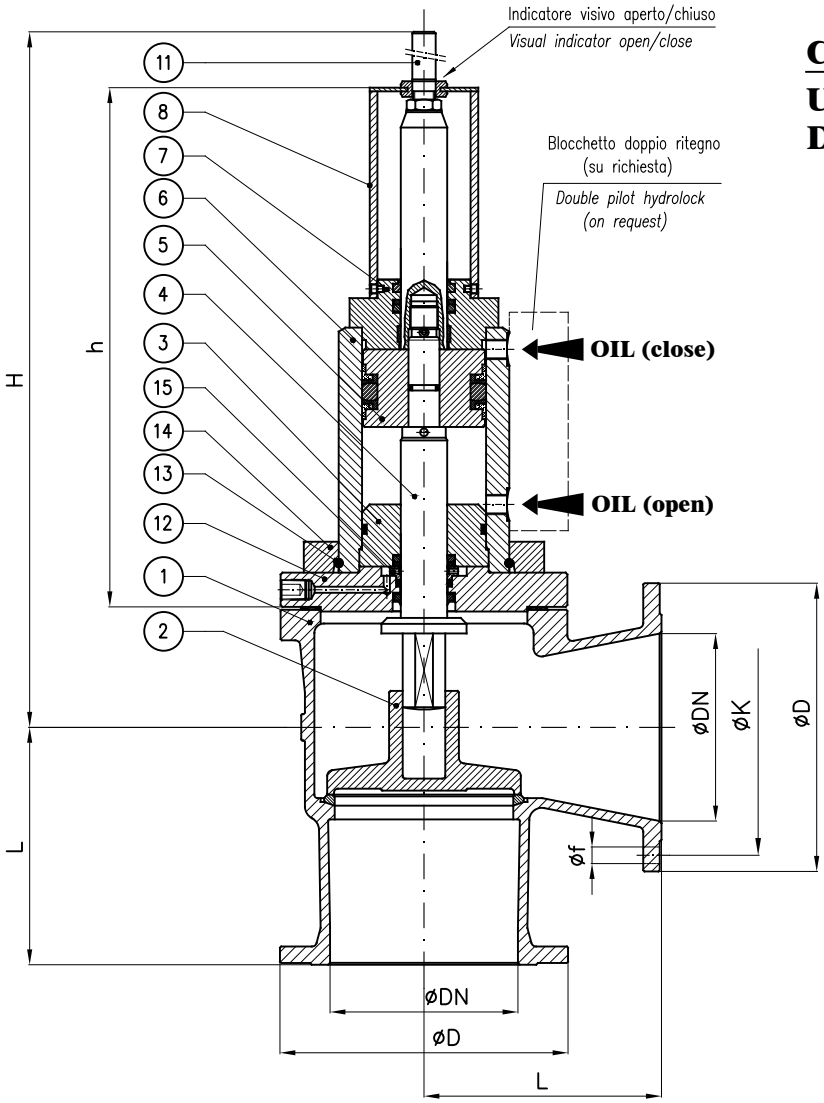

N.B.: Il dimensionamento e quindi anche l'ingombro dell'attuatore è funzione dei seguenti dati che devono sempre essere forniti:

- Pressione esercizio della valvola
- pressione olio all'attuatore
- Servizio

Note.: The size and so the overall dimension of the actuator depends by the following informations that should always be provided:

- *Valve's working pressure*
- *Oil pressure to actuator*
- *Service*

					PN10DIN				PN16			
DN	h (~)	H (~)	L	Weight (Kg)	øD	K	f	Holes NO. f	øD	K	f	Holes NO. f
20	210	265	85		105	75	14	4	105	75	14	4
25	210	270	90		115	85	14	4	115	85	14	4
32	335	415	105		140	100	18	4	140	100	18	4
40	335	420	115		150	110	18	4	150	110	18	4
50	320	420	125		165	125	18	4	165	125	18	4
65	315	420	145		185	145	18	4	185	145	18	4
80	340	445	155		200	160	18	8	200	160	18	8
100	340	455	175		220	180	18	8	220	180	18	8
125	360	495	200		250	210	18	8	250	210	18	8
150	360	505	225		285	240	22	8	285	240	22	8
200	440	655	275		340	295	22	8	340	295	22	12
250	440	660	325		395	350	22	12	405	355	26	12
300	525	850	375		445	400	22	12	460	410	26	12

Combinazione materiali standard – Standard materials Combination

		GS/316	GS/B
ITEM	DENOMINAZIONE DENOMINATION	MATERIALE MATERIAL	MATERIALE MATERIAL
01	Body	Nodular cast iron EN-GJS-400-15U UNI EN1563	Nodular cast iron EN-GJS-400-15U UNI EN1563
02	Disc (≤ DN80)	Stainless steel AISI316 UNI EN10088	Bronze UNI EN1982 G-CuSn5Zn5Pb5
02	Disc (≥ DN100)	Cast steel GP240-GH UNI EN10213 plus AISI316 facing welding	Bronze UNI EN1982 G-CuSn5Zn5Pb5
03	Inner head flange	Cast iron UNI EN1561 EN-GJL-250	Cast iron UNI EN1561 EN-GJL-250
04	Stem	Stainless steel AISI316 UNI EN10088	Stainless steel AISI316 UNI EN10088
05	Piston	Steel 9SMnPb28 UNI EN10087	Steel 9SMnPb28 UNI EN10087
06	Housing welded assembly	Fe52.2 GALVANIZED	Fe52.2 GALVANIZED
07	Head flange	Steel UNI C40	Steel UNI C40
08	Proximity switch support	Fe37 GALVANIZED	Fe37 GALVANIZED
09	Proximity switch	CEED BG12/2PF2 PNP CEOM E2FX2E2G NPN	CEED BG12/2PF2 PNP CEOM E2FX2E2G NPN
10	Indicator washer	Steel 9SMnPb28 UNI EN10087	Steel 9SMnPb28 UNI EN10087
11	Index open/close	Brass CW617N (OT58)	Brass CW617N (OT58)
12	Flange	Steel UNI C40	Steel UNI C40
13	Snap ring ø5	Stainless steel AISI316 UNI EN10088	Stainless steel AISI316 UNI EN10088
14	Collar	Fe52.2 GALVANIZED	Fe52.2 GALVANIZED
15	Back rod	Steel 9SMnPb28 UNI EN10087	Steel 9SMnPb28 UNI EN10087
16	Shield	Stainless steel AISI316 UNI EN10088	Stainless steel AISI316 UNI EN10088

Nota: Combinazioni materiali non standard a richiesta
Note: Non standard materials combinations on request

Valvole ad angolo retto PN10DIN-PN16 con attuatore idraulico semplice effetto normalmente chiuso (FC)

Angle valves NP10DIN-NP16 with hydraulic single acting actuator fail close (FC)

Tab.127GS-SR-FC

(Ex Tab. 129/1-SR-FC)

Conform to:

UNI EN1092
DIN 3202

Esecuzione 01
con otturatore Com.

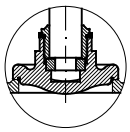

Execution 01
with SDSL disc

Esecuzione 02
con otturatore Aut.

Execution 02
with SDNR disc

con Proximity limit switch (a richiesta)
with Proximity limit switch (on request)

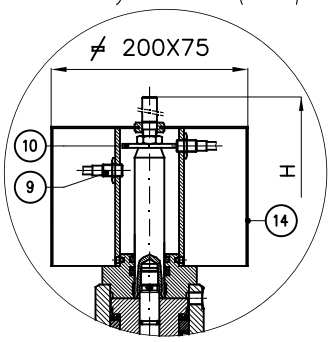

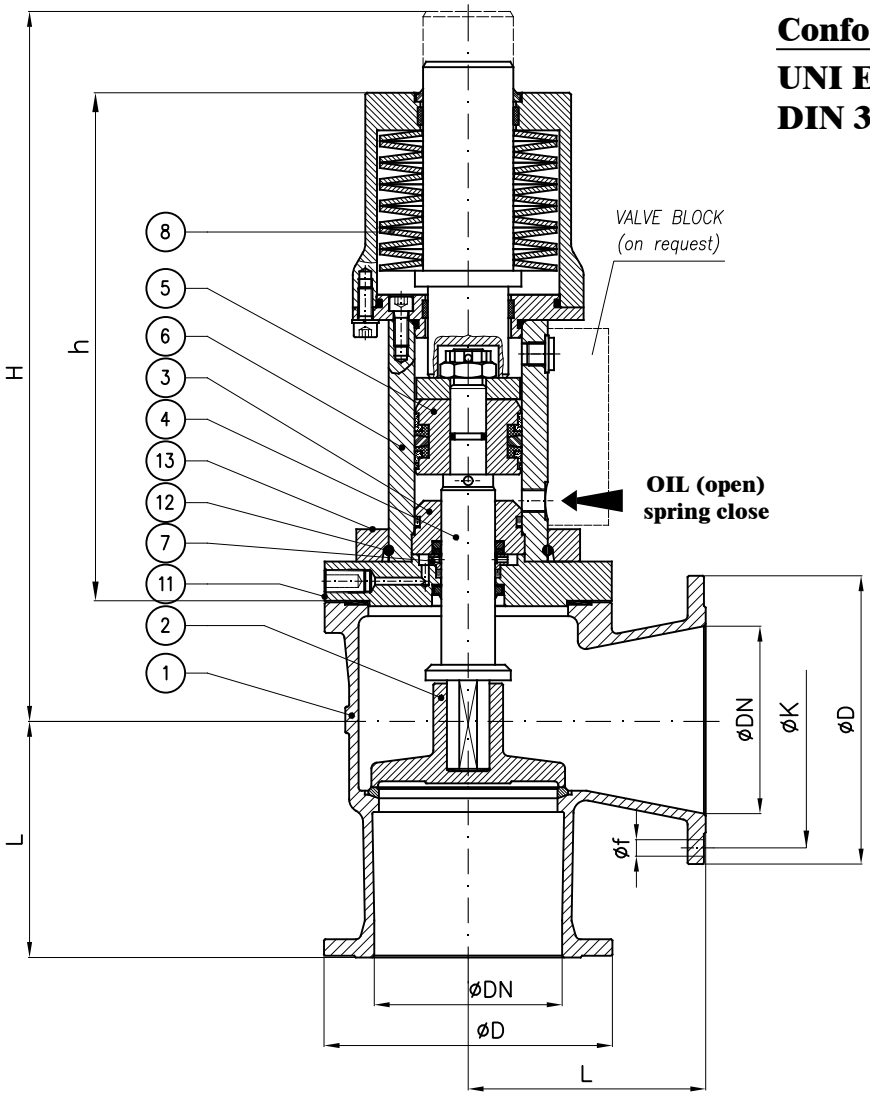

N.B.: Il dimensionamento e quindi anche l'ingombro dell'attuatore è funzione dei seguenti dati che devono sempre essere forniti:

- Pressione esercizio della valvola
- pressione olio all'attuatore
- Servizio

Note.: The size and so the overall dimension of the actuator depends by the following informations that should always be provided:

- *Valve's working pressure*
- *Oil pressure to actuator*
- *Service*

					PN10DIN				PN16			
DN	h (~)	H (~)	L	Weight (Kg)	øD	K	f	Holes NO. f	øD	K	f	Holes NO. f
32	305	385	105		140	100	18	4	140	100	18	4
40	305	385	115		150	110	18	4	150	110	18	4
50	295	385	125		165	125	18	4	165	125	18	4
65	285	385	145		185	145	18	4	185	145	18	4
80	335	435	155		200	160	18	8	200	160	18	8
100	320	435	175		220	180	18	8	220	180	18	8
125	420	550	200		250	210	18	8	250	210	18	8
150	485	630	225		285	240	22	8	285	240	22	8
200	485	675	275		340	295	22	8	340	295	22	12
250	565	725	325		395	350	22	12	405	355	26	12

Combinazione materiali standard – Standard materials Combination			
		GS/316	GS/B
ITEM	DENOMINAZIONE DENOMINATION	MATERIALE MATERIAL	MATERIALE MATERIAL
01	Body	Nodular cast iron EN-GJS-400-15U UNI EN1563	Nodular cast iron EN-GJS-400-15U UNI EN1563
02	Disc (≤ DN80)	Stainless steel AISI316 UNI EN10088	Bronze UNI EN1982 G-CuSn5Zn5Pb5
02	Disc (≥ DN100)	Cast steel GP240-GH UNI EN10213 plus AISI316 facing welding	Bronze UNI EN1982 G-CuSn5Zn5Pb5
03	Inner head flange	Cast iron UNI EN1561 EN-GJL-250	Cast iron UNI EN1561 EN-GJL-250
04	Stem	Stainless steel AISI316 UNI EN10088	Stainless steel AISI316 UNI EN10088
05	Piston	Steel 9SMnPb28 UNI EN10087	Steel 9SMnPb28 UNI EN10087
06	Housing assembly	Fe52.2 GALVANIZED	Fe52.2 GALVANIZED
07	Back rod	Steel 9SMnPb28 UNI EN10087	Steel 9SMnPb28 UNI EN10087
08	Disk spring	Steel UNI EN10270	Steel UNI EN10270
09	Proximity switch	CEED BG12/2PF2 PNP CEOM E2FX2E2G NPN	CEED BG12/2PF2 PNP CEOM E2FX2E2G NPN
10	Indicator washer	Steel 9SMnPb28 UNI EN10087	Steel 9SMnPb28 UNI EN10087
11	Flange	Steel UNI C40	Steel UNI C40
12	Snap ring ø5	Stainless steel AISI316 UNI EN10088	Stainless steel AISI316 UNI EN10088
13	Collar	Fe52.2 GALVANIZED	Fe52.2 GALVANIZED
14	Shield	Stainless steel AISI316 UNI EN10088	Stainless steel AISI316 UNI EN10088
Nota: Combinazioni materiali non standard a richiesta Note: Non standard materials combinations on request			

Valvole ad angolo retto PN10DIN-PN16 con attuatore idraulico semplice effetto normalmente aperto (FO)

Angle valves NP10DIN-NP16 with hydraulic single acting actuator fail open (FO)

Tab.127GS-SR-FO

(Ex Tab. 129/1-SR-FO)

Conform to:

UNI EN1092
DIN 3202

Esecuzione 01
con otturatore Com.

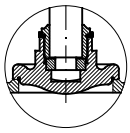

Execution 01
with SDSL disc

Esecuzione 02
con otturatore Aut.

Execution 02
with SDNR disc

con Proximity limit switch (a richiesta)
with Proximity limit switch (on request)

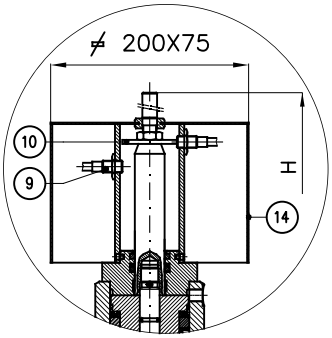

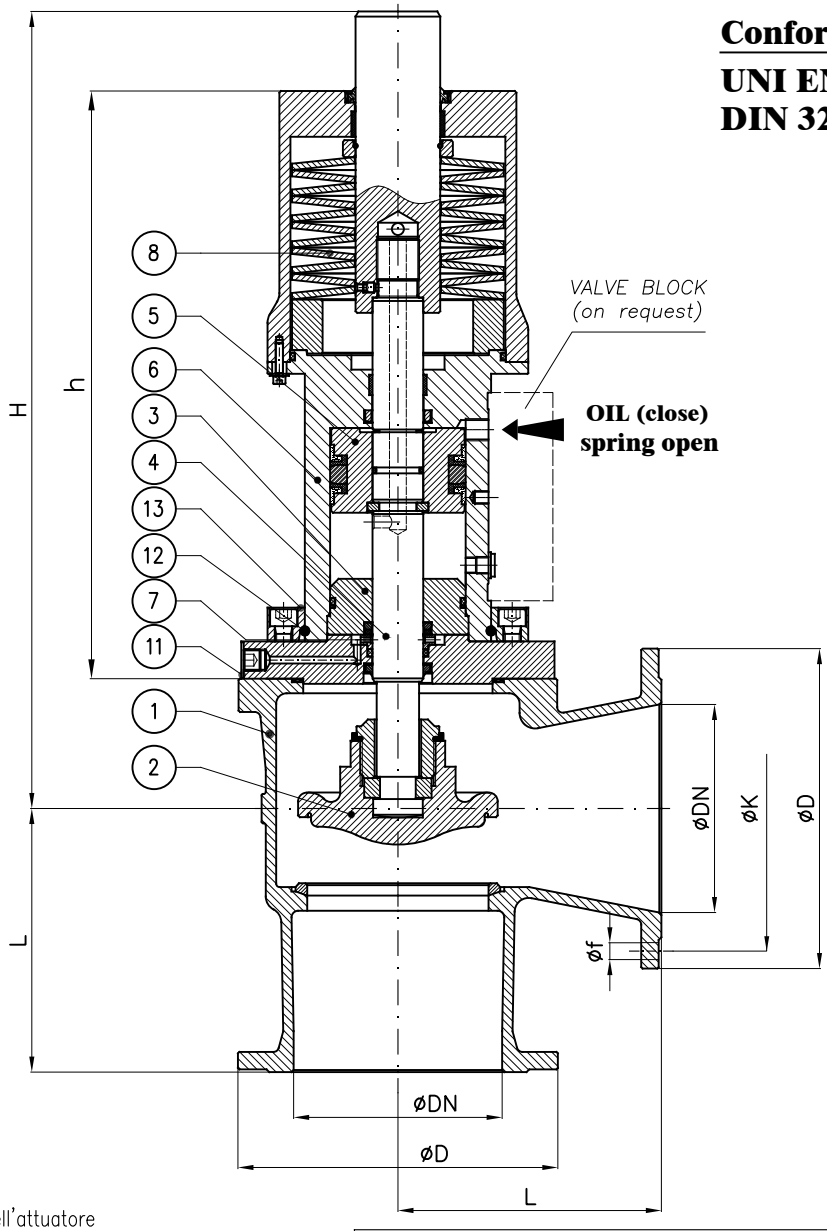

N.B.: Il dimensionamento e quindi anche l'ingombro dell'attuatore è funzione dei seguenti dati che devono sempre essere forniti:

- Pressione esercizio della valvola
- pressione olio all'attuatore
- Servizio

Note.: The size and so the overall dimension of the actuator depends by the following informations that should always be provided:

- *Valve's working pressure*
- *Oil pressure to actuator*
- *Service*

					PN10DIN				PN16			
DN	h (~)	H (~)	L	Weight (Kg)	øD	K	f	Holes NO. f	øD	K	f	Holes NO. f
32	305	385	105		140	100	18	4	140	100	18	4
40	305	385	115		150	110	18	4	150	110	18	4
50	295	385	125		165	125	18	4	165	125	18	4
65	285	385	145		185	145	18	4	185	145	18	4
80	335	435	155		200	160	18	8	200	160	18	8
100	320	435	175		220	180	18	8	220	180	18	8
125	420	550	200		250	210	18	8	250	210	18	8
150	485	630	225		285	240	22	8	285	240	22	8
200	485	675	275		340	295	22	8	340	295	22	12
250	565	725	325		395	350	22	12	405	355	26	12

Combinazione materiali standard – Standard materials Combination			
		GS/316	GS/B
ITEM	DENOMINAZIONE DENOMINATION	MATERIALE MATERIAL	MATERIALE MATERIAL
01	Body	Nodular cast iron EN-GJS-400-15U UNI EN1563	Nodular cast iron EN-GJS-400-15U UNI EN1563
02	Disc (≤ DN80)	Stainless steel AISI316 UNI EN10088	Bronze UNI EN1982 G-CuSn5Zn5Pb5
02	Disc (≥ DN100)	Cast steel GP240-GH UNI EN10213 plus AISI316 facing welding	Bronze UNI EN1982 G-CuSn5Zn5Pb5
03	Inner head flange	Cast iron UNI EN1561 EN-GJL-250	Cast iron UNI EN1561 EN-GJL-250
04	Stem	Stainless steel AISI316 UNI EN10088	Stainless steel AISI316 UNI EN10088
05	Piston	Steel 9SMnPb28 UNI EN10087	Steel 9SMnPb28 UNI EN10087
06	Housing assembly	Fe52.2 GALVANIZED	Fe52.2 GALVANIZED
07	Back rod	Steel 9SMnPb28 UNI EN10087	Steel 9SMnPb28 UNI EN10087
08	Disk spring	Steel UNI EN10270	Steel UNI EN10270
09	Proximity switch	CEED BG12/2PF2 PNP CEOM E2FX2E2G NPN	CEED BG12/2PF2 PNP CEOM E2FX2E2G NPN
10	Indicator washer	Steel 9SMnPb28 UNI EN10087	Steel 9SMnPb28 UNI EN10087
11	Flange	Steel UNI C40	Steel UNI C40
12	Snap ring ø5	Stainless steel AISI316 UNI EN10088	Stainless steel AISI316 UNI EN10088
13	Collar	Fe52.2 GALVANIZED	Fe52.2 GALVANIZED
14	Shield	Stainless steel AISI316 UNI EN10088	Stainless steel AISI316 UNI EN10088

Nota: Combinazioni materiali non standard a richiesta
Note: Non standard materials combinations on request

Valvole ad angolo retto - serie PN40
Angle valves - NP40 class

Tab.184AR

Conform to:
UNI EN1092
DIN 3202

RF FLANGES: A
FF FLANGES: B

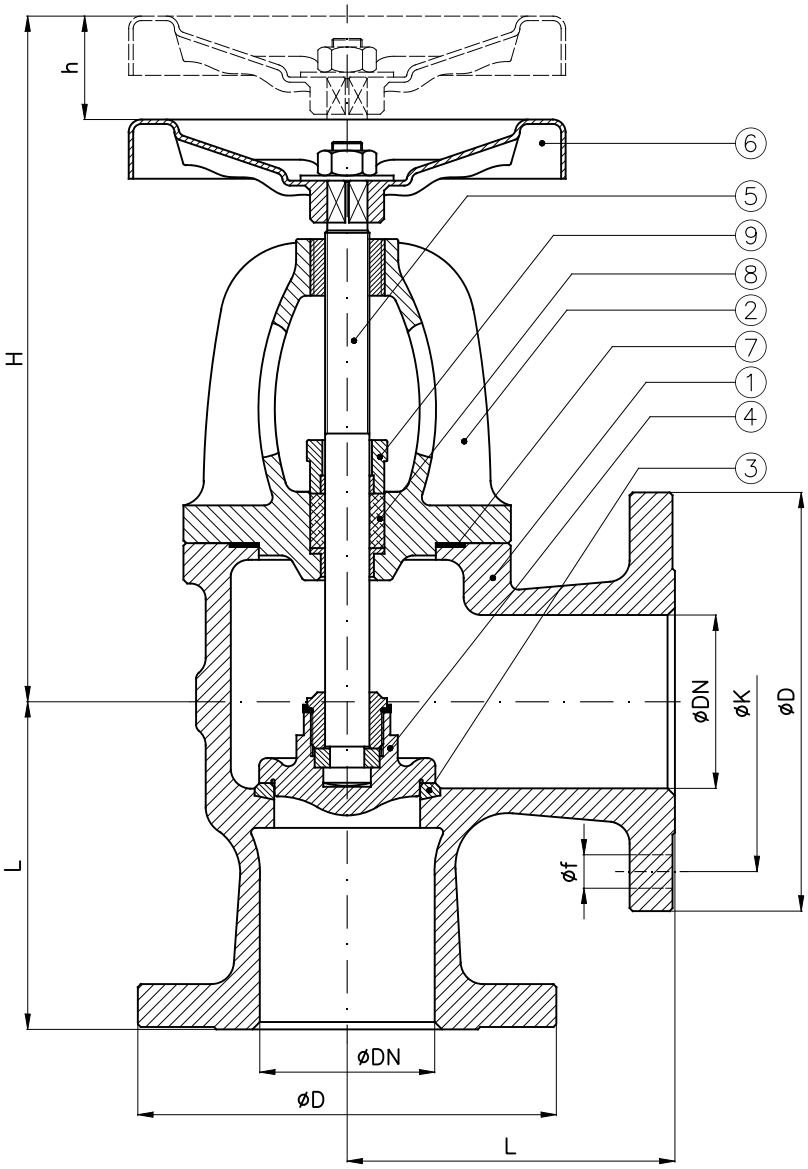

Esecuzioni a richiesta
On request executions

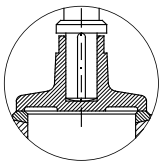

1) Otturatore semiautomatico
SDNR disc

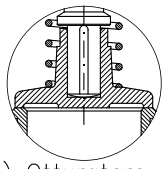

2) Otturatore semiautomatico con molla
SDNR disc with spring loaded

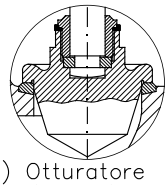

3) Otturatore di regolazione tronco conico
Tapered frustum regulating disc

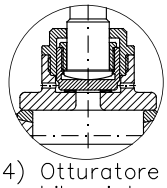

4) Otturatore bilanciato
Balanced disc

DN	H (~)	h (~)	L	D	K	f	Holes NO. f	Weight (Kg)
15	215	10	85	95	65	14	4	5.3
20	220	10	85	105	75	14	4	6
25	230	15	90	115	85	14	4	7
32	245	20	105	140	100	18	4	9
40	280	25	115	150	110	18	4	12
50	290	30	125	165	125	18	4	15
65	325	35	145	185	145	18	8	25
80	355	35	155	200	160	18	8	28
100	380	40	175	235	190	22	8	45
125	420	50	200	270	220	26	8	63
150	460	65	225	300	250	26	8	70
175	495	70	250	350	295	29	12	129
200	575	80	275	375	320	29	12	145
250	655	85	325	450	385	33	12	
300	770	100	375	515	450	33	16	

Combinazione materiali standard – Standard materials Combination

		A/316	A/420	CF8M/316	B/316	B/B
ITEM	DENOMINAZIONE DENOMINATION	MATERIALE MATERIAL	MATERIALE MATERIAL	MATERIALE MATERIAL	MATERIALE MATERIAL	MATERIALE MATERIAL
01	Body	Cast steel GP240-GH UNI EN10213	Cast steel GP240-GH UNI EN10213	Stainless steel CF8M ASTM A351	Bronze UNI EN1982 G-CuSn5Zn5Pb5	Bronze UNI EN1982 G-CuSn5Zn5Pb5
02	Bonnet	Cast steel GP240-GH UNI EN10213	Cast steel GP240-GH UNI EN10213	Stainless steel CF8M ASTM A351	Bronze UNI EN1982 G-CuSn5Zn5Pb5	Bronze UNI EN1982 G-CuSn5Zn5Pb5
03	Body seat	Stainless steel AISI316 UNI EN10088	Stainless steel AISI420 UNI EN10088	Stainless steel AISI316 UNI EN10088	Bronze UNI EN1982 G-CuSn5Zn5Pb5	Bronze UNI EN1982 G-CuSn5Zn5Pb5
04	Disc (≤ DN80)	Stainless steel AISI316 UNI EN10088	Stainless steel AISI420 UNI EN10088	Stainless steel AISI316 UNI EN10088	Stainless steel AISI316 UNI EN10088	Bronze UNI EN1982 G-CuSn5Zn5Pb5
04	Disc (≥ DN100)	Cast steel GP240-GH UNI EN10213 plus AISI316 facing welding	Cast steel GP240-GH UNI EN10213 plus AISI308 facing welding	Stainless steel CF8M ASTM A351	Stainless steel CF8M ASTM A351	Bronze UNI EN1982 G-CuSn5Zn5Pb5
05	Stem	Stainless steel AISI316 UNI EN10088	Stainless steel AISI420 UNI EN10088	Stainless steel AISI316 UNI EN10088	Stainless steel AISI316 UNI EN10088	Brass CW617N (OT58)
06	Handwheel	Sheet of carbon steel	Sheet of carbon steel	Sheet of carbon steel	Sheet of carbon steel	Sheet of carbon steel
07	Gasket	Planiflex KG carbo/C PF81	Planiflex KG carbo/C PF81	Planiflex KG carbo/C PF81	Planiflex KG carbo/C PF81	Planiflex KG carbo/C PF81
08	Packing	Carbograph GR8800	Carbograph GR8800	Carbograph GR8800	Carbograph GR8800	Carbograph GR8800
09	Gland bushing	Steel Fe360B (S235JRC) UNI EN10025	Steel Fe360B (S235JRC) UNI EN10025	Stainless steel AISI316 UNI EN10088	Brass CW509L (OT60)	Brass CW509L (OT60)

Nota: Combinazioni materiali non standard a richiesta
Note: Non standard materials combinations on request

Valvole ad angolo retto sede metallica o teflon PN16
Angle valves metal sealing seat or PTFE NP16

Art.4

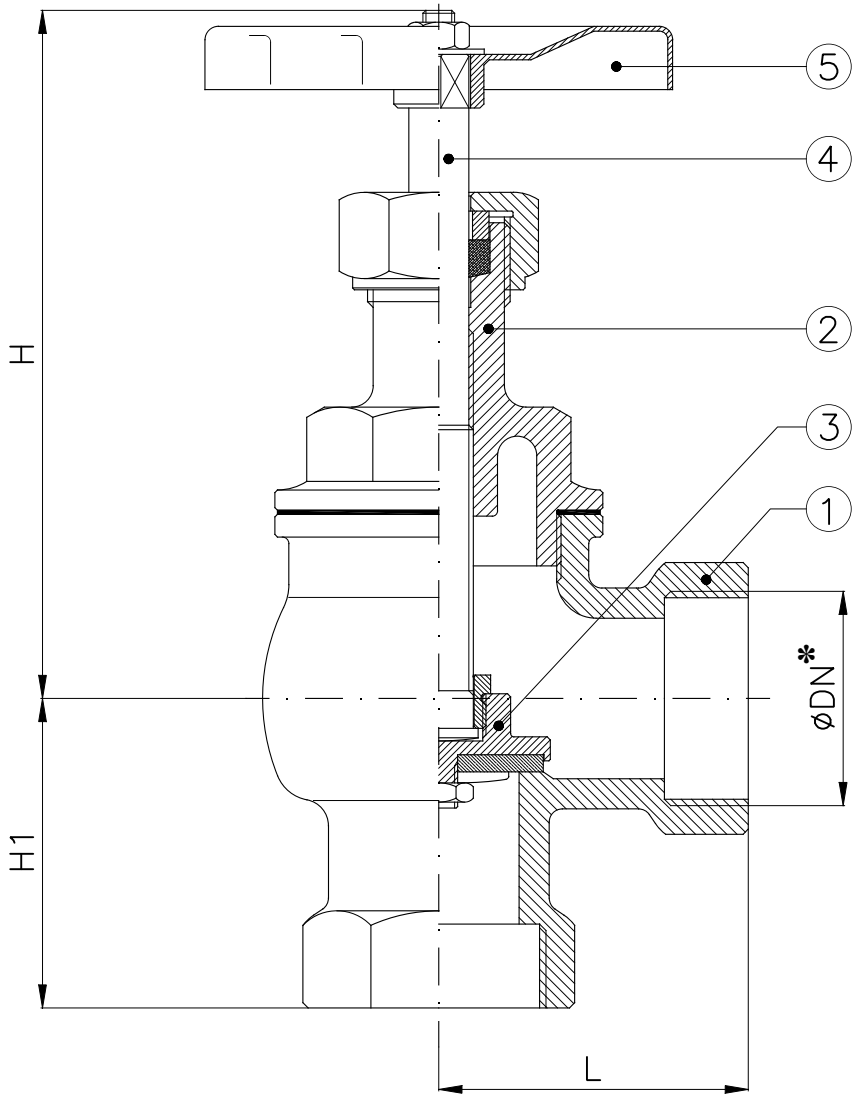

✻: Filettatura GAS
✻: *BSPP threaded*

DN	H	H1	L	Weight (Kg)
1/4"	77	24	30	0.26
3/8"	72	29	30	0.3
1/2"	77	28	30	0.3
3/4"	87	32	36	0.5
1"	97	38	47	0.85
1"1/4	110	44	57	1.2
1"1/2	124	46	62	1.5
2"	132	55	72	2.5
2"1/2	185	71	80	4.7
3"	210	73	92	6.0
4"	230	85	110	9.8

Combinazione materiali standard – Standard materials Combination		
		B/O
ITEM	DENOMINAZIONE DENOMINATION	MATERIALE MATERIAL
01	Body	Bronze UNI EN1982 G-CuSn5Zn5Pb5
02	Bonnet	Brass CW617N (OT58)
03	Disc	Brass CW617N (OT58)
04	Stem	Brass CW617N (OT58)
05	Handwheel	Aluminium

Nota: Combinazioni materiali non standard a richiesta
Note: Non standard materials combinations on request

Valvole ad angolo retto sede metallica o teflon PN16
Angle valves, metal sealing seat or PTFE NP16

Art.6

Conform to:
UNI EN1092

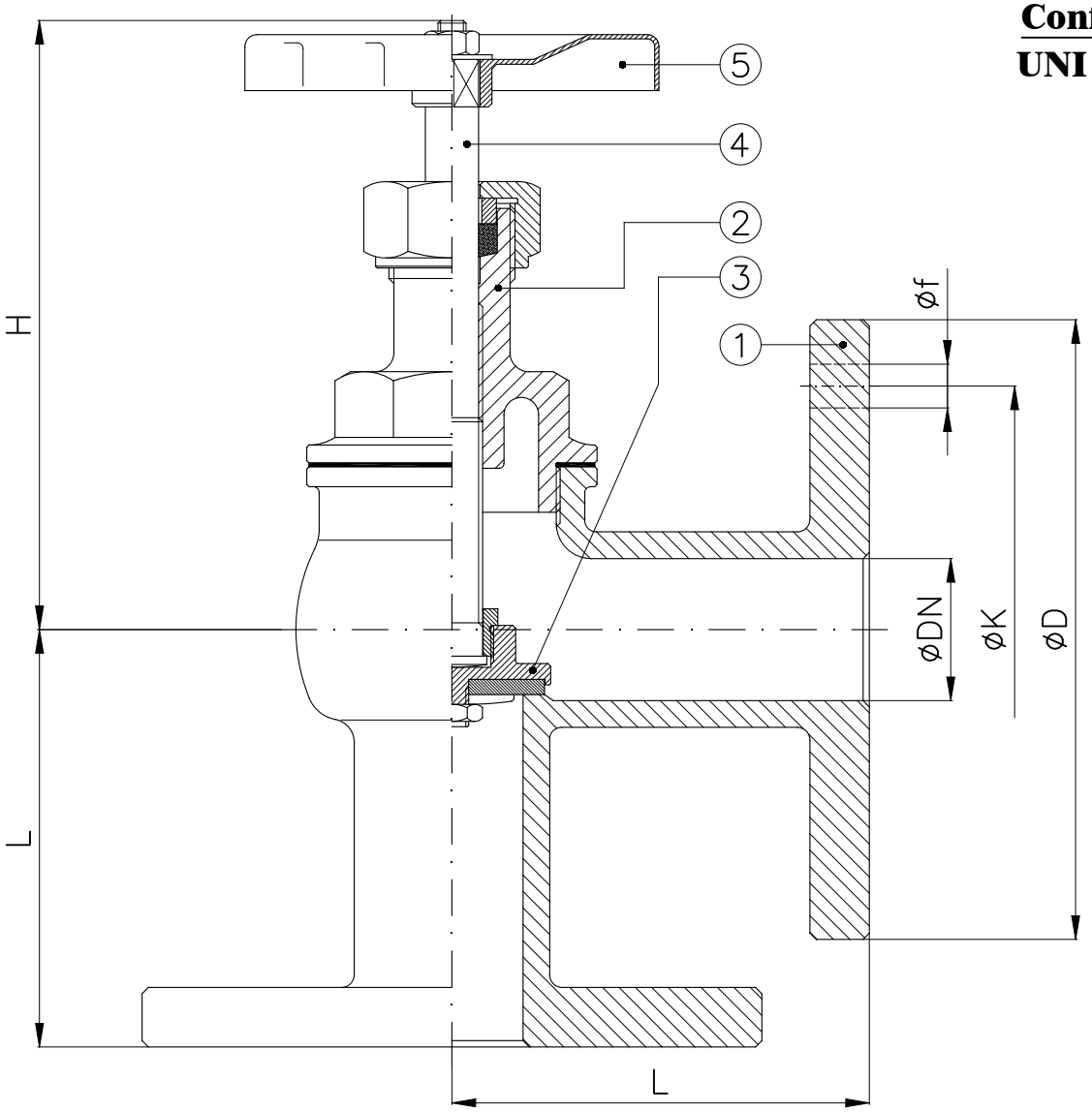

DN	H	L	D	K	f	Holes No. f	Weight (Kg)
15	75	60	95	65	14	4	1.8
20	85	65	105	75	14	4	2.2
25	105	72	115	85	14	4	3.1
32	110	85	140	100	18	4	4.5
40	145	90	150	110	18	4	5.2
50	160	105	165	125	18	4	7.5
65	190	110	185	145	18	4	10.7
80	225	115	200	160	18	8	12.8
100	220	140	220	180	18	8	16

Combinazione materiali standard – Standard materials Combination		
		B/O
ITEM	DENOMINAZIONE DENOMINATION	MATERIALE MATERIAL
01	Body	Bronze UNI EN1982 G-CuSn5Zn5Pb5
02	Bonnet	Brass CW617N (OT58)
03	Disc	Brass CW617N (OT58)
04	Stem	Brass CW617N (OT58)
05	Handwheel	Aluminium
Nota: Combinazioni materiali non standard a richiesta Note: Non standard materials combinations on request		

Valvole ad angolo retto - serie pesante PN6 con motore elettrico
Globe valves angle type - heavy class NP6 with electric motor

Tab.123-ME-PSL

Conform to:
UNI EN1092
DIN 3202

Esecuzione comandata
SDSL type

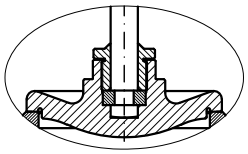

Esecuzione semiautomatica
SDNR type

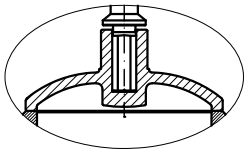

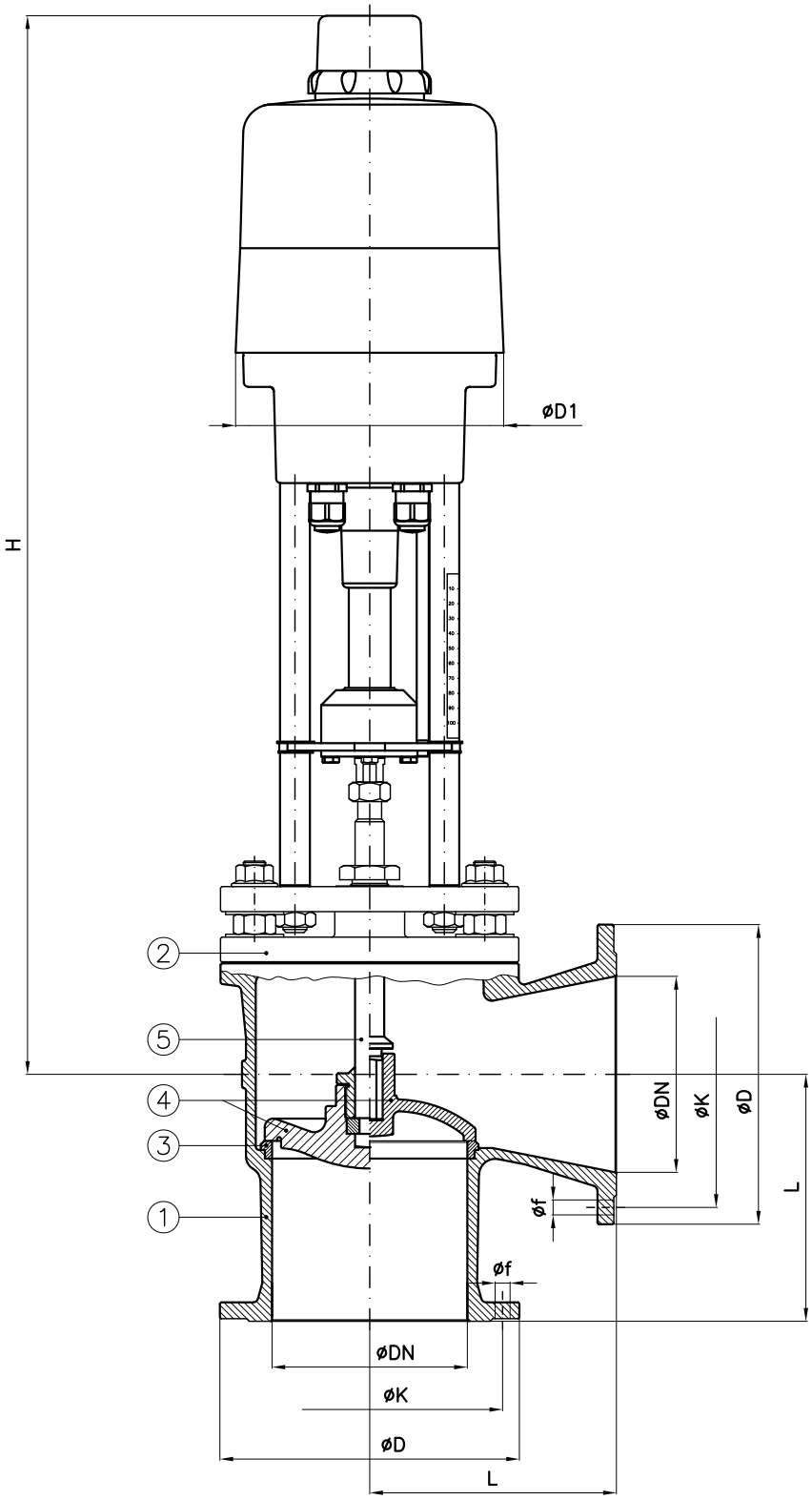

DN	D1	H (~)	L	D	K	f	Holes NO. f	Electric motor
40	180	630	95	130	100	14	4	PSL-210
50	180	630	100	140	110	14	4	PSL-210
65	180	640	120	160	130	14	4	PSL-210
80	180	655	130	190	150	18	4	PSL-210
100	180	725	150	210	170	18	4	PSL-214
125	250	875	175	240	200	18	8	PSL-320
150	250	895	200	265	225	18	8	PSL-320

Combinazione materiali standard – Standard materials Combination

		A/316	B/316	B/B	GS/316
ITEM	DENOMINAZIONE DENOMINATION	MATERIALE MATERIAL	MATERIALE MATERIAL	MATERIALE MATERIAL	MATERIALE MATERIAL
01	Body	Cast steel GP240-GH UNI EN10213	Bronze UNI EN1982 G-CuSn5Zn5Pb5	Bronze UNI EN1982 G-CuSn5Zn5Pb5	Nodular cast iron EN-GJS-400-15U UNI EN1563
02	Bonnet	Cast steel GP240-GH UNI EN10213	Bronze UNI EN1982 G-CuSn5Zn5Pb5	Bronze UNI EN1982 G-CuSn5Zn5Pb5	Nodular cast iron EN-GJS-400-15U UNI EN1563
03	Body seat	Stainless steel AISI316 UNI EN10088	Bronze UNI EN1982 G-CuSn5Zn5Pb5	Bronze UNI EN1982 G-CuSn5Zn5Pb5	Stainless steel AISI316 UNI EN10088
04	Disc (≤ DN80)	Stainless steel AISI316 UNI EN10088	Stainless steel AISI316 UNI EN10088	Bronze UNI EN1982 G-CuSn5Zn5Pb5	Stainless steel AISI316 UNI EN10088
04	Disc (≥ DN100)	Cast steel GP240-GH UNI EN10213 plus AISI316 facing welding	Stainless steel AISI316 UNI EN10088	Bronze UNI EN1982 G-CuSn5Zn5Pb5	Cast steel GP240-GH UNI EN10213 plus AISI316 facing welding
05	Stem	Stainless steel AISI316 UNI EN10088	Stainless steel AISI316 UNI EN10088	Stainless steel AISI316 UNI EN10088	Stainless steel AISI316 UNI EN10088

Combinazioni materiali non standard a richiesta
Note: Non standard materials combinations on request

Valvole ad angolo retto - serie pesante PN16 con motore elettrico
Globe valves angle type - heavy class NP16 with electric motor

Tab.127-ME-PSL

Conform to:
UNI EN1092
DIN 3202

Esecuzione comandata
SDSL type

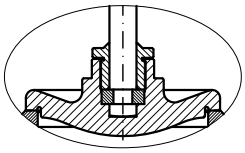

Esecuzione semiautomatica
SDNR type

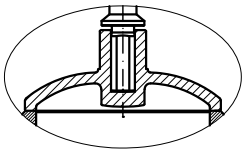

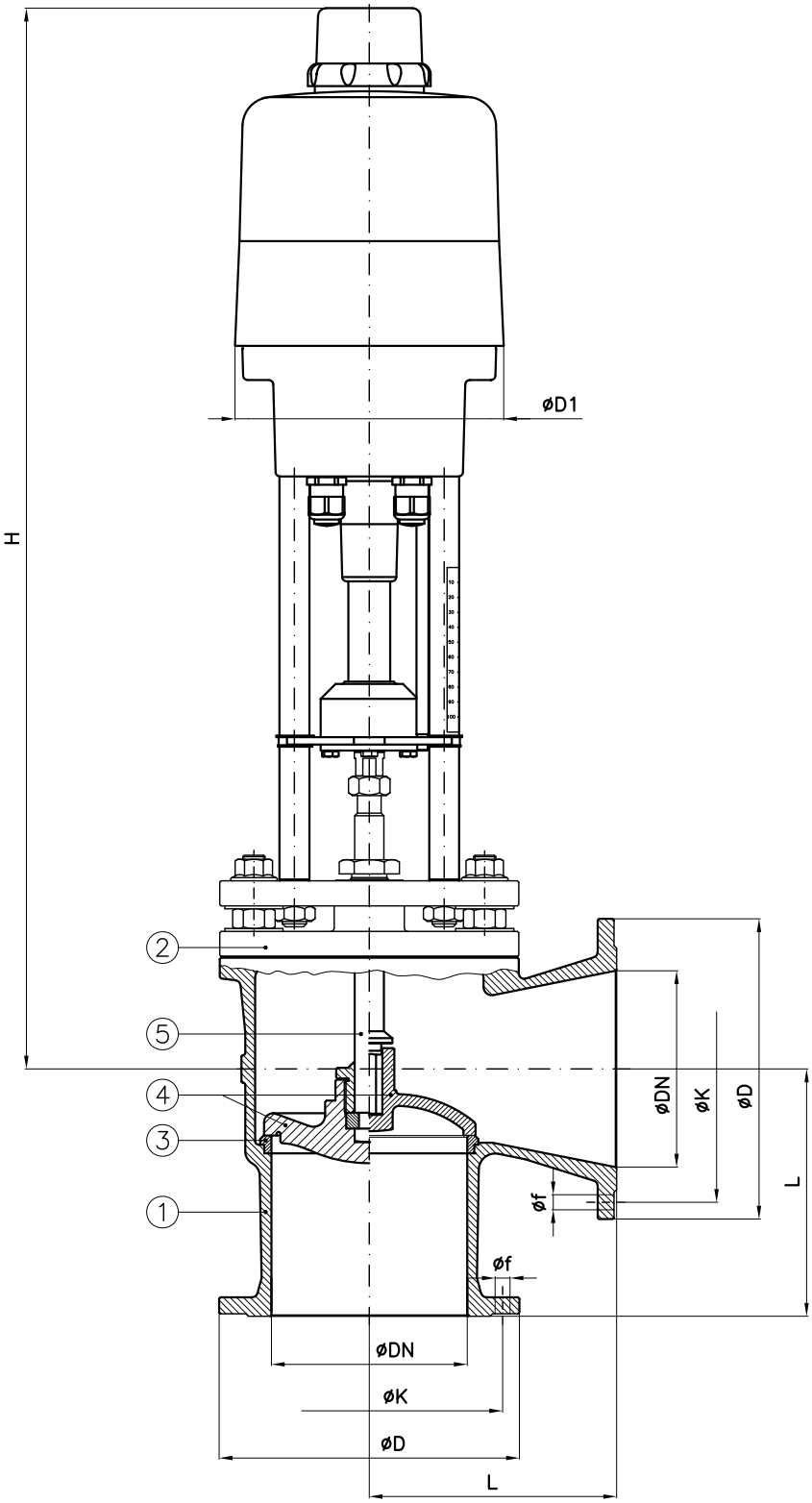

DN	D1	H (~)	L	D	K	f	Holes NO. f	Electric motor
40	180	630	115	150	110	18	4	PSL-210
50	180	630	125	165	125	18	4	PSL-210
65	180	645	145	185	145	18	4	PSL-210
80	180	715	155	200	160	18	8	PSL-214
100	250	865	175	220	180	18	8	PSL-320
125	250	885	200	250	210	18	8	PSL-325
150	250	895	225	285	240	22	8	PSL-330

Combinazione materiali standard – Standard materials Combination

ITEM	DENOMINAZIONE DENOMINATION	A/316 MATERIALE MATERIAL	B/316 MATERIALE MATERIAL	B/B MATERIALE MATERIAL	GS/316 MATERIALE MATERIAL
01	Body	Cast steel GP240-GH UNI EN10213	Bronze UNI EN1982 G-CuSn5Zn5Pb5	Bronze UNI EN1982 G-CuSn5Zn5Pb5	Nodular cast iron EN-GJS-400-15U UNI EN1563
02	Bonnet	Cast steel GP240-GH UNI EN10213	Bronze UNI EN1982 G-CuSn5Zn5Pb5	Bronze UNI EN1982 G-CuSn5Zn5Pb5	Nodular cast iron EN-GJS-400-15U UNI EN1563
03	Body seat	Stainless steel AISI316 UNI EN10088	Bronze UNI EN1982 G-CuSn5Zn5Pb5	Bronze UNI EN1982 G-CuSn5Zn5Pb5	Stainless steel AISI316 UNI EN10088
04	Disc (≤ DN80)	Stainless steel AISI316 UNI EN10088	Stainless steel AISI316 UNI EN10088	Bronze UNI EN1982 G-CuSn5Zn5Pb5	Stainless steel AISI316 UNI EN10088
04	Disc (≥ DN100)	Cast steel GP240-GH UNI EN10213 plus AISI316 facing welding	Stainless steel AISI316 UNI EN10088	Bronze UNI EN1982 G-CuSn5Zn5Pb5	Cast steel GP240-GH UNI EN10213 plus AISI316 facing welding
05	Stem	Stainless steel AISI316 UNI EN10088	Stainless steel AISI316 UNI EN10088	Stainless steel AISI316 UNI EN10088	Stainless steel AISI316 UNI EN10088

Note: Combinazioni materiali non standard a richiesta
Non standard materials combinations on request

Valvola ad angolo retto - serie ANSI300 RF
Globe valve angle type - ANSI300 RF

Tab.184AR ANSI300

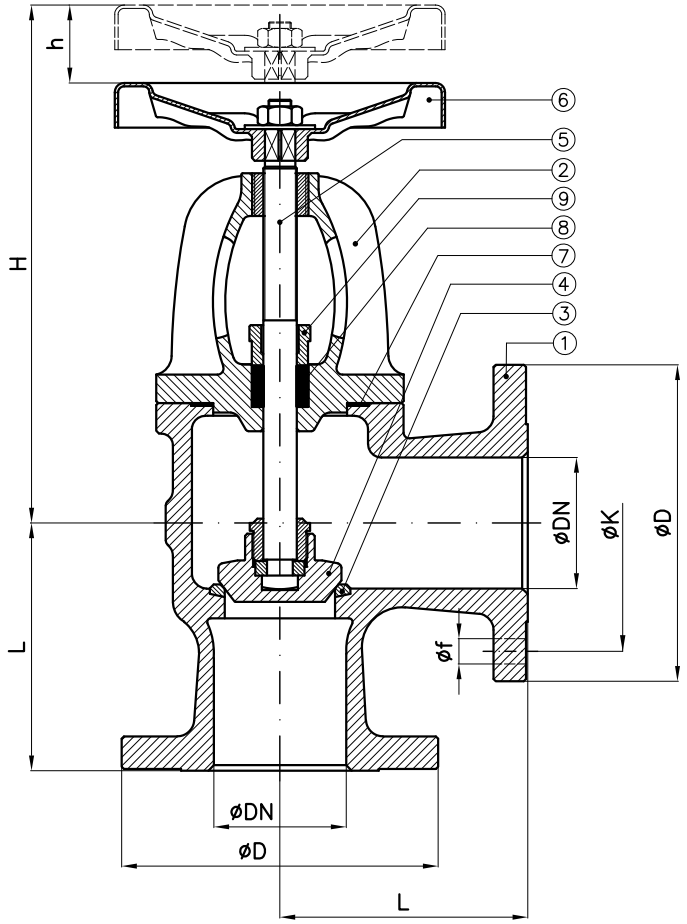

Tab.184AR-ANSI300-SDSL TYPE

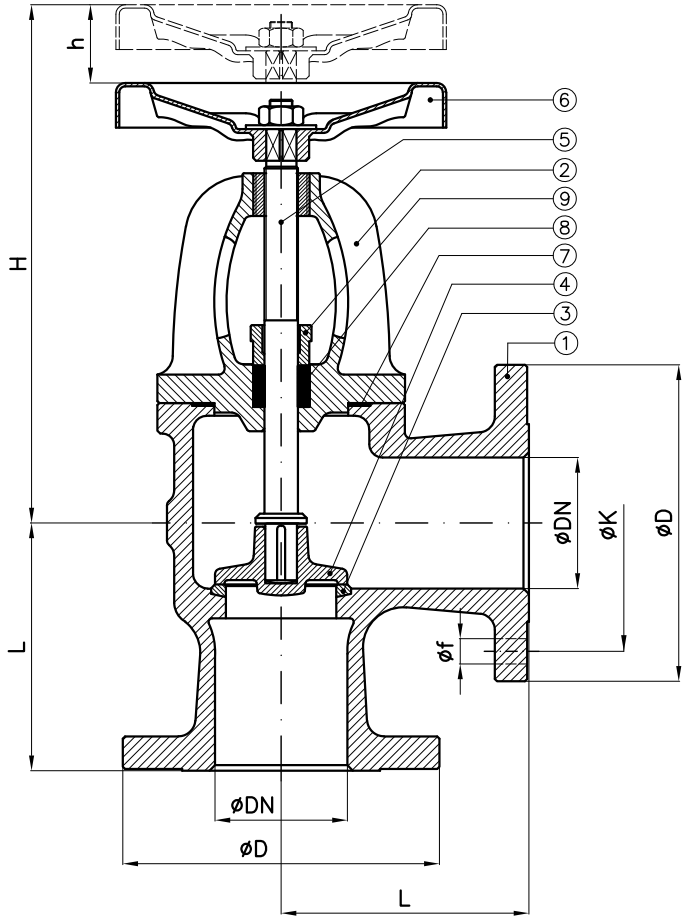

Tab.184AR-ANSI300-SDNR TYPE

DN	H (~)	h (~)	L	D	K	f	n°fori f
15	215	10	85	95	67	16	4
20	220	10	85	117	83	19	4
25	230	15	90	124	89	19	4
32	245	20	105	133	98	19	4
40	280	25	115	156	114	22	4
50	290	30	125	165	127	19	8
65	325	35	145	191	149	22	8
80	355	35	155	210	168	22	8
100	380	40	175	254	200	22	8
125	420	50	200	279	235	22	8
150	460	65	225	318	270	22	12
200	575	80	275	381	330	25	12

		A/420-316
ITEM	DENOMINAZIONE DENOMINATION	MATERIALE MATERIAL
01	Body	Cast steel GP240-GH UNI EN10213
02	Bonnet	Cast steel GP240-GH UNI EN10213
03	Body seat	Stainless steel AISI420 or AISI316 UNI EN10088
04	Disc (≤ DN80)	Stainless steel AISI420 or AISI316 UNI EN10088
04	Disc (≥ DN100)	Cast steel GP240-GH UNI EN10213 plus AISI308 facing welding
05	Stem	Stainless steel AISI420 or AISI316 UNI EN10088
06	Handwheel	Sheet of carbon steel
07	Gasket	Planiflex KG carbo/C PF81
08	Packing	Carbograph GR8800
09	Gland bushing	Steel Fe360B (S235JRC) UNI EN10025

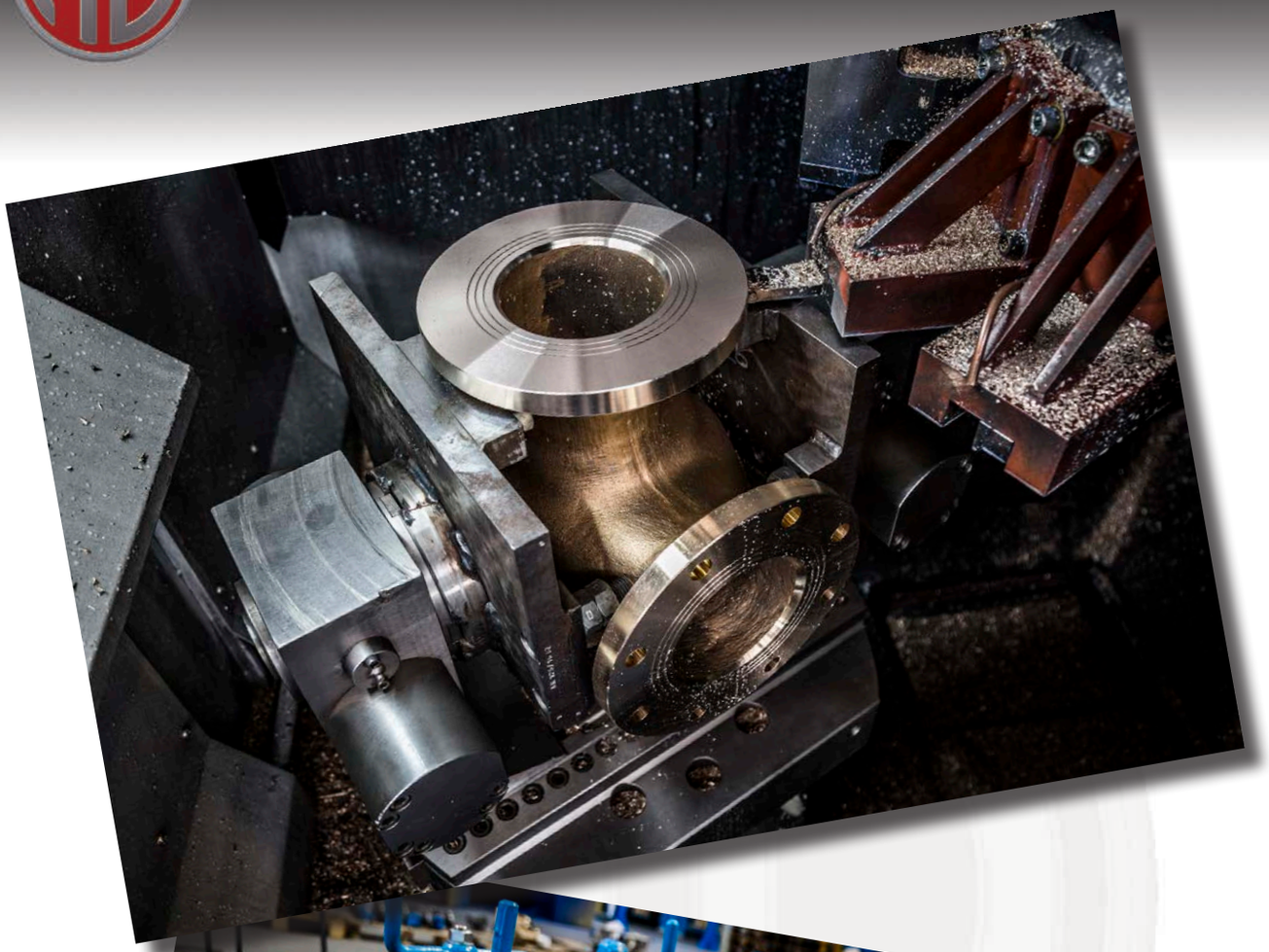

www.medanaevisca.it

Valvole a raccordo ogiva PN40 via diritta
Stop valves NP40 straight type nipple union

Tab.153

Conform to:
NE421344
NE421444
NE423344

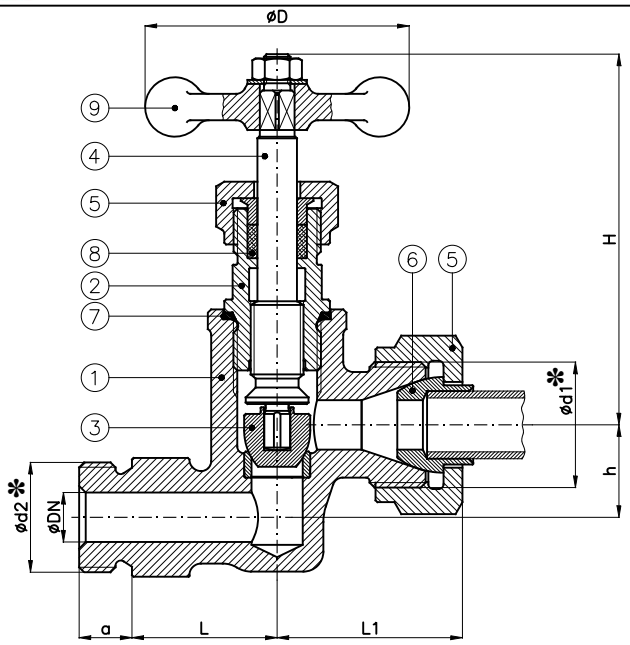

Exec.01

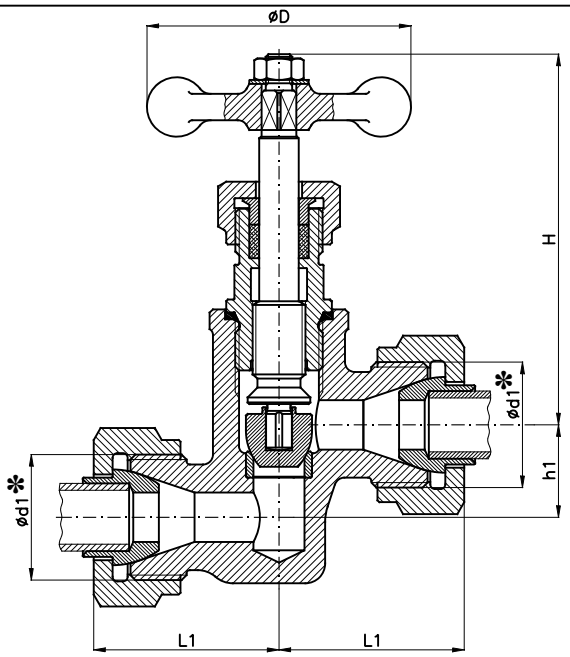

Exec.02

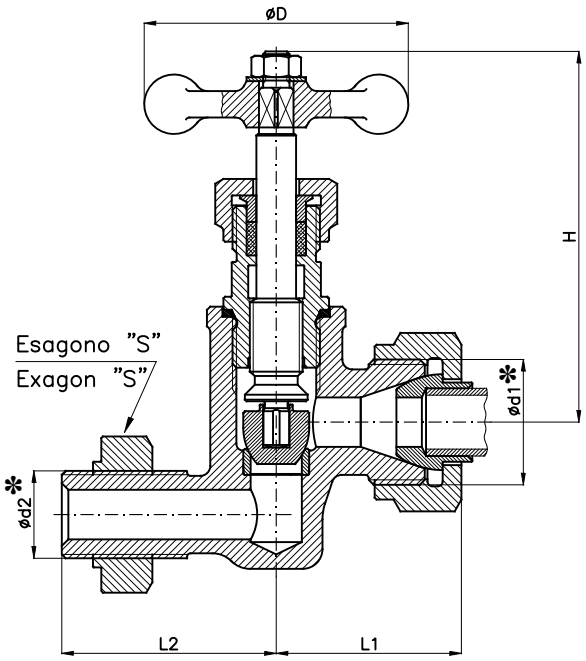

Exec.03

OTTURATORI – DISCS

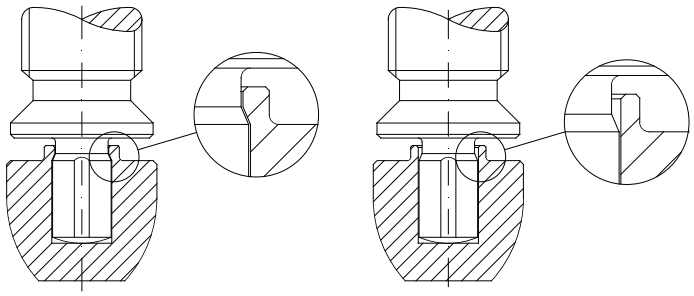

COMANDATO
SDSL type

SEMI AUTOMATICO
SDNR type

✻ : Filettatura GAS
✻ : BSPP threaded

▲ : a richiesta ød2=5/8"
▲ : *on request ød2=5/8"*

DN	a	D	d1	d2	H (~)	h	h1	L	L1	L2	S	Weight (Kg)
6	14	64	1/2"	3/8"	105	16	20	34	40	53	27	1.65
8	14	64	5/8"	1/2"	105	22	20	34	40	53	27	1.8
10	15	64	3/4"	1/2"▲	105	22	20	36	43	56	30	1.8
15	16	80	1"	3/4"	115	28	28	44	52	65	36	1.9
20	16	80	1"1/8	1"	115	28	28	44	52	65	36	2.2

Exec.	Acciaio – Cast steel	Ottone – brass
01	UNAV 8350.1	UNAV 8351.1
02	UNAV 8352.1	UNAV 8353.1
03	UNAV 8690.1	UNAV 8690.1

Combinazione materiali standard – Standard materials Combination			
		A/316	O/O
ITEM	DENOMINAZIONE DENOMINATION	MATERIALE MATERIAL	MATERIALE MATERIAL
01	Body	Forged steel ASTM A105	Brass CW617N (OT58)
02	Bonnet	Forged steel ASTM A105	Brass CW617N (OT58)
03	Disc	Stainless steel AISI316 UNI EN10088	Brass CW617N (OT58)
04	Stem	Stainless steel AISI316 UNI EN10088	Brass CW617N (OT58)
05	Cap	Steel A37 UNI EN10217-1	Brass CW617N (OT58)
06	Ogive	Steel A37 UNI EN10217-1	Copper
07	Gasket	Copper	Copper
08	Packing	KTL	KTL
09	Handwheel	Steel A37 UNI EN10217-1	Brass CW617N (OT58)
Nota: Note:	Combinazioni materiali non standard a richiesta Non standard materials combinations on request		

Valvole a raccordo ogiva PN40 angolo retto
Stop valves NP40 angle type nipple union

Tab.154

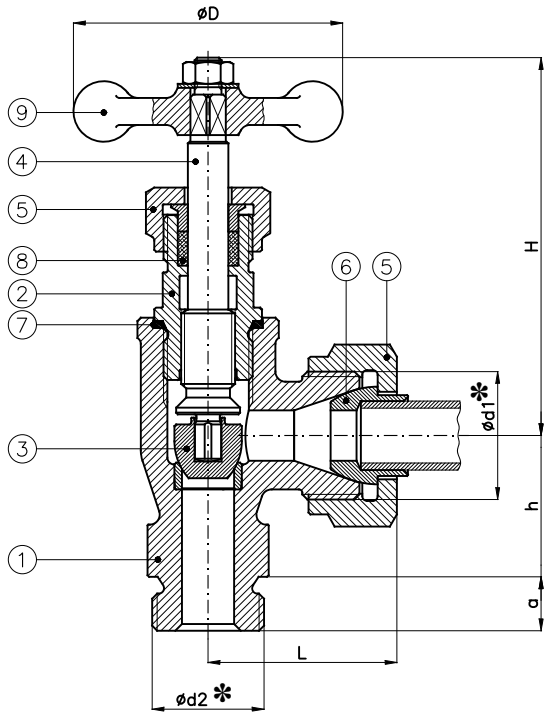

Exec.01

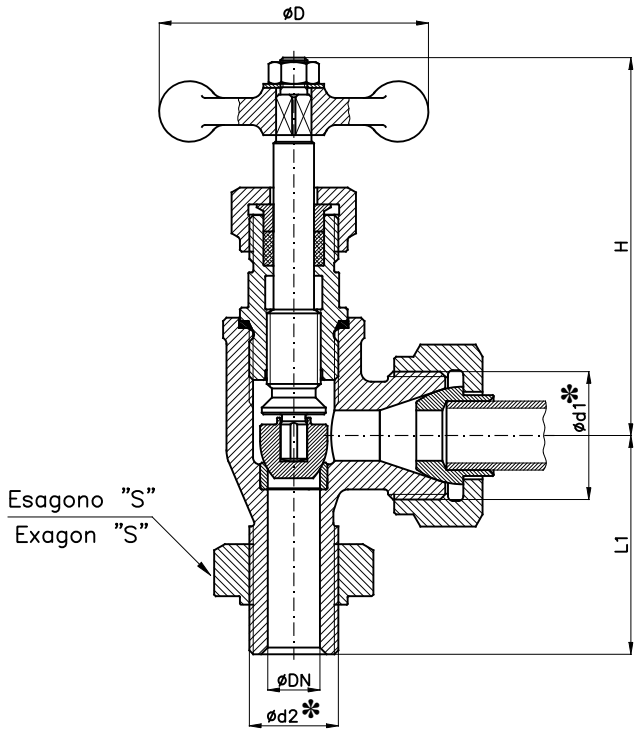

Exec.02

OTTURATORI – DISCS

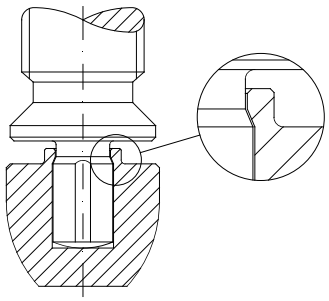

COMANDATO
SDSL type

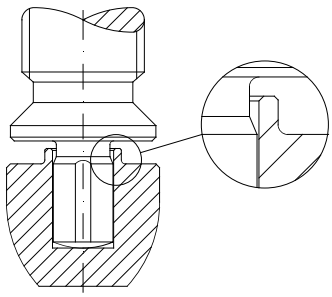

SEMI AUTOMATICO
SDNR type

✻ : Filettatura GAS
✻ : *BSPP threaded*

▲ : a richiesta ød2=5/8"Gas
▲ : *on request ød2=5/8"Gas*

DN	a	D	d1	d2	H (~)	h	L	L1	S	Weight (Kg)
6	14	64	1/2"	3/8"	105	33	40	52	27	1.55
8	14	64	5/8"	1/2"	105	33	40	52	27	1.65
10	15	64	3/4"	1/2" ▲	105	35	43	55	30	1.65
15	16	80	1"	3/4"	115	42	52	65	36	1.75
20	16	80	1"1/8	1"	115	42	52	65	36	2

Exec.	Acciaio – Cast steel	Ottone – brass
01	UNAV 8354.1	UNAV 8355.1
02	UNAV 8691.1	UNAV 8691.1

Combinazione materiali standard – Standard materials Combination			
		A/316	O/O
ITEM	DENOMINAZIONE DENOMINATION	MATERIALE MATERIAL	MATERIALE MATERIAL
01	Body	Forged steel ASTM A105	Brass CW617N (OT58)
02	Bonnet	Forged steel ASTM A105	Brass CW617N (OT58)
03	Disc	Stainless steel AISI316 UNI EN10088	Brass CW617N (OT58)
04	Stem	Stainless steel AISI316 UNI EN10088	Brass CW617N (OT58)
05	Cap	Steel A37 UNI EN10217-1	Brass CW617N (OT58)
06	Ogive	Steel A37 UNI EN10217-1	Copper
07	Gasket	Copper	Copper
08	Packing	KTL	KTL
09	Handwheel	Steel A37 UNI EN10217-1	Brass CW617N (OT58)
Nota: Note:	Combinazioni materiali non standard a richiesta Non standard materials combinations on request		

Valvole a soffietto serie PN16
Bellows valves NP16

Tab.184/5

Esecuzione a richiesta
On request execution

Conform to:
UNI EN1092
DIN 3202

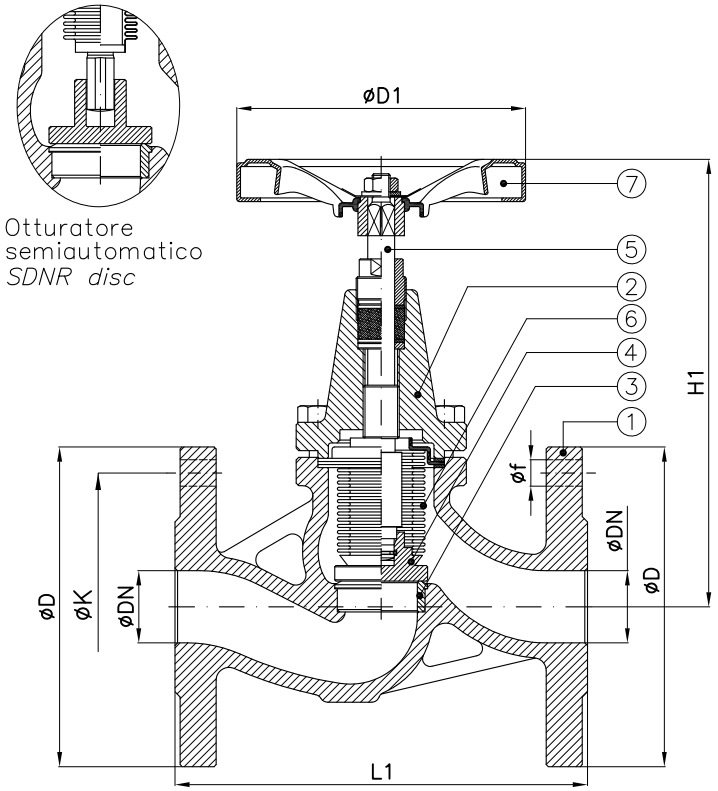

Tab.184/5–54

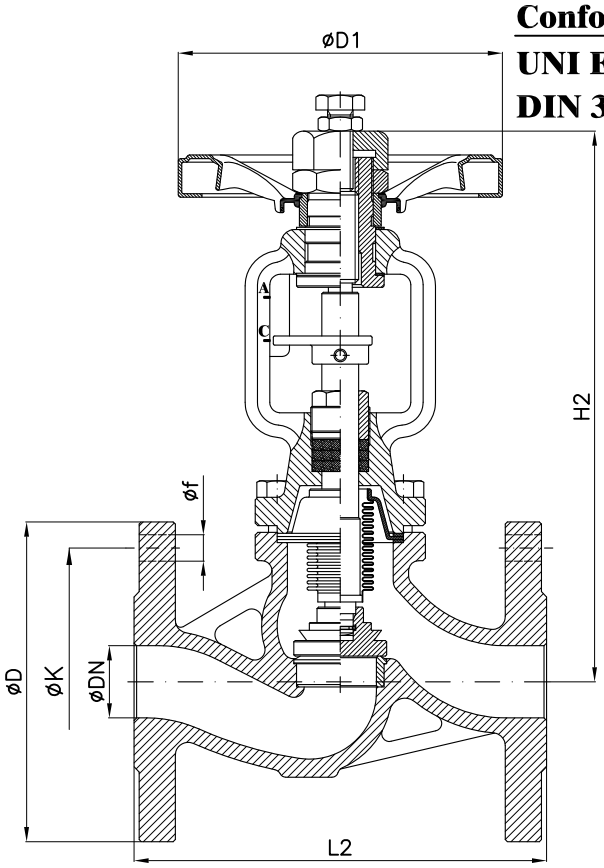

Tab.184/5–64

DN	D1	H1 (~)	L1	Weight (Kg)	H2 (~)	L2	Weight (Kg)	D	K	f	Holes NO. f
15	125	165	130	3	235	130	3.8	95	65	14	4
20	125	165	150	3.7	235	150	4.5	105	75	14	4
25	125	185	160	4.4	245	160	5.3	115	85	14	4
32	125	185	180	6.1	245	180	6.9	140	100	18	4
40	150	215	200	9.1	275	200	10	150	110	18	4
50	150	215	230	11	275	230	12.1	165	125	18	4
65	200	295	290	19	375	290	21	185	145	18	4
80	200	295	310	21.5	375	310	23.5	200	160	18	8
100	250	320	350	28	400	350	31	220	180	18	8
125	300	345	400	42	445	400	46	250	210	18	8
150	350	400	480	56.5	495	480	59.5	285	240	22	8
200	400	455	600	104	620	600	113	340	295	22	12
250	500	585	730	171.5	750	730	179.5	405	355	26	12
300	600	–	–	–	770	850	240.5	460	410	26	12

Combinazione materiali standard – Standard materials Combination				
		A/420	G/420	GS/420
ITEM	DENOMINAZIONE DENOMINATION	MATERIALE MATERIAL	MATERIALE MATERIAL	MATERIALE MATERIAL
01	Body	Cast steel GP240–GH UNI EN10213	Cast iron UNI EN1561 EN–GJL–250	Nodular cast iron EN–GJS–400–15U UNI EN1563
02	Bonnet	Cast steel GP240–GH UNI EN10213	Cast iron UNI EN1561 EN–GJL–250	Nodular cast iron EN–GJS–400–15U UNI EN1563
03	Body seat	Stainless steel AISI316 UNI EN10088	Stainless steel AISI420 UNI EN10088	Stainless steel AISI420 UNI EN10088
04	Disc (≤ DN80)	Stainless steel AISI420 UNI EN10088	Stainless steel AISI420 UNI EN10088	Stainless steel AISI420 UNI EN10088
04	Disc (≥ DN100)	Cast steel GP240–GH UNI EN10213 plus AISI316 facing welding	Cast steel GP240–GH UNI EN10213 plus AISI308 facing welding	Cast steel GP240–GH UNI EN10213 plus AISI308 facing welding
05	Stem	Stainless steel AISI420 UNI EN10088	Stainless steel AISI420 UNI EN10088	Stainless steel AISI420 UNI EN10088
06	Bellows	Stainless steel AISI321 UNI EN10088	Stainless steel AISI321 UNI EN10088	Stainless steel AISI321 UNI EN10088
07	Handwheel	Sheet of carbon steel	Sheet of carbon steel	Sheet of carbon steel

Nota: Combinazioni materiali non standard a richiesta
Note: Non standard materials combinations on request

www.medanaevisca.it

Valvole a flusso libero PN6 - PN16 - PN40
Straight stop free flow valves - NP6 - NP16 - NP40

Tab.185

Conform to:
UNI EN1092

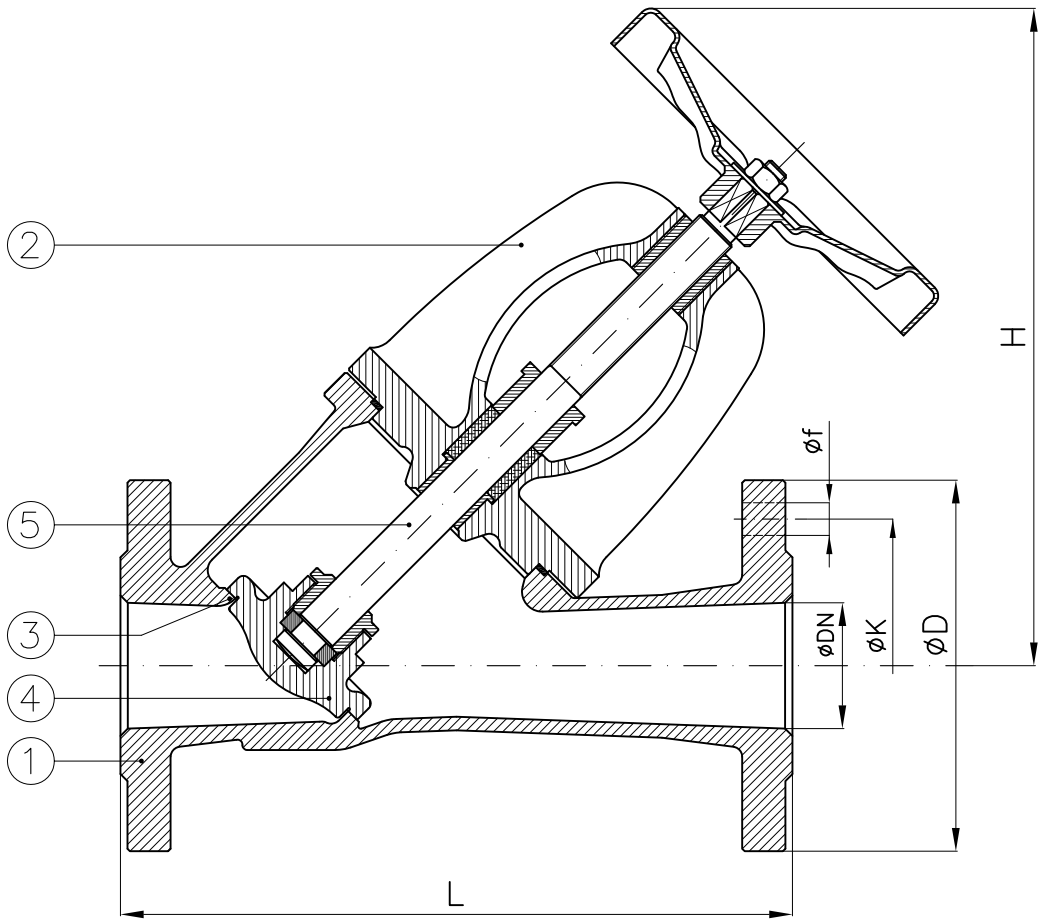

ESEC. AUTOMATICA
EXEC. SDNR

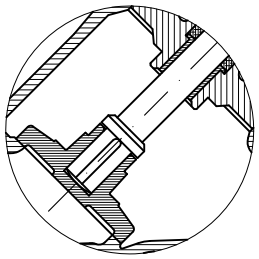

	PN6 – NP6							PN16 – NP16							PN40 – NP40						
DN	H ~	L	D	K	f	n°fori holes n° f	Weight (≅Kg)	H ~	L	D	K	f	n°fori holes n° f	Weight (≅Kg)	H ~	L	D	K	f	n°fori holes n° f	Weight (≅Kg)
15			80	55	11	4				95	65	14	4		195	130	95	65	14	4	
20			90	65	11	4				105	75	14	4		205	150	105	75	14	4	
25			100	75	11	4				115	85	14	4		215	160	115	85	14	4	
32			120	90	14	4				140	100	18	4		225	180	140	100	18	4	
40			130	100	14	4				150	110	18	4		235	200	150	110	18	4	
50			140	110	14	4				165	125	18	4		250	230	165	125	18	4	
65			160	130	14	4				185	145	18	4		315	290	185	145	18	8	
80			190	150	18	4				200	160	18	8		325	310	200	160	18	8	
100			210	170	18	4				220	180	18	4		405	350	235	190	22	8	
125			240	200	18	8				250	210	18	8		425	400	270	220	26	8	
150			265	225	18	8				285	240	22	8		505	480	300	250	26	8	
175			295	255	18	8				315	270	22	8		515	550	350	295	30	12	
200			320	280	18	8				340	295	22	12		625	600	375	320	30	12	

Combinazione materiali standard – Standard materials Combination					
		A/316 (RF)	B/316 (FF)	G/316 (FF)	GS/316 (RF)
ITEM	DENOMINAZIONE DENOMINATION	MATERIALE MATERIAL	MATERIALE MATERIAL	MATERIALE MATERIAL	MATERIALE MATERIAL
01	Body	Cast steel GP240-GH UNI EN10213	Bronze UNI EN1982 G-CuSn5Zn5Pb5	Cast iron UNI EN1561 EN-GJL-250	Nodular cast iron EN-GJS-400-15U UNI EN1563
02	Bonnet	Cast steel GP240-GH UNI EN10213	Bronze UNI EN1982 G-CuSn5Zn5Pb5	Cast iron UNI EN1561 EN-GJL-250	Nodular cast iron EN-GJS-400-15U UNI EN1563
03	Body seat	Stainless steel AISI316 UNI EN10088	Bronze UNI EN1982 G-CuSn5Zn5Pb5	Stainless steel AISI316 UNI EN10088	Stainless steel AISI316 UNI EN10088
04	Disc (≤ DN80)	Stainless steel AISI316 UNI EN10088	Stainless steel AISI316 UNI EN10088	Stainless steel AISI316 UNI EN10088	Stainless steel AISI316 UNI EN10088
04	Disc (≥ DN100)	Cast steel GP240-GH UNI EN10213 plus AISI316 facing welding	Stainless steel AISI316 UNI EN10088	Cast steel GP240-GH UNI EN10213 plus AISI316 facing welding	Cast steel GP240-GH UNI EN10213 plus AISI316 facing welding
05	Stem	Stainless steel AISI316 UNI EN10088	Stainless steel AISI316 UNI EN10088	Stainless steel AISI316 UNI EN10088	Stainless steel AISI316 UNI EN10088

Nota: Combinazioni materiali non standard a richiesta
Note: Non standard materials combinations on request

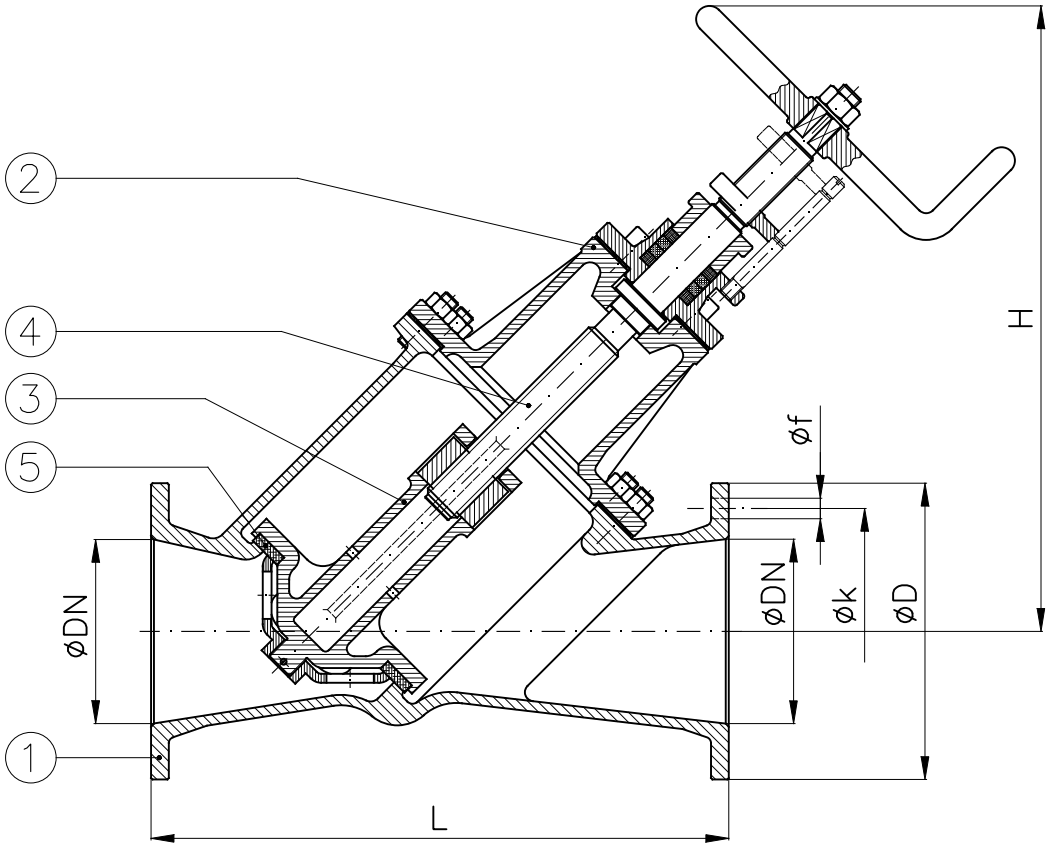

PN10 M.M.I. – NP10 M.M.I.							
DN	H (~)	L	D	K	f	Holes NO. f	Weight (Kg)
80	320	280	155	130	14	8	21
100	400	330	175	150	14	8	26
125	430	390	200	175	14	12	40

Combinazione materiali standard – Standard materials Combination			
		B/316	N/316
ITEM	DENOMINAZIONE DENOMINATION	MATERIALE MATERIAL	MATERIALE MATERIAL
01	Body	Bronze UNI EN1982 G-CuSn5Zn5Pb5	Bronze UNI EN1982 G-CuSn10Zn2Ni2
02	Bonnet	Bronze UNI EN1982 G-CuSn5Zn5Pb5	Bronze UNI EN1982 G-CuSn10Zn2Ni2
03	Disc	Bronze UNI EN1982 G-CuSn5Zn5Pb5	Bronze UNI EN1982 G-CuSn10Zn2Ni2
04	Stem	Stainless steel AISI316 UNI EN10088	Stainless steel AISI316 UNI EN10088
05	Gasket	EPDM	EPDM
Nota: Combinazioni materiali non standard a richiesta Note: Non standard materials combinations on request			

Valvole a spillo a via diritta classe 3000
Needle valves straight type class 3000

Art.33

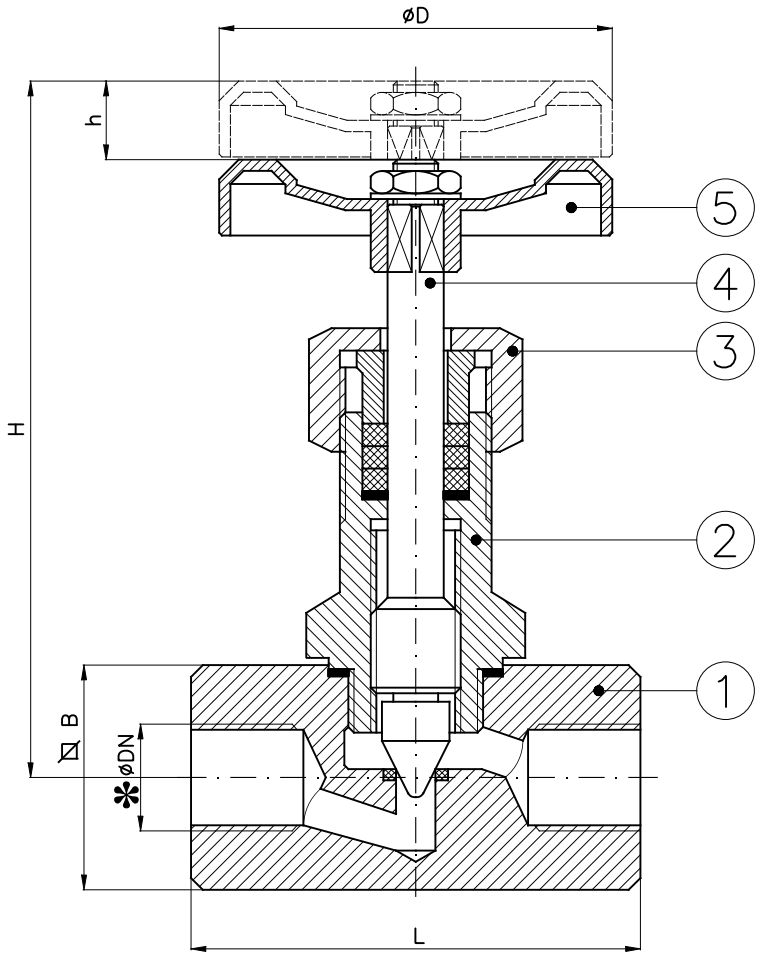

✻: Filettatura GAS
✻: *BSPP threaded*

DN	B	D	H	h	L	Weight (Kg)
1/4"	25	63	112	12	50	0.55
3/8"	30	63	112	12	55	0.55
1/2"	34	72	112	12	60	0.55
3/4"	40	72	112	11	70	0.73
1"	45	80	127	11	75	1
1"1/4	57	100	152	12	90	1.15
1"1/2	67	120	157	12	100	2.7
2"	78	140	162	12	120	4.05

Combinazione materiali standard – Standard materials Combination			
		A/316	316/316
ITEM	DENOMINAZIONE DENOMINATION	MATERIALE MATERIAL	MATERIALE MATERIAL
01	Body	Forged steel ASTM A105N	Stainless steel AISI316 UNI EN10088
02	Bonnet	Forged steel ASTM A105N	Stainless steel AISI316 UNI EN10088
03	Nut	Forged steel ASTM A105N	Stainless steel AISI316 UNI EN10088
04	Stem	Stainless steel AISI316 UNI EN10088	Stainless steel AISI316 UNI EN10088
05	Handwheel	Aluminium	Aluminium

Nota: Combinazioni materiali non standard a richiesta
Note: Non standard materials combinations on request

Valvole a spillo ad angolo retto classe 3000
Needle valves angle type class 3000

Art.34

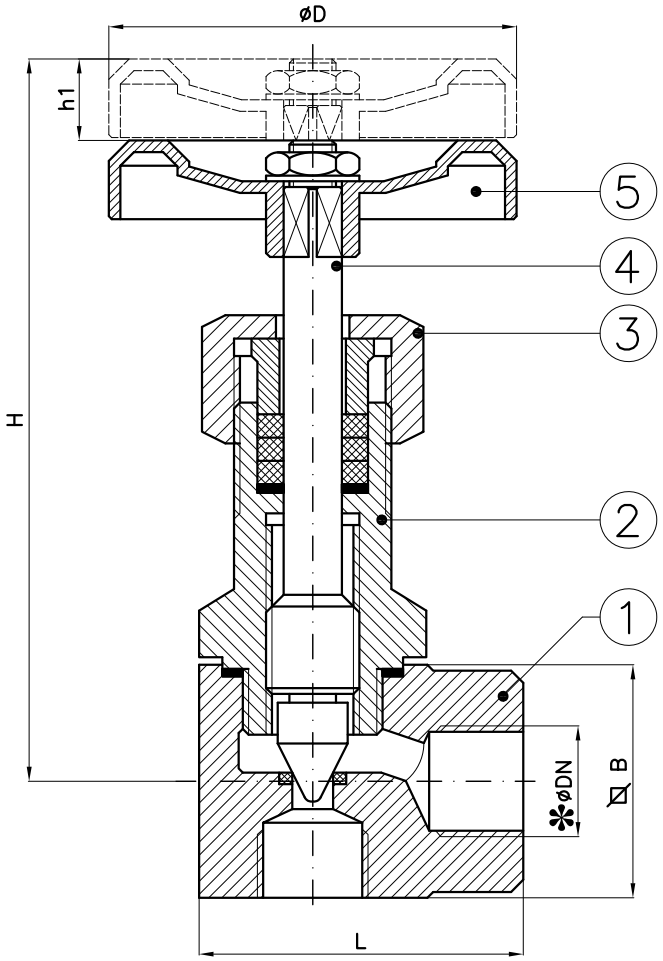

✻: Filettatura GAS
✻: *BSPP threaded*

DN	B	D	H	h	L	Weight (Kg)
1/4"	35	63	115	12	47	0.45
3/8"	35	63	115	12	47	0.45
1/2"	35	72	115	12	47	0.45
3/4"	40	72	127	11	57	0.61
1"	45	80	130	11	62	0.88
1"1/4	50	100	152	12	80	1.10
1"1/2	60	120	157	12	95	2.5
2"	70	140	162	12	100	3.75

Combinazione materiali standard – Standard materials Combination			
		A/316	316/316
ITEM	DENOMINAZIONE DENOMINATION	MATERIALE MATERIAL	MATERIALE MATERIAL
01	Body	Forged steel ASTM A105N	Stainless steel AISI316 UNI EN10088
02	Bonnet	Forged steel ASTM A105N	Stainless steel AISI316 UNI EN10088
03	Nut	Forged steel ASTM A105N	Stainless steel AISI316 UNI EN10088
04	Stem	Stainless steel AISI316 UNI EN10088	Stainless steel AISI316 UNI EN10088
05	Handwheel	Aluminium	Aluminium
Nota: Combinazioni materiali non standard a richiesta Note: Non standard materials combinations on request			

Valvole a spillo portamanometro in ottone
Brass needle valves

Art. NDV

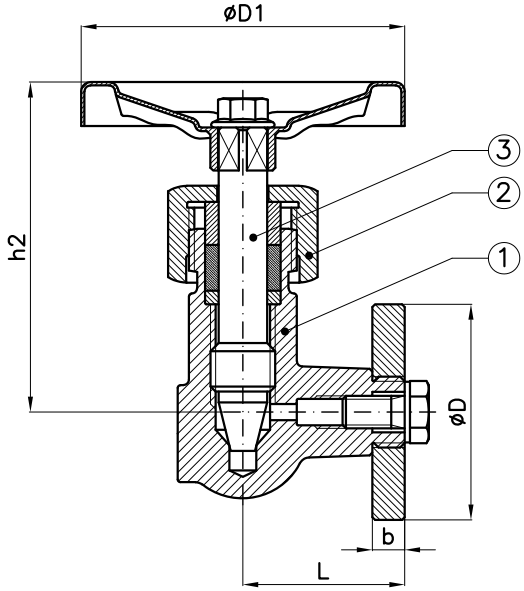

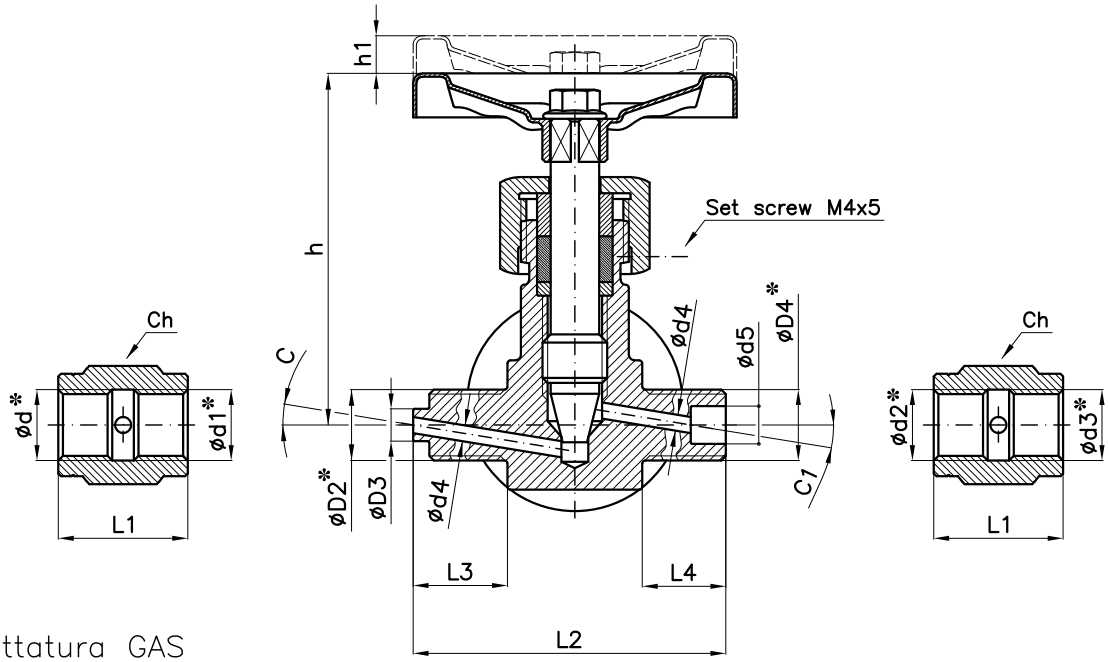

✻: Filettatura GAS

✻: *BSPP threaded*

DN	b	C	C1	D	D1	D2	D3	D4	d	d1	d2	d3	d4	d5	h	h1	h2	L	L1	L2	L3	L4	Ch
1/4"	6	10°	15°	40	60	1/4"Gas dx	6	1/4"Gas sx	1/4"Gas sx	1/4"Gas dx	1/4"Gas sx	1/4"Gas dx	3.2	6.5	67	7	64	30	24	58	17	15	19
3/8"	6	10°	15°	40	60	1/4"Gas dx	6	1/4"Gas sx	3/8"Gas sx	1/4"Gas dx	1/4"Gas sx	3/8"Gas dx	3.2	6.5	67	7	64	30	28	58	18	15	22
1/2"	6	10°	15°	40	60	1/2"Gas dx	6	1/2"Gas sx	1/2"Gas sx	1/2"Gas dx	1/2"Gas sx	1/2"Gas dx	3.2	6.5	67	7	64	30	35	70.3	25	20	27

Combinazione materiali standard – Standard materials Combination		
		O/O
ITEM	DENOMINAZIONE DENOMINATION	MATERIALE MATERIAL
01	Body	Brass CW617N (OT58)
02	Bonnet	Brass CW617N (OT58)
03	Stem	Brass CW617N (OT58)
Nota: Combinazioni materiali non standard a richiesta Note: Non standard materials combinations on request		

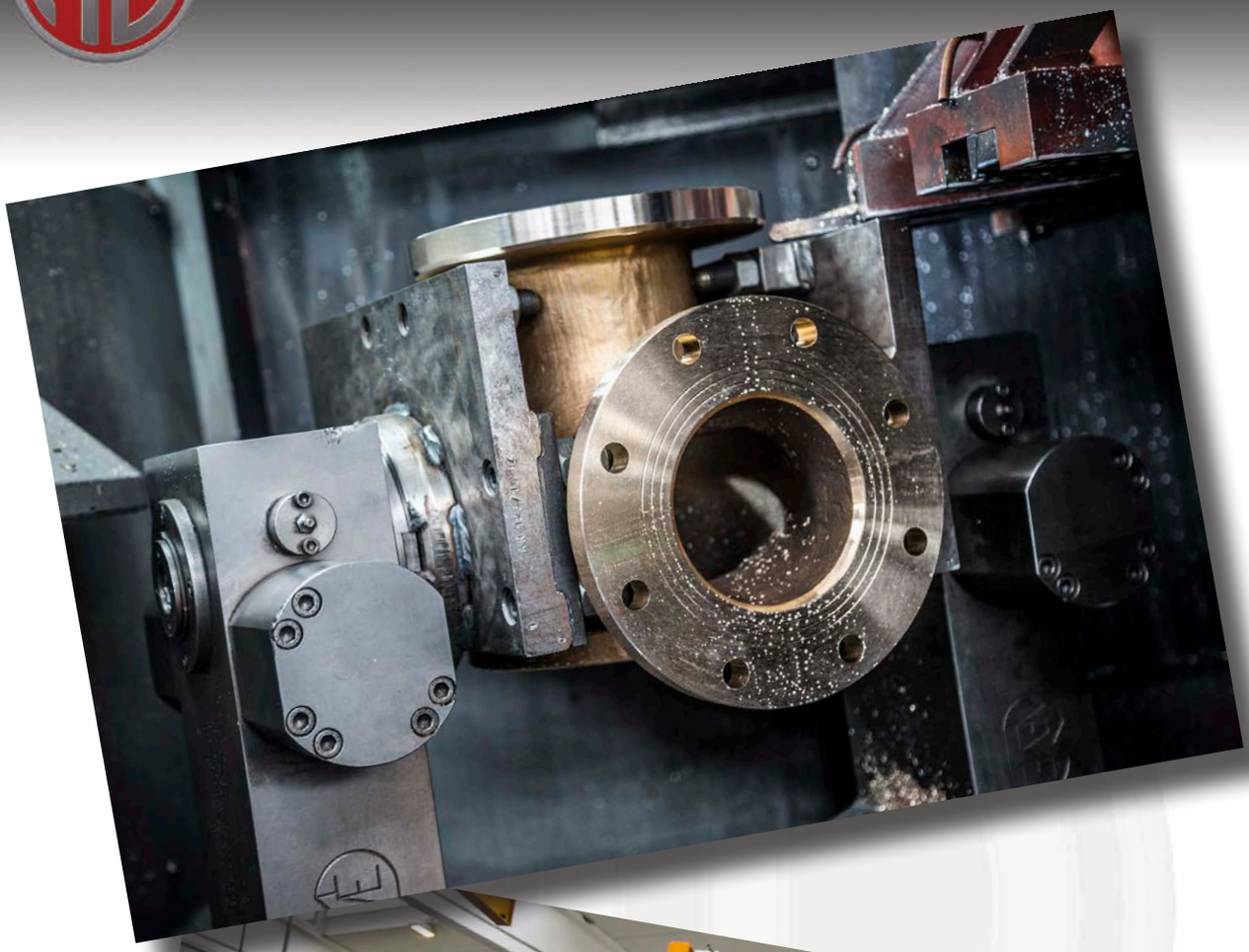

www.medanaevisca.it

Valvole a globo - Globe valves
Classe / Class - ANSI150

Tab.187A

Conform to:
Test API 598
MSS SP61
ANSI B16.5
ANSI B16.10
ANSI B16.34
RF FLANGES

Esecuzione a richiesta
On request execution

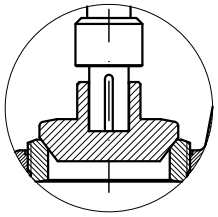

Semi automatica (SDNR)

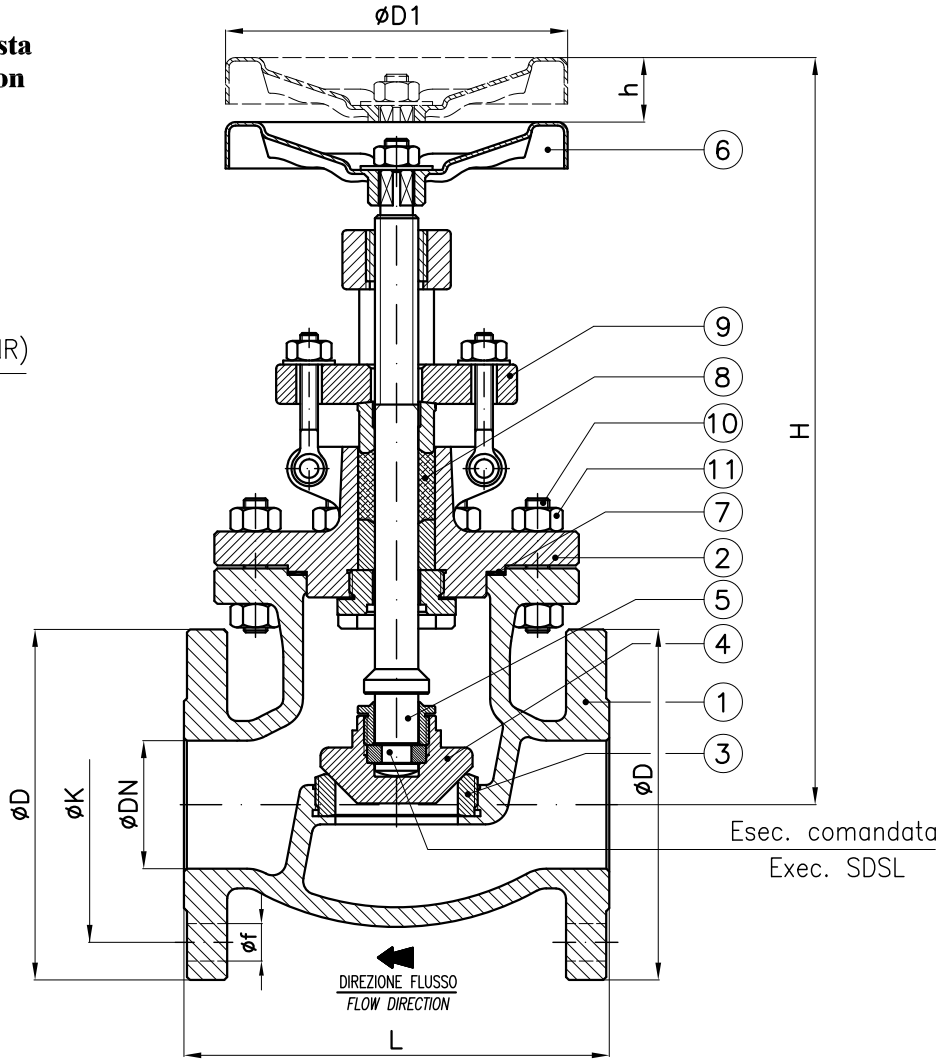

DN	D1	h (~)	H (~)	L	D	K	f	Holes NO. f	Weight (Kg)
1"1/2	175	25	330	165.0	127.0	98.4	16	4	14
2"	200	25	355	203.2	152.4	120.6	19	4	19
2"1/2	250	30	415	215.9	177.8	139.7	19	4	30
3"	250	40	435	241.3	190.5	152.4	19	4	37
4"	300	45	490	292.0	228.6	190.5	19	8	53
5"	400	55	555	355.5	254.0	215.9	22	8	
6"	400	60	610	406.3	279.4	241.3	22	8	98
8"	500	85	700	495.2	342.9	298.4	22	8	184
10"	575	85	825	622.2	406.4	361.9	25	12	
12"				698.4	482.6	431.8	25	12	
14"	650	90	1270	787.3	533.4	476.2	29	12	

Combinazione materiali standard – Standard Combination materials

		A/316	A/420	CF8M/316			A/316	A/420	CF8M/316
ITEM	DENOMINAZIONE DENOMINATION	MATERIALE MATERIAL	MATERIALE MATERIAL	MATERIALE MATERIAL	ITEM	DENOMINAZIONE DENOMINATION	MATERIALE MATERIAL	MATERIALE MATERIAL	MATERIALE MATERIAL
01	Body	Cast steel ASTM A216 WCB	Cast steel ASTM A216 WCB	Stainless steel ASTM A351 CF8M	06	Handwheel	Sheet of carbon steel	Sheet of carbon steel	Sheet of carbon steel
02	Bonnet	Cast steel ASTM A216 WCB	Cast steel ASTM A216 WCB	Stainless steel ASTM A351 CF8M	07	Gasket	Planiflex KG carbo/C PF81	Planiflex KG carbo/C PF81	Planiflex KG carbo/C PF81
03	Body seat	Stainless steel ASTM A182 (F316)	Stainless steel ASTM A182 (F6)	Stainless steel ASTM A182 (F316)	08	Paking	Carbograph GR8800	Carbograph GR8800	Carbograph GR8800
04	Disc (≤ DN3")	Stainless steel ASTM A182 (F316)	Stainless steel ASTM A182 (F6)	Stainless steel ASTM A182 (F316)	09	Gland bushing	Cast steel ASTM A105	Cast steel ASTM A105	Stainless steel ASTM A351 CF8M
04	Disc (≥ DN4")	Cast steel ASTM A216 WCB plus A351 CF8M facing welding	Cast steel ASTM A216 WCB plus A182 (F6) facing welding	Stainless steel ASTM A351 CF8M	10	Bonnet stud bolt	ASTM A193 B7	ASTM A193 B7	Stainless steel B8M
05	Stem	Stainless steel ASTM A182 (F316)	Stainless steel ASTM A182 (F6)	Stainless steel ASTM A182 (F316)	11	Nut	ASTM A194 2H	ASTM A194 2H	Stainless steel Gr.8M

Nota: Combinazioni materiali non standard a richiesta
Note: Combinations non standard materials on request

Valvole a globo - Globe valves
Classe / Class - ANSI150

Tab.187B

Esecuzione a richiesta
On request execution

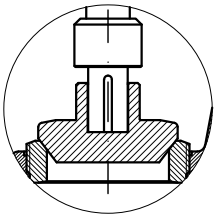

Semi automatica (SDNR)

Conform to:
Test API 598
MSS SP61
ANSI B16.10
ANSI B16.24
FF or RF FLANGES

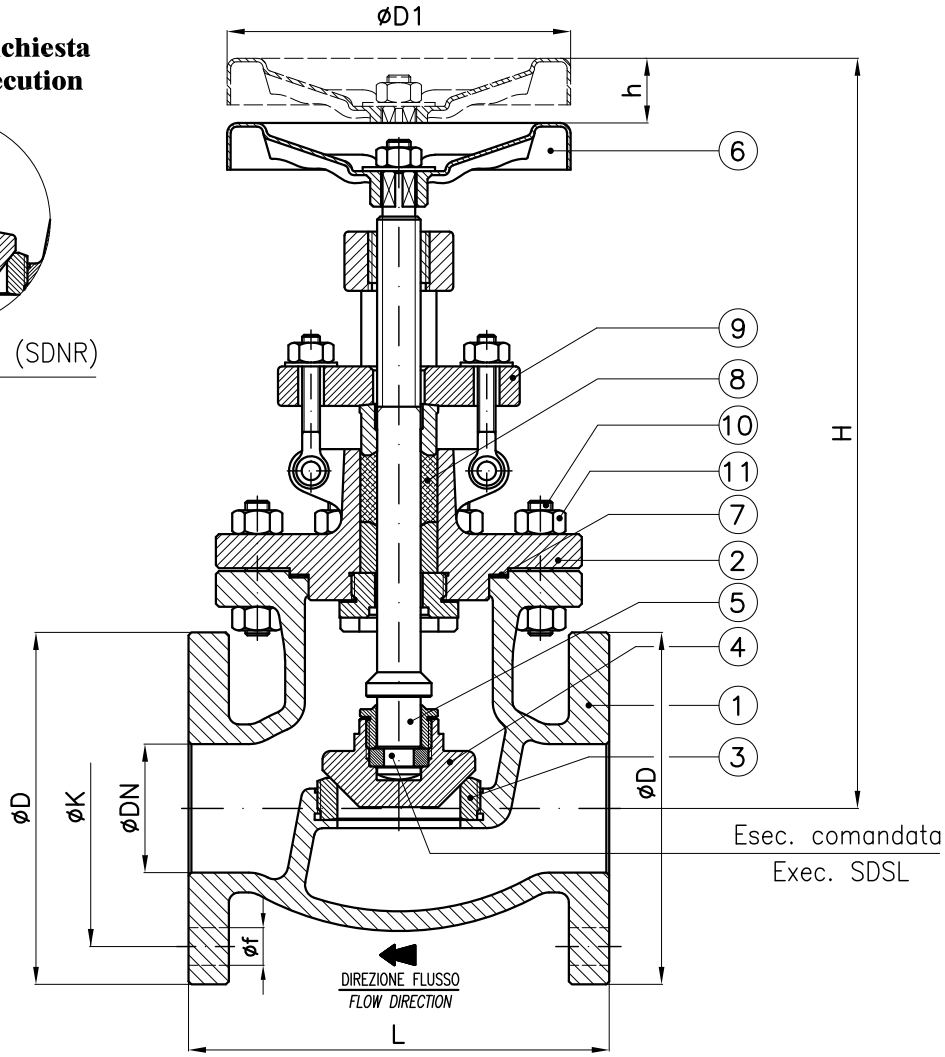

DN	D1	h (~)	H (~)	L	D	K	f	Holes NO. f	Weight (Kg)
1/2"	100	10	225	139.7 or 108	88.9	60.3	16	4	4.5
3/4"	100			139.7 or 108	98.4	69.8	16	4	5
1"	100			152.4 or 127	107.9	79.4	16	4	6
1"1/4	100			165.1 or 140	117.5	88.9	16	4	10
1"1/2	175	25	330	165.1	127.0	98.4	16	4	15
2"	200	25	355	203.2	152.4	120.6	19	4	22
2"1/2	250	30	415	215.9	177.8	139.7	19	4	29
3"	250	40	435	241.3	190.5	152.4	19	4	37
4"	300	45	490	292.0	228.6	190.5	19	8	53
5"	400	55	555	355.5	254.0	215.9	22	8	81
6"	400	60	610	406.3	279.4	241.3	22	8	102
8"	500	85	700	495.2	342.9	298.4	22	8	184
10"	575	85	825	622.2	406.4	361.9	25	12	258
12"				698.4	482.6	431.8	25	12	418
14"	650	90	1270	787.3	533.4	476.2	29	12	560

Combinazione materiali standard – Standard Combination materials

ITEM	DENOMINAZIONE DENOMINATION	BA/BA MATERIALE MATERIAL	B/B MATERIALE MATERIAL	B/316 MATERIALE MATERIAL	ITEM	DENOMINAZIONE DENOMINATION	BA/BA MATERIALE MATERIAL	B/B MATERIALE MATERIAL	B/316 MATERIALE MATERIAL
01	Body	Aluminum–Bronze ASTM B148	Bronze ASTM B62	Bronze ASTM B62	07	Gasket	Planiflex KG carbo/C PF81	Planiflex KG carbo/C PF81	Planiflex KG carbo/C PF81
02	Bonnet	Aluminum–Bronze ASTM B148	Bronze ASTM B62	Bronze ASTM B62	08	Paking	Carbograph GR8800	Carbograph GR8800	Carbograph GR8800
03	Body seat	Aluminum–Bronze ASTM B148	Bronze ASTM B62	Stainless steel ASTM A182 (F316)	09	Gland bushing	Aluminum–Bronze ASTM B148	Bronze ASTM B62	Bronze ASTM B62
04	Disc	Aluminum–Bronze ASTM B148	Bronze ASTM B62	Stainless steel ASTM A182 (F316)	10	Bonnet stud bolt	Galvanized steel ASTM A193 B7 or S.S. B8M	Galvanized steel ASTM A193 B7 or S.S. B8M	Galvanized steel ASTM A193 B7 or S.S. B8M
05	Stem	Aluminum–Bronze ASTM B148	Bronze ASTM B62	Stainless steel ASTM A182 (F316)	11	Nut	Galvanized steel ASTM A194 2H or S.S. Gr.8M	Galvanized steel ASTM A194 2H or S.S. Gr.8M	Galvanized steel ASTM A194 2H or S.S. Gr.8M
06	Handwheel	Sheet of carbon steel	Sheet of carbon steel	Sheet of carbon steel					

Nota: Combinazioni materiali non standard a richiesta
Note: Combinations non standard materials on request

Valvole a globo - Globe valves
Classe / Class - ANSI150 - ANSI125

Tab.187G

Esecuzione a richiesta
On request execution

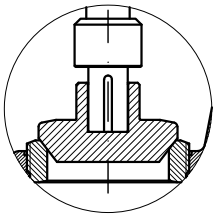

Semi automatica (SDNR)

Conform to:
Test API 598
MSS SP61
ANSI B16.10
FF or RF FLANGES

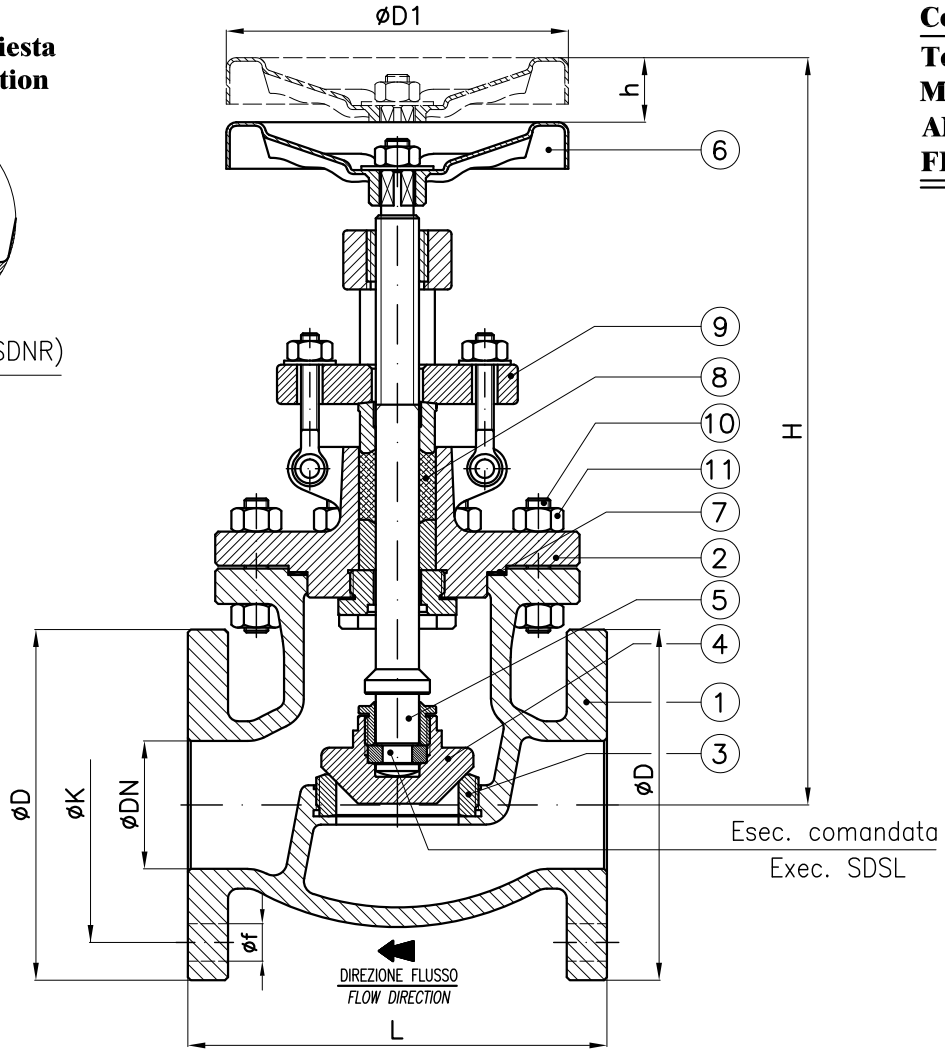

DN	D1	h (~)	H (~)	L	D	K	f	Holes NO. f	Weight (Kg)
1"1/2	175	25	335	165.0	127.0	98.4	16	4	14
2"	200	35	365	203.2	152.4	120.6	19	4	19
2"1/2	250	35	425	215.9	177.8	139.7	19	4	27
3"	250	40	440	241.3	190.5	152.4	19	4	33
4"	300	45	470	292.0	228.6	190.5	19	8	51
5"	400	70	580	355.5	254.0	215.9	22	8	72
6"	400			406.3	279.4	241.3	22	8	
8"	500			495.2	342.9	298.4	22	8	
10"	575	100	860	622.2	406.4	361.9	25	12	251
12"				698.4	482.6	431.8	25	12	430
14"	650	100	1270	787.3	533.4	476.2	29	12	

Combinazione materiali standard – Standard Combination materials

		G/316	G/B			G/316	G/B
ITEM	DENOMINAZIONE DENOMINATION	MATERIALE MATERIAL	MATERIALE MATERIAL	ITEM	DENOMINAZIONE DENOMINATION	MATERIALE MATERIAL	MATERIALE MATERIAL
01	Body	Cast iron ASTM A126 GrB	Cast iron ASTM A126 GrB	06	Handwheel	Sheet of carbon steel	Sheet of carbon steel
02	Bonnet	Cast iron ASTM A126 GrB	Cast iron ASTM A126 GrB	07	Gasket	Planiflex KG carbo/C PF81	Planiflex KG carbo/C PF81
03	Body seat	Stainless steel ASTM A182 (F316)	Bronze ASTM B62	08	Paking	Carbograph GR8800	Carbograph GR8800
04	Disc (≤ DN3")	Stainless steel ASTM A182 (F316)	Bronze ASTM B62	09	Gland bushing	Cast steel ASTM A105	Bronze ASTM B62
04	Disc (≥ DN4")	Cast steel ASTM A216 WCB plus A351 CF8M facing welding	Bronze ASTM B62	10	Bonnet stud bolt	ASTM A193 B7	ASTM A193 B7
05	Stem	Stainless steel ASTM A182 (F316)	Bronze ASTM B62	11	Nut	ASTM A194 2H	ASTM A194 2H

Nota: Combinazioni materiali non standard a richiesta
Note: Combinations non standard materials on request

Valvole a globo - Globe valves
Classe / Class - ANSI150

Tab.187GS

Conform to:
Test API 598
MSS SP61
ANSI B16.10
FF or RF FLANGES

Esecuzione a richiesta
On request execution

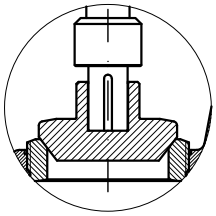

Semi automatica (SDNR)

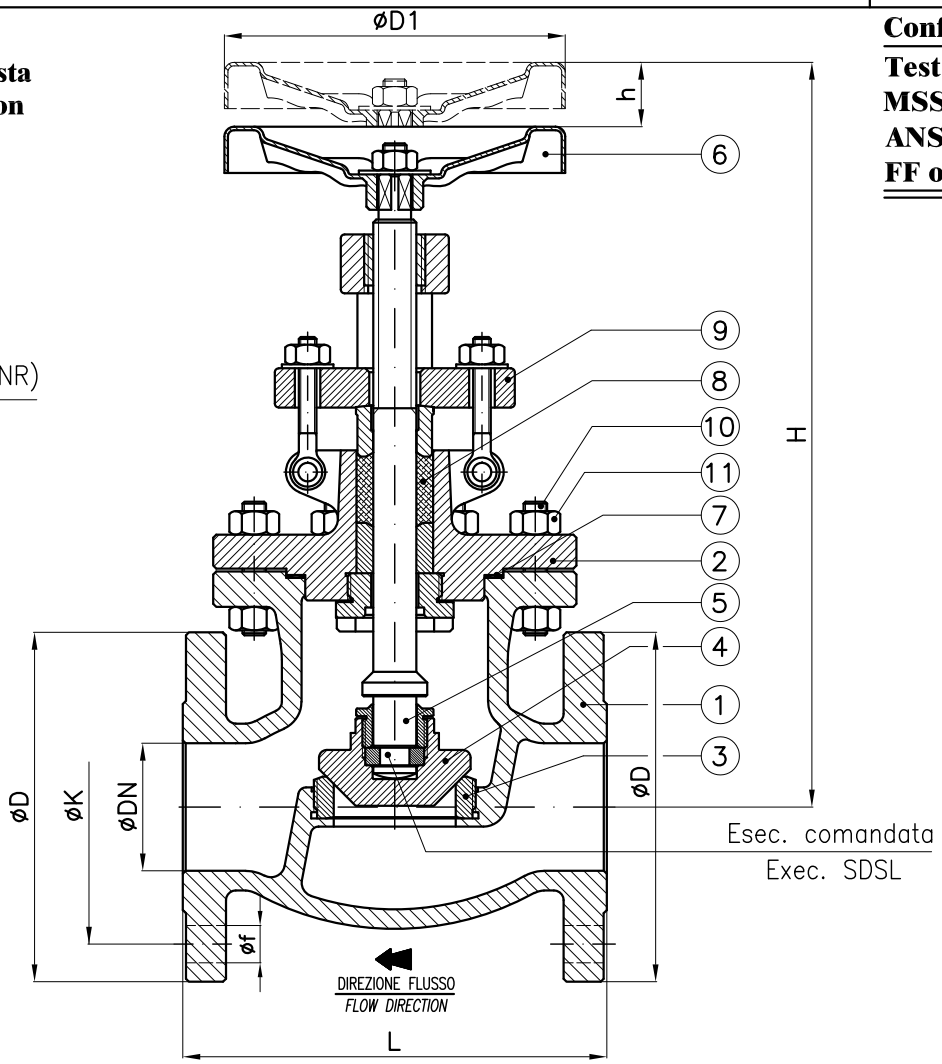

DN	D1	h (~)	H (~)	L	D	K	f	Holes NO. f	Weight (Kg)
1"1/2	175	25	335	165.0	127.0	98.4	16	4	14
2"	200	35	365	203.2	152.4	120.6	19	4	19
2"1/2	250	35	425	215.9	177.8	139.7	19	4	27
3"	250	40	440	241.3	190.5	152.4	19	4	33
4"	300	45	470	292.0	228.6	190.5	19	8	51
5"	400	70	580	355.5	254.0	215.9	22	8	72
6"	400			406.3	279.4	241.3	22	8	
8"	500			495.2	342.9	298.4	22	8	
10"	575	100	860	622.2	406.4	361.9	25	12	251
12"				698.4	482.6	431.8	25	12	430
14"	650	100	1270	787.3	533.4	476.2	29	12	

Combinazione materiali standard – Standard Combination materials

		GS/316	GS/B			GS/316	GS/B
ITEM	DENOMINAZIONE DENOMINATION	MATERIALE MATERIAL	MATERIALE MATERIAL	ITEM	DENOMINAZIONE DENOMINATION	MATERIALE MATERIAL	MATERIALE MATERIAL
01	Body	Nodular cast iron ASTM A395	Nodular cast iron ASTM A395	06	Handwheel	Sheet of carbon steel	Sheet of carbon steel
02	Bonnet	Nodular cast iron ASTM A395	Nodular cast iron ASTM A395	07	Gasket	Planiflex KG carbo/C PF81	Planiflex KG carbo/C PF81
03	Body seat	Stainless steel ASTM A182 (F316)	Bronze ASTM B62	08	Paking	Carbograph GR8800	Carbograph GR8800
04	Disc (≤ DN3")	Stainless steel ASTM A182 (F316)	Bronze ASTM B62	09	Gland bushing	Cast steel ASTM A105	Bronze ASTM B62
04	Disc (≥ DN4")	Cast steel ASTM A216 WCB plus A351 CF8M facing welding	Bronze ASTM B62	10	Bonnet stud bolt	ASTM A193 B7	ASTM A193 B7
05	Stem	Stainless steel ASTM A182 (F316)	Bronze ASTM B62	11	Nut	ASTM A194 2H	ASTM A194 2H

Nota: Combinazioni materiali non standard a richiesta
Note: Combinations non standard materials on request

Valvole a globo - Globe valves
Classe / Class - ANSI300

Tab.188A

Conform to:
Test API 598
MSS SP61
ANSI B16.5
ANSI B16.10
ANSI B16.34
RF FLANGES

Esecuzione a richiesta
On request execution

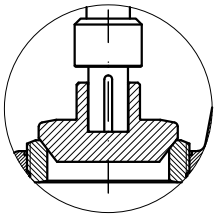

Semi automatica (SDNR)

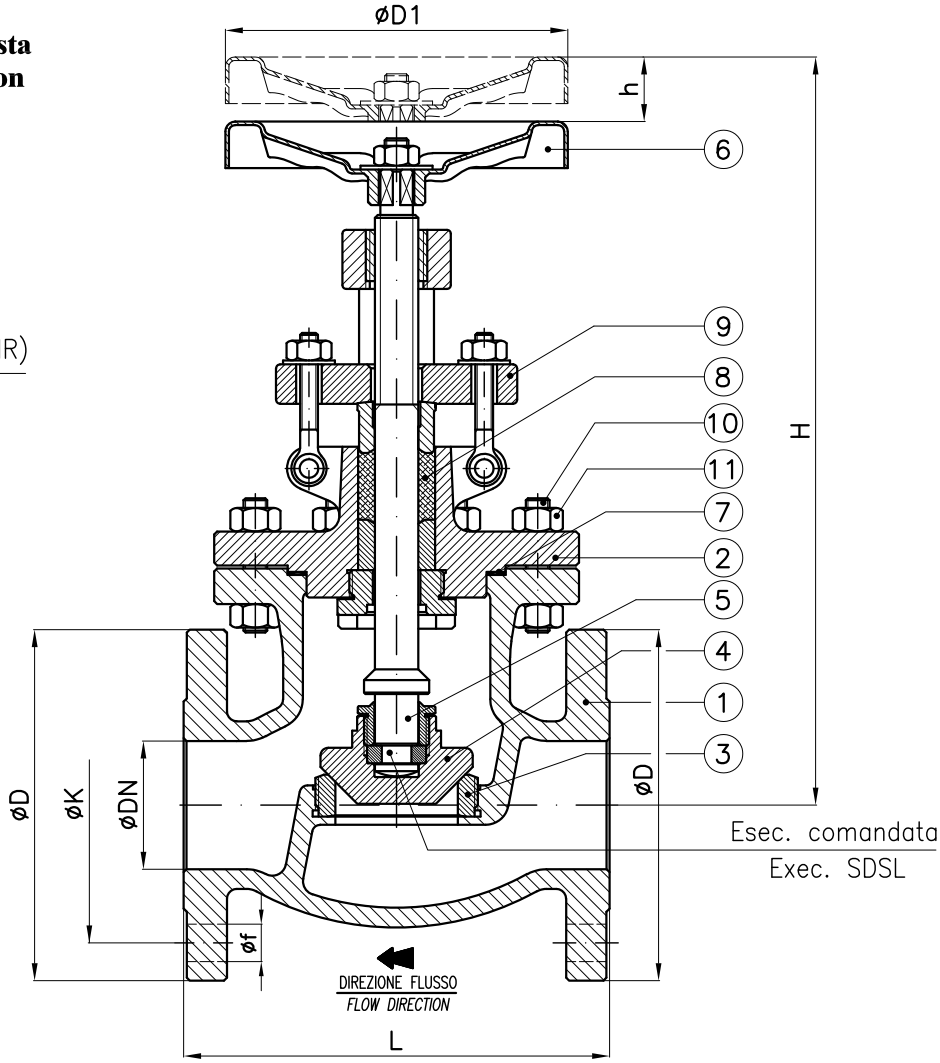

Esecuzione in acciaio forgiato (DN1/2" a DN2"), vedere Tab199GL
Forged steel execution (ND1/2" to ND2"), see Tab199GL

DN	D1	h (~)	H (~)	L	D	K	f	Holes NO. f	Weight (Kg)
2"	200	35	380	266.7	165.1	127.0	19	8	20
2"1/2	300	35	460	292.0	190.5	149.2	22	8	43
3"	300	35	500	317.4	209.5	168.3	22	8	57
4"	400	40	600	355.5	254.0	200.0	22	8	87
5"	500	55	630	400.0	279.4	234.9	22	8	114
6"	575	75	720	444.4	317.5	269.9	22	12	156
8"		80	860	558.7	381.0	330.2	25	12	273
10"				622.2	444.5	387.4	29	16	
12"				711.1	520.7	450.9	32	16	

Combinazione materiali standard – Standard Combination materials

		A/316	A/420	CF8M/316			A/316	A/420	CF8M/316
ITEM	DENOMINAZIONE DENOMINATION	MATERIALE MATERIAL	MATERIALE MATERIAL	MATERIALE MATERIAL	ITEM	DENOMINAZIONE DENOMINATION	MATERIALE MATERIAL	MATERIALE MATERIAL	MATERIALE MATERIAL
01	Body	Cast steel ASTM A216 WCB	Cast steel ASTM A216 WCB	Stainless steel ASTM A351 CF8M	06	Handwheel	Sheet of carbon steel	Sheet of carbon steel	Sheet of carbon steel
02	Bonnet	Cast steel ASTM A216 WCB	Cast steel ASTM A216 WCB	Stainless steel ASTM A351 CF8M	07	Gasket	Planiflex KG carbo/C PF81	Planiflex KG carbo/C PF81	Planiflex KG carbo/C PF81
03	Body seat	Stainless steel ASTM A182 (F316)	Stainless steel ASTM A182 (F6)	Stainless steel ASTM A182 (F316)	08	Paking	Carbograph GR8800	Carbograph GR8800	Carbograph GR8800
04	Disc (≤ DN3")	Stainless steel ASTM A182 (F316)	Stainless steel ASTM A182 (F6)	Stainless steel ASTM A182 (F316)	09	Gland bushing	Cast steel ASTM A105	Cast steel ASTM A105	Stainless steel ASTM A351 CF8M
04	Disc (≥ DN4")	Cast steel ASTM A216 WCB plus A351 CF8M facing welding	Cast steel ASTM A216 WCB plus A182 (F6) facing welding	Stainless steel ASTM A351 CF8M	10	Bonnet stud bolt	ASTM A193 B7	ASTM A193 B7	Stainless steel B8M
05	Stem	Stainless steel ASTM A182 (F316)	Stainless steel ASTM A182 (F6)	Stainless steel ASTM A182 (F316)	11	Nut	ASTM A194 2H	ASTM A194 2H	Stainless steel Gr.8M

Nota: Combinazioni materiali non standard a richiesta
Note: Combinations non standard materials on request

Valvole a globo - Globe valves
Classe / Class - ANSI300

Tab.188B

Esecuzione a richiesta
On request execution

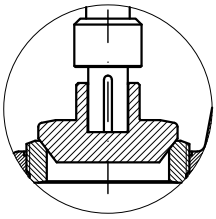

Semi automatica (SDNR)

Conform to:
Test API 598
MSS SP61
ANSI B16.10
ANSI B16.24
FF or RF FLANGES

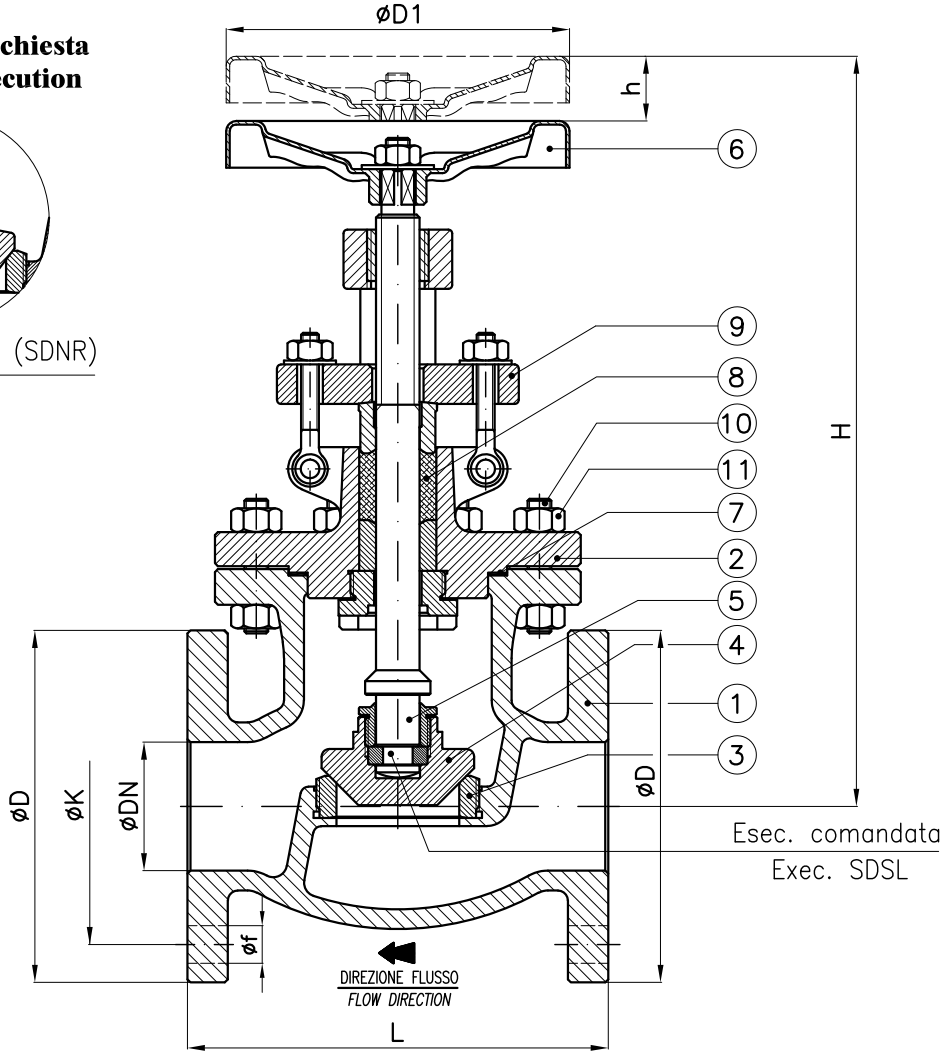

DN	D1	h (~)	H (~)	L	D	K	f	Holes NO. f	Weight (Kg)
1/2"	100	8	200	139.7	95.2	66.7	16	4	4.5
1/2"	100	8	200	152.4	95.2	66.7	16	4	6
3/4"	100	15	225	152.4	117.5	82.5	19	4	5.5
3/4"	100	15	225	177.8	117.5	82.5	19	4	7
1"	100	20	235	165.1	123.8	88.9	19	4	7.5
1"	100	20	240	203.2	123.8	88.9	19	4	8
1"1/2	200	30	375	229.0	155.6	114.3	22	4	23
2"	200	35	380	266.7	165.1	127.0	19	8	31
2"1/2	300	35	460	292.0	190.5	149.2	22	8	
3"	300	35	500	317.4	209.5	168.3	22	8	56
4"	400	40	600	355.5	254.0	200.0	22	8	
5"	500	55	630	400.0	279.4	234.9	22	8	
6"	575	75	720	444.4	317.5	269.9	22	12	173
8"		80	860	558.7	381.0	330.2	25	12	
10"				622.2	444.5	387.4	29	16	
12"				711.1	520.7	450.9	32	16	

Combinazione materiali standard – Standard Combination materials

ITEM	DENOMINAZIONE DENOMINATION	BA/BA MATERIALE MATERIAL	B/B MATERIALE MATERIAL	B/316 MATERIALE MATERIAL
01	Body	Aluminum–Bronze ASTM B148	Bronze ASTM B62	Bronze ASTM B62
02	Bonnet	Aluminum–Bronze ASTM B148	Bronze ASTM B62	Bronze ASTM B62
03	Body seat	Aluminum–Bronze ASTM B148	Bronze ASTM B62	Stainless steel ASTM A182 (F316)
04	Disc	Aluminum–Bronze ASTM B148	Bronze ASTM B62	Stainless steel ASTM A182 (F316)
05	Stem	Aluminum–Bronze ASTM B148	Bronze ASTM B62	Stainless steel ASTM A182 (F316)
06	Handwheel	Sheet of carbon steel	Sheet of carbon steel	Sheet of carbon steel

ITEM	DENOMINAZIONE DENOMINATION	BA/BA MATERIALE MATERIAL	B/B MATERIALE MATERIAL	B/316 MATERIALE MATERIAL
07	Gasket	Planiflex KG carbo/C PF81	Planiflex KG carbo/C PF81	Planiflex KG carbo/C PF81
08	Paking	Carbograph GR8800	Carbograph GR8800	Carbograph GR8800
09	Gland bushing	Aluminum–Bronze ASTM B148	Bronze ASTM B62	Bronze ASTM B62
10	Bonnet stud bolt	Galvanized steel ASTM A193 B7 or S.S. B8M	Galvanized steel ASTM A193 B7 or S.S. B8M	Galvanized steel ASTM A193 B7 or S.S. B8M
11	Nut	Galvanized steel ASTM A194 2H or S.S. Gr.8M	Galvanized steel ASTM A194 2H or S.S. Gr.8M	Galvanized steel ASTM A194 2H or S.S. Gr.8M

Nota: Combinazioni materiali non standard a richiesta
Note: Combinations non standard materials on request

Valvole a globo - Globe valves
Classe / Class - ANSI300

Tab.188G

Esecuzione a richiesta
On request execution

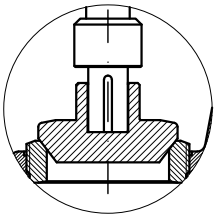

Semi automatica (SDNR)

Conform to:
Test API 598
MSS SP61
ANSI B16.10
FF or RF FLANGES

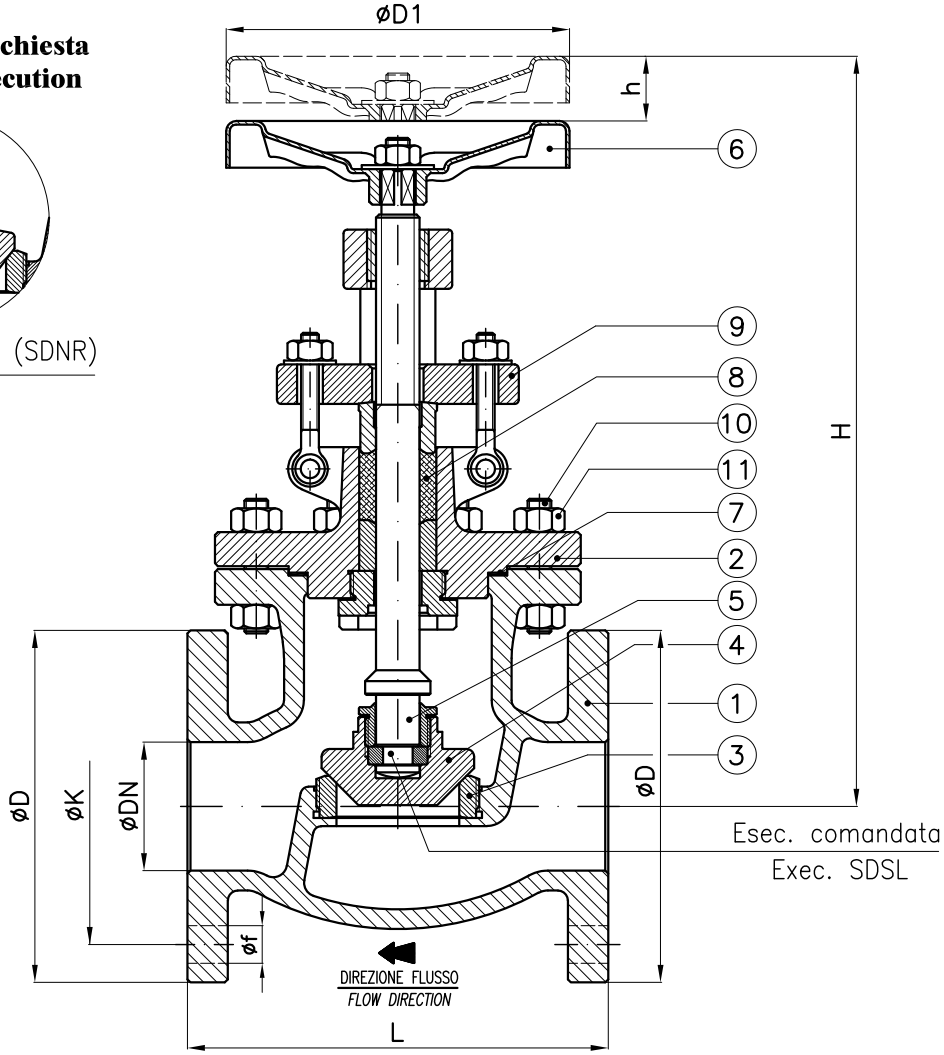

DN	D1	h (~)	H (~)	L	D	K	f	Holes NO. f	Weight (Kg)
2”	200	35	380	266.7	165.1	127.0	19	8	
2”1/2	300	35	460	292.0	190.5	149.2	22	8	
3”	300	35	500	317.4	209.5	168.3	22	8	
4”	400	40	600	355.5	254.0	200.0	22	8	
5”	500	55	630	400.0	279.4	234.9	22	8	
6”	575	75	720	444.4	317.5	269.9	22	12	
8”		80	860	558.7	381.0	330.2	25	12	
10”				622.2	444.5	387.4	29	16	
12”				711.1	520.7	450.9	32	16	

Combinazione materiali standard – Standard Combination materials

		G/316	G/B			G/316	G/B
ITEM	DENOMINAZIONE DENOMINATION	MATERIALE MATERIAL	MATERIALE MATERIAL	ITEM	DENOMINAZIONE DENOMINATION	MATERIALE MATERIAL	MATERIALE MATERIAL
01	Body	Cast iron ASTM A126 GrB	Cast iron ASTM A126 GrB	06	Handwheel	Sheet of carbon steel	Sheet of carbon steel
02	Bonnet	Cast iron ASTM A126 GrB	Cast iron ASTM A126 GrB	07	Gasket	Planiflex KG carbo/C PF81	Planiflex KG carbo/C PF81
03	Body seat	Stainless steel ASTM A182 (F316)	Bronze ASTM B62	08	Paking	Carbograph GR8800	Carbograph GR8800
04	Disc (≤ DN3”)	Stainless steel ASTM A182 (F316)	Bronze ASTM B62	09	Gland bushing	Cast steel ASTM A105	Bronze ASTM B62
04	Disc (≥ DN4”)	Cast steel ASTM A216 WCB plus A351 CF8M facing welding	Bronze ASTM B62	10	Bonnet stud bolt	ASTM A193 B7	ASTM A193 B7
05	Stem	Stainless steel ASTM A182 (F316)	Bronze ASTM B62	11	Nut	ASTM A194 2H	ASTM A194 2H

Nota: Combinazioni materiali non standard a richiesta
Note: Combinations non standard materials on request

Valvole a globo - Globe valves
Classe / Class - ANSI300

Tab.188GS

Conform to:
Test API 598
MSS SP61
ANSI B16.10
FF or RF FLANGES

Esecuzione a richiesta
On request execution

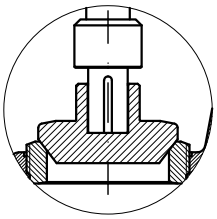

Semi automatica (SDNR)

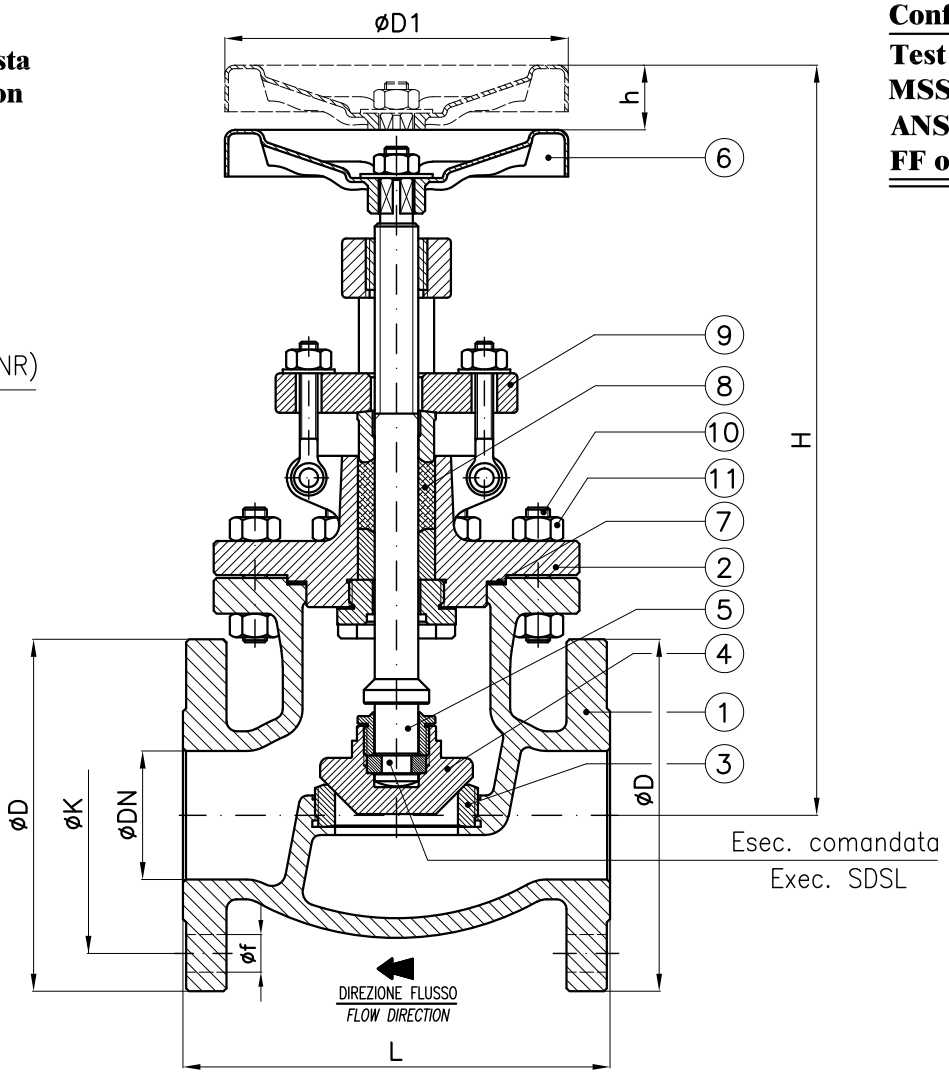

DN	D1	h (~)	H (~)	L	D	K	f	Holes NO. f	Weight (Kg)
2”	200	35	380	266.7	165.1	127.0	19	8	
2”1/2	300	35	460	292.0	190.5	149.2	22	8	
3”	300	35	500	317.4	209.5	168.3	22	8	
4”	400	40	600	355.5	254.0	200.0	22	8	
5”	500	55	630	400.0	279.4	234.9	22	8	
6”	575	75	720	444.4	317.5	269.9	22	12	
8”		80	860	558.7	381.0	330.2	25	12	
10”				622.2	444.5	387.4	29	16	
12”				711.1	520.7	450.9	32	16	

Combinazione materiali standard – Standard Combination materials

		GS/316	GS/B			GS/316	GS/B
ITEM	DENOMINAZIONE DENOMINATION	MATERIALE MATERIAL	MATERIALE MATERIAL	ITEM	DENOMINAZIONE DENOMINATION	MATERIALE MATERIAL	MATERIALE MATERIAL
01	Body	Nodular cast iron ASTM A395	Nodular cast iron ASTM A395	06	Handwheel	Sheet of carbon steel	Sheet of carbon steel
02	Bonnet	Nodular cast iron ASTM A395	Nodular cast iron ASTM A395	07	Gasket	Planiflex KG carbo/C PF81	Planiflex KG carbo/C PF81
03	Body seat	Stainless steel ASTM A182 (F316)	Bronze ASTM B62	08	Paking	Carbograph GR8800	Carbograph GR8800
04	Disc (≤ DN3”)	Stainless steel ASTM A182 (F316)	Bronze ASTM B62	09	Gland bushing	Cast steel ASTM A105	Bronze ASTM B62
04	Disc (≥ DN4”)	Cast steel ASTM A216 WCB plus A351 CF8M facing welding	Bronze ASTM B62	10	Bonnet stud bolt	ASTM A193 B7	ASTM A193 B7
05	Stem	Stainless steel ASTM A182 (F316)	Bronze ASTM B62	11	Nut	ASTM A194 2H	ASTM A194 2H

Nota: Combinazioni materiali non standard a richiesta
Note: Combinations non standard materials on request

Valvole a globo serie ANSI150-300 RF, 800LBS SW-BW
Globe valves type ANSI150-300 RF, 800LBS SW-BW

Tab.199GL

Conform to:
ANSI B16.5
NE421245
NE423245

Tab.199GL–FL

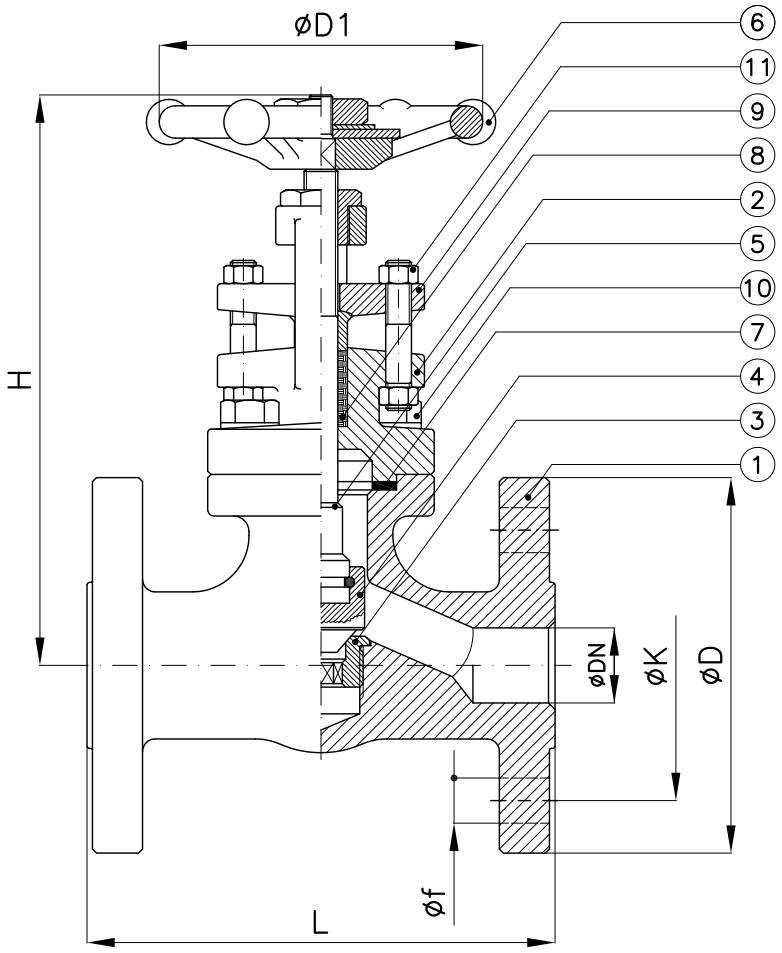

Tab.199GL

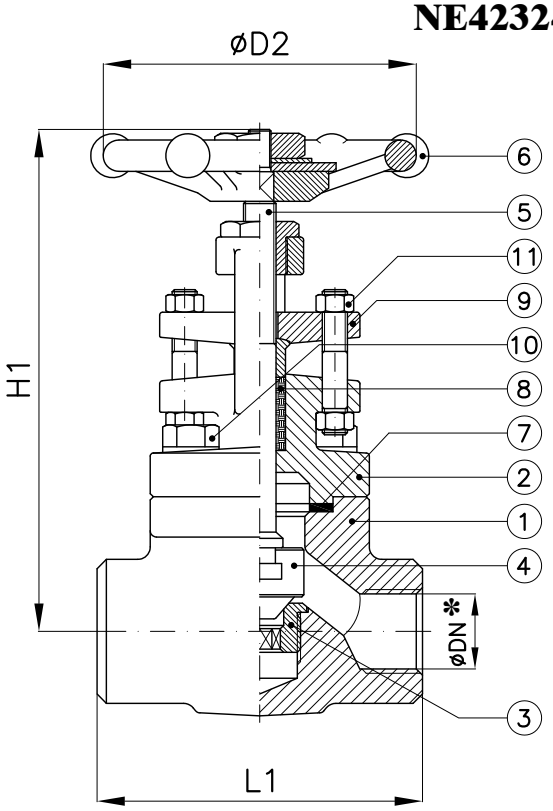

✻: Filettatura GAS
✻: *BSPP threaded*

	ANSI150								ANSI300											CLASS 800			
									Tab199GL–FL Type "A"			Tab199GL–FL Type "B"											
DN	D1	H max(≃) aperta/open	L	D	K	f	Holes NO. f	Weight (Kg)	D1	H max(≃) aperta/open	Weight (Kg)	D1	H max(≃) aperta/open	Weight (Kg)	L	D	K	f	Holes NO. f	D2	H1 max(≃) aperta/open	L1	Weight (Kg)
1/4"	–	–	–	–	–	–	–	–	–	–	–				–	–	–	–	–	80	155	80	1.8
3/8"	–	–	–	–	–	–	–	–	–	–	–				–	–	–	–	–	80	160	80	1.8
1/2"	80	185	108	88.9	60	16	4	3.2	85	170	3.6	90	200	4.1	152	95	67	16	4	80	160	80	2
3/4"	80	195	118	98.4	70	16	4	4.3	85	175	5	90	205	6	178	117	83	19	4	80	170	90	3.3
1"	100	220	127	108	79	16	4	5.9	105	195	7.4	100	230	8.3	203	124	89	19	4	100	200	110	5.4
1"1/4	140	220	140	118	89	16	4	10	135	230	10	–	–	–	216	133	98	19	4	120	235	127	7.9
1"1/2	140	270	165	127	98	16	4	10.8	135	245	13.8	140	285	15.5	229	156	114	22	4	140	270	155	10.8
2"	170	295	203	152	121	19	4	18	155	285	19.4	175	325	21.5	267	165	127	19	8	170	290	170	19

Combinazione materiali standard – Standard materials Combination

ITEM	DENOMINAZIONE DENOMINATION	A/420 MATERIALE MATERIAL	316/316 MATERIALE MATERIAL	ITEM	DENOMINAZIONE DENOMINATION	A/420 MATERIALE MATERIAL	316/316 MATERIALE MATERIAL
01	Body	Forged steel ASTM A105N	Stainless steel ASTM A182 (F316)	07	Gasket	F316 + Graphite	F316 + Graphite
02	Bonnet	Forged steel ASTM A105N	Stainless steel ASTM A182 (F316)	08	Packing	Graphoil	Graphoil
03	Body seat	Stainless steel ASTM A182 (F6)	Stainless steel ASTM A182 (F316)	09	Gland bushing	Forged steel ASTM A105N	Stainless steel ASTM A182 (F316)
04	Disc	Stainless steel ASTM A182 (F6)	Stainless steel ASTM A182 (F316)	10	Bonnet stud bolt	ASTM A193 B7	Stainless steel B8M
05	Stem	Stainless steel ASTM A182 (F6)	Stainless steel ASTM A182 (F316)	11	Nut	ASTM A194 2H	Stainless steel Gr.8M
06	Handwheel	Sheet of carbon steel	Sheet of carbon steel				

Nota: Combinazioni materiali non standard a richiesta
Note: Non standard materials combinations on request

www.medanaevisca.it

Valvole con attacco per tubi flessibili PN10M.M.I.-PN6-PN16-PN10DIN
Stop valves with connection for fire hose NP10M.M.I.-NP6-NP16-NP10DIN

Tab.114

Conform to:
UNI EN1092

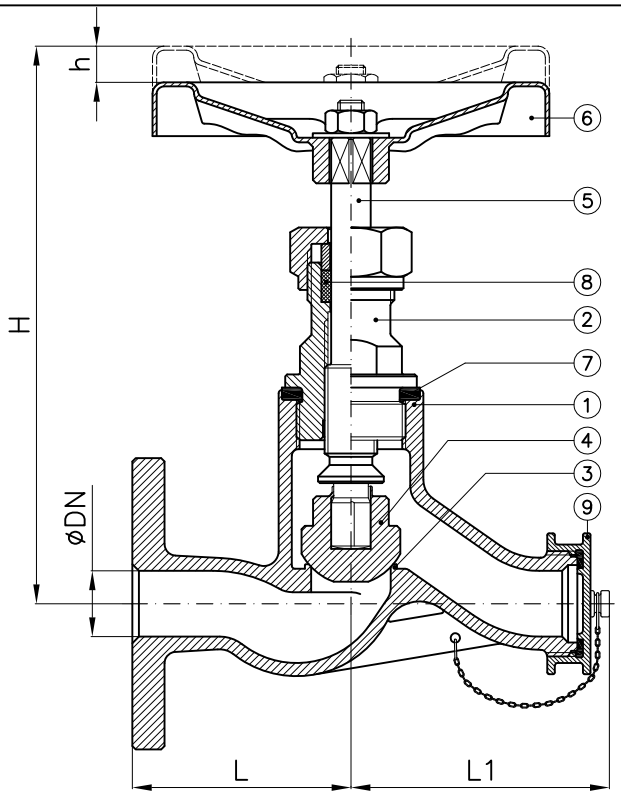

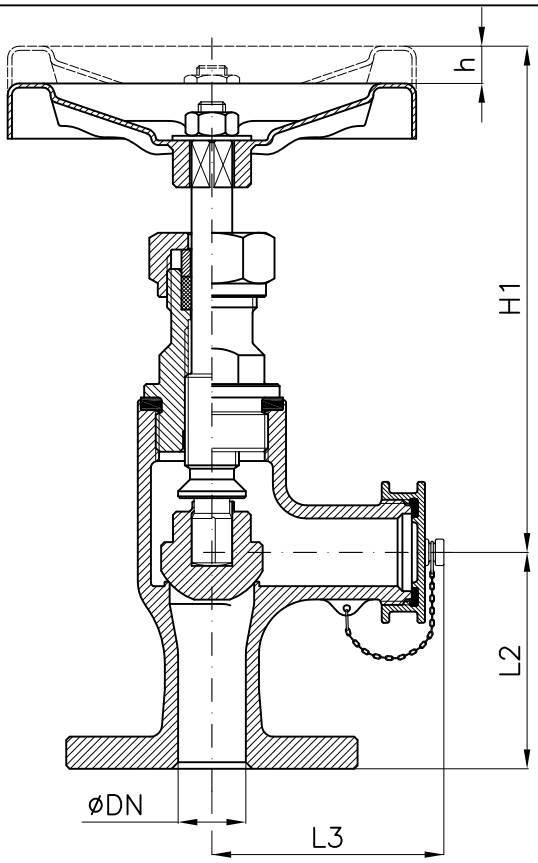

Tab.114V	
Tipo a via diritta comandata (SDSL) o semiautomatica (SDNR)	UNI 2857 – UNAV 8565
Straight type with fixed disk (SDSL) or with loose disc (SDNR)	

Tab.114A	
Tipo ad angolo retto comandata (SDSL) o semiautomatica (SDNR)	UNI 2859 – UNAV 8565
Angle type with fixed disk (SDSL) or with loose disc (SDNR)	

DN	Tappo Plug	L	L1	L2	L3	H (~)	H1 (~)	h (~)	Weight (Kg)
20	M34x3	65	80	60	75	165	150	10	2
25	M34x3	65	80	60	75	165	150	10	2.5

Esecuzioni/Executions				
DN	PN6	PN10DIN	PN16	PN10M.M.I.
20	*	*	*	
25	*	*	*	*

Flange di connessione/Connection flange:

a) Esecuzione con flangia ovale (Tab.103)
Execution with oval flange (Tab.103)

b) Esecuzione con flangia M.M.I. (Tab.102)
Execution with M.M.I. flange (Tab.102)

c) Esecuzione con flange tonde PN6 PN10DIN PN16 (Tab.100)
Execution with NP6 NP10DIN NP16 round flanges (Tab.100)

Combinazione materiali standard – Standard materials Combination						
		B/B	B/316	N/316	N/M	A/316
ITEM	DENOMINAZIONE DENOMINATION	MATERIALE MATERIAL	MATERIALE MATERIAL	MATERIALE MATERIAL	MATERIALE MATERIAL	MATERIALE MATERIAL
01	Body	Bronze UNI EN1982 G-CuSn5Zn5Pb5	Bronze UNI EN1982 G-CuSn5Zn5Pb5	Bronze UNI EN1982 G-CuSn10Zn2Ni2	Bronze UNI EN1982 G-CuSn10Zn2Ni2	Cast steel GP240-GH UNI EN10213
02	Bonnet	Bronze UNI EN1982 G-CuSn5Zn5Pb5	Bronze UNI EN1982 G-CuSn5Zn5Pb5	Bronze UNI EN1982 G-CuSn10Zn2Ni2	Bronze UNI EN1982 G-CuSn10Zn2Ni2	Carbon steel GE240 UNI EN10293
03	body seat	Bronze UNI EN1982 G-CuSn5Zn5Pb5	Bronze UNI EN1982 G-CuSn5Zn5Pb5	Bronze UNI EN1982 G-CuSn10Zn2Ni2	Bronze UNI EN1982 G-CuSn10Zn2Ni2	Stainless steel AISI316 UNI EN10088
04	Disc	Bronze UNI EN1982 G-CuSn5Zn5Pb5	Stainless steel AISI316 UNI EN10088	Stainless steel AISI316 UNI EN10088	Monel K500 BS 3076 NA18 (2.4375)	Stainless steel AISI316 UNI EN10088
05	Stem	Brass CW617N (OT58)	Stainless steel AISI316 UNI EN10088	Stainless steel AISI316 UNI EN10088	Monel K500 BS 3076 NA18 (2.4375)	Stainless steel AISI316 UNI EN10088
06	Handwheel	Sheet of carbon steel	Sheet of carbon steel	Sheet of carbon steel	Sheet of carbon steel	Sheet of carbon steel
07	Gasket	Planiflex KG carbo/C PF81	Planiflex KG carbo/C PF81	Planiflex KG carbo/C PF81	Planiflex KG carbo/C PF81	Planiflex KG carbo/C PF81
08	Packing	Carbograph GR8800	Carbograph GR8800	Carbograph GR8800	Carbograph GR8800	Carbograph GR8800
09	Plug	Brass CW509L (OT60)	Brass CW509L (OT60)	Brass CW509L (OT60)	Brass CW509L (OT60)	Brass CW509L (OT60)

Nota: Combinazioni materiali non standard a richiesta
Note: Non standard materials combinations on request

Valvole con attacco per tubi flessibili PN10M.M.I.-PN6-PN16-PN10DIN
Stop valves with connection for fire hose NP10M.M.I.-NP6-NP16-NP10DIN

Tab.115

Conform to:
UNI EN1092

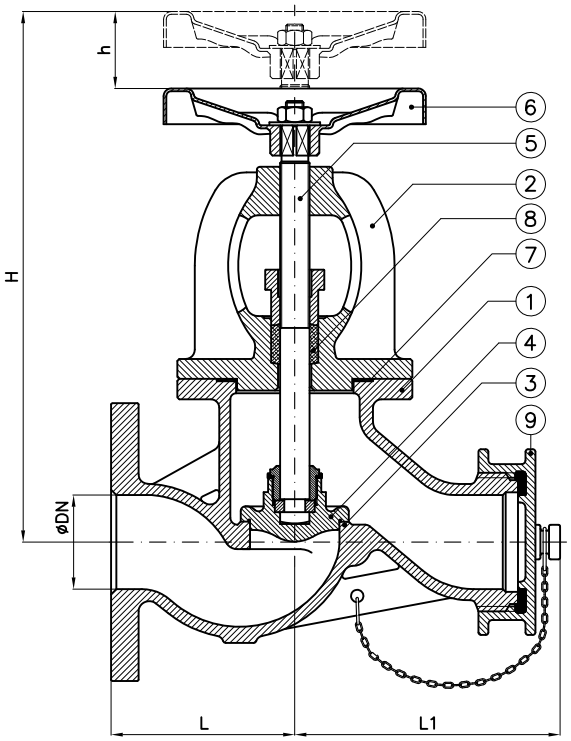

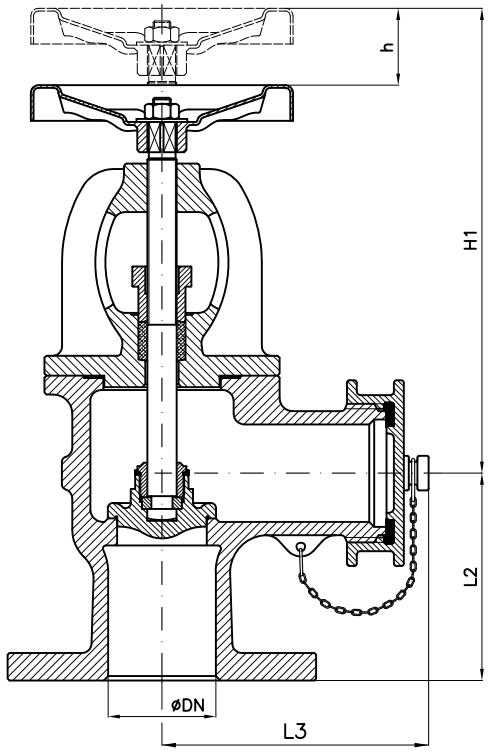

Tab.115V	
Tipo a via diritta comandata (SDSL) o semiautomatica (SDNR) Straight type with fixed disk (SDSL) or with loose disc (SDNR)	UNI 2858 – UNAV 8565

Tab.115A	
Tipo ad angolo retto comandata (SDSL) o semiautomatica (SDNR) Angle type with fixed disk (SDSL) or with loose disc (SDNR)	UNI 2860 – UNAV 8565

DN	Tappo Plug	L	L1	L2	L3	H (~)	H1 (~)	h (~)	Weight (Kg)
40	M56x4	90	120	75	100	250	220	20	7.5
50	M56x4	100	125	100	115	270	230	25	12
60	M85x6	115	155	100	140	290	260	28	14
65	M85x6	115	155	100	140	290	260	28	14
70	M85x6	115	155	100	140	290	260	28	14

Esecuzioni/Executions				
DN	PN6	PN10DIN	PN16	PN10M.M.I.
40	*	*	*	*
50	*	*	*	
60				*
65	*	*	*	
70				*

Flange di connessione/Connection flange:

a) Esecuzione con flangia ovale (Tab.103)
Execution with oval flange (Tab.103)

b) Esecuzione con flangia M.M.I. (Tab.102)
Execution with M.M.I. flange (Tab.102)

c) Esecuzione con flange tonde PN6 PN10DIN PN16 (Tab.100)
Execution with NP6 NP10DIN NP16 round flanges (Tab.100)

Combinazione materiali standard – Standard materials Combination						
		B/B	B/316	N/316	N/M	A/316
ITEM	DENOMINAZIONE DENOMINATION	MATERIALE MATERIAL	MATERIALE MATERIAL	MATERIALE MATERIAL	MATERIALE MATERIAL	MATERIALE MATERIAL
01	Body	Bronze UNI EN1982 G-CuSn5Zn5Pb5	Bronze UNI EN1982 G-CuSn5Zn5Pb5	Bronze UNI EN1982 G-CuSn10Zn2Ni2	Bronze UNI EN1982 G-CuSn10Zn2Ni2	Cast steel GP240-GH UNI EN10213
02	Bonnet	Bronze UNI EN1982 G-CuSn5Zn5Pb5	Bronze UNI EN1982 G-CuSn5Zn5Pb5	Bronze UNI EN1982 G-CuSn10Zn2Ni2	Bronze UNI EN1982 G-CuSn10Zn2Ni2	Carbon steel GE240 UNI EN10293
03	body seat	Bronze UNI EN1982 G-CuSn5Zn5Pb5	Bronze UNI EN1982 G-CuSn5Zn5Pb5	Bronze UNI EN1982 G-CuSn10Zn2Ni2	Bronze UNI EN1982 G-CuSn10Zn2Ni2	Stainless steel AISI316 UNI EN10088
04	Disc	Bronze UNI EN1982 G-CuSn5Zn5Pb5	Stainless steel AISI316 UNI EN10088	Stainless steel AISI316 UNI EN10088	Monel K500 BS 3076 NA18 (2.4375)	Stainless steel AISI316 UNI EN10088
05	Stem	Brass CW617N (OT58)	Stainless steel AISI316 UNI EN10088	Stainless steel AISI316 UNI EN10088	Monel K500 BS 3076 NA18 (2.4375)	Stainless steel AISI316 UNI EN10088
06	Handwheel	Sheet of carbon steel	Sheet of carbon steel	Sheet of carbon steel	Sheet of carbon steel	Sheet of carbon steel
07	Gasket	Planiflex KG carbo/C PF81	Planiflex KG carbo/C PF81	Planiflex KG carbo/C PF81	Planiflex KG carbo/C PF81	Planiflex KG carbo/C PF81
08	Packing	Carbograph GR8800	Carbograph GR8800	Carbograph GR8800	Carbograph GR8800	Carbograph GR8800
09	Plug	Brass CW509L (OT60)	Brass CW509L (OT60)	Brass CW509L (OT60)	Brass CW509L (OT60)	Brass CW509L (OT60)

Nota: Combinazioni materiali non standard a richiesta
Note: Non standard materials combinations on request

LLOYD'S REGISTER fire test: MLN0401710/1-2

BS 5041-1 (Drawing No. 480A)

Conform to:
UNI EN1092
NE457822
NE457842

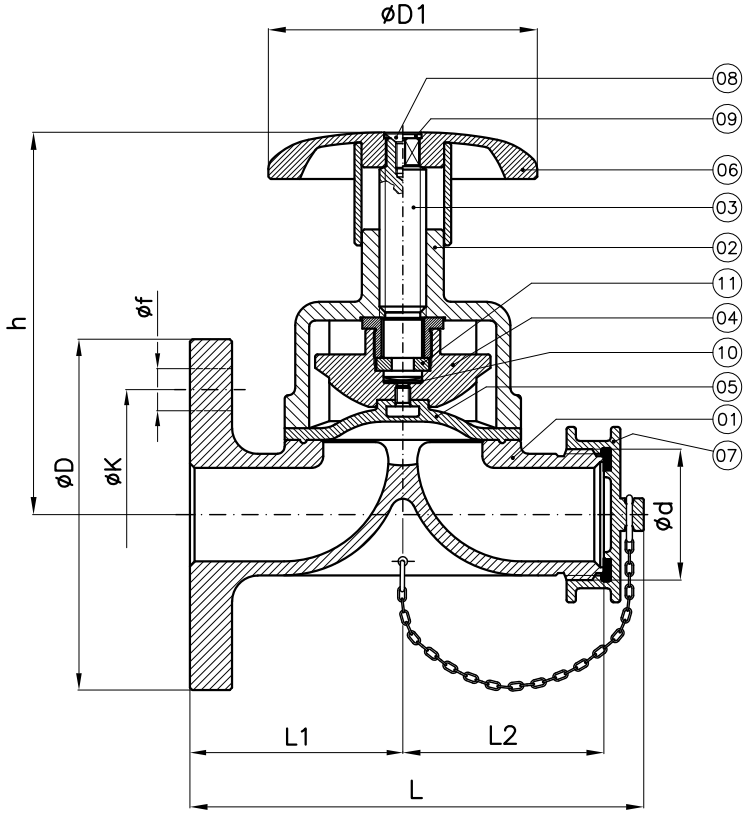

Tab115.VM

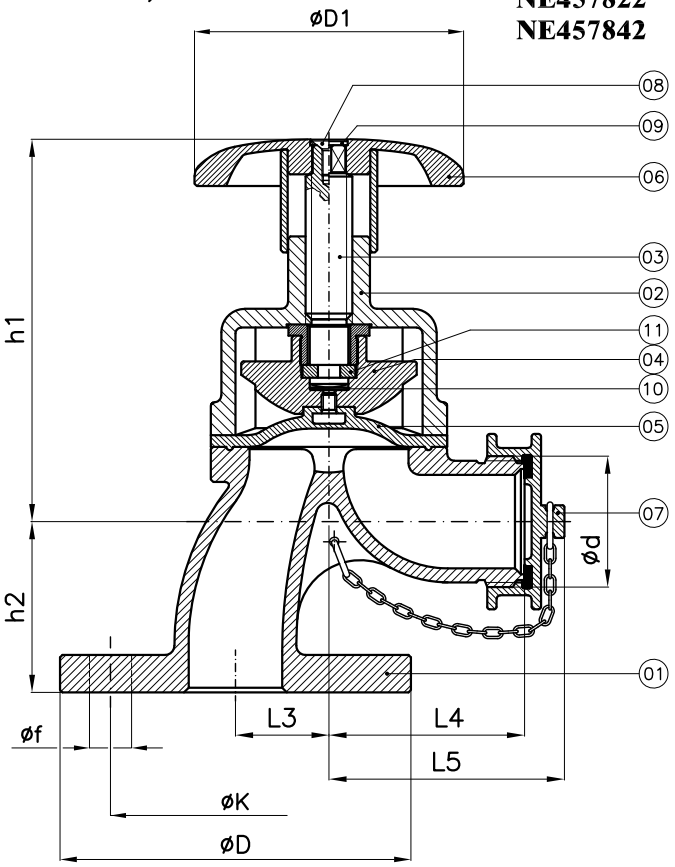

Tab115.AM

DN	D1	h chiusa close	h aperta open	h1 chiusa close	h1 aperta open	h2	L	L1	L2	L3	L4	L5	Weight (Kg)	PN6-NP6 D	PN6-NP6 K	PN6-NP6 f	PN6-NP6 Holes NO. f	PN10-NP10 D	PN10-NP10 K	PN10-NP10 f	PN10-NP10 Holes NO. f	PN16-NP16 D	PN16-NP16 K	PN16-NP16 f	PN16-NP16 Holes NO. f
40(115VM)	115	146	165	–	–	–	195	90	85	–	–	–	9	130	100	14	4	150	110	18	4	150	110	18	4
40(115AM)	115	–	–	146	165	72	–	–	–	40	85	105	10	130	100	14	4	150	110	18	4	150	110	18	4
65(115VM)	115	155	180	–	–	–	275	130	120	–	–	–	15	160	130	14	4	185	145	18	4	185	145	18	4
65(115AM)	115	–	–	155	180	75	–	–	–	50	110	135	15	160	130	14	4	185	145	18	4	185	145	18	4

DN	Fire hose connection		
	ød EXEC. A	ød EXEC. B	ød EXEC. C
40(115VM) 40(115AM)	GAS plug 2"GAS (BSP)	M56x4 (UNI45) with UNI plug	9 threads per inch with NH plug (1"1/2NH)
65(115VM) 65(115AM)	GAS plug 2"1/2GAS (BSP)	M85x6 (UNI70) with UNI plug	7,5 threads per inch with NH plug (2"1/2NH)

Combinazione materiali standard – Standard materials Combination					
		B/O			B/O
ITEM	DENOMINAZIONE DENOMINATION	MATERIALE MATERIAL	ITEM	DENOMINAZIONE DENOMINATION	MATERIALE MATERIAL
01	Body	Bronze UNI EN1982 G-CuSn5Zn5Pb5	07	Screw plug	Brass CW509L (OT60)
02	Bonnet	Bronze UNI EN1982 G-CuSn5Zn5Pb5	08	Screw M6x16	Stainless steel AISI316 UNI EN10088
03	Stem	Brass CW617N (OT58)	09	Washer UNI6592	Stainless steel AISI316 UNI EN10088
04	Disc	Bronze UNI EN1982 G-CuSn5Zn5Pb5	10	Bearing bush	PTFE
05	Membrane	EPDM HT	11	Split collet	Brass CW617N (OT58)
06	Handwheel	Brass CW509L (OT60)			
Nota: Note:	Combinazioni materiali non standard a richiesta Non standard materials combinations on request				

LLOYD'S REGISTER fire test: MLN0401710/1-2

BS 5041-1 (Drawing No. 480A)

Conform to:
UNI EN1092

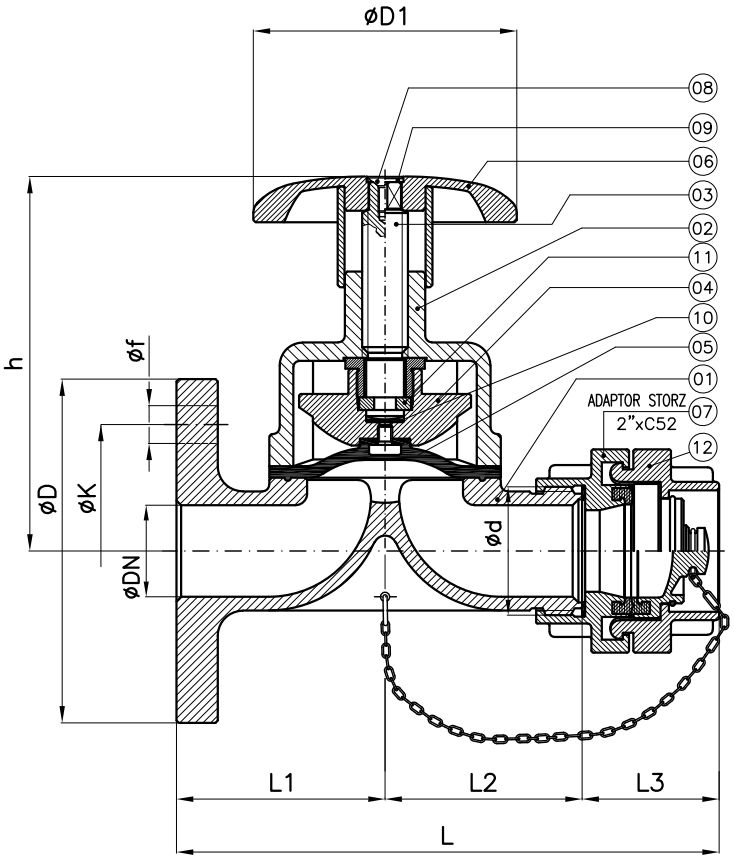

Tab115.VM-STORZ

DN40

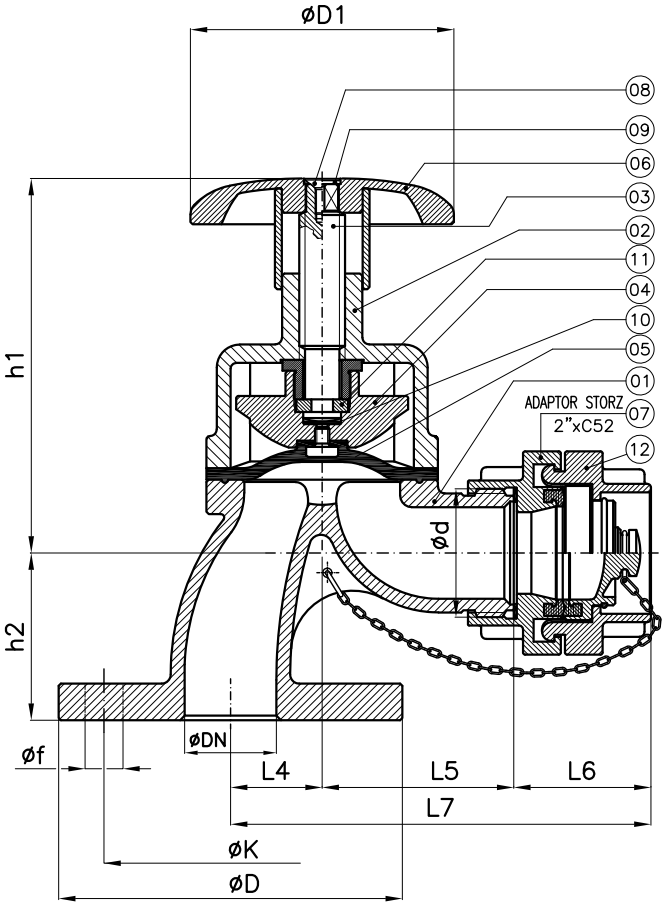

Tab115.AM-STORZ

DN40

																PN6-NP6				PN10-NP10				PN16-NP16			
DN	D1	h chiusa *close*	h aperta *open*	h1 chiusa *close*	h1 aperta *open*	h2	L	L1	L2	L3	L4	L5	L6	L7	Weight (Kg)	D	K	f	Holes NO. f	D	K	f	Holes NO. f	D	K	f	Holes NO. f
40(115VM)-storz	115	146	165	–	–	–	240	90	85	65	–	–	–	–	11	130	100	14	4	150	110	18	4	150	110	18	4
40(115AM)-storz	115	–	–	146	165	72	–	–	–	–	40	85	65	190	12	130	100	14	4	150	110	18	4	150	110	18	4

DN	Fire hose connection ød
40(115VM)-storz	2"Gas Thd/Male with STORZ C52
40(115AM)-storz	

Combinazione materiali standard - Standard materials Combination					
		B/O			B/O
ITEM	DENOMINAZIONE DENOMINATION	MATERIALE MATERIAL	ITEM	DENOMINAZIONE DENOMINATION	MATERIALE MATERIAL
01	Body	Bronze UNI EN1982 G-CuSn5Zn5Pb5	07	Adaptor storz	Brass CW509L (OT60)
02	Bonnet	Bronze UNI EN1982 G-CuSn5Zn5Pb5	08	Screw M6x16	Stainless steel AISI316 UNI EN10088
03	Stem	Brass CW617N (OT58)	09	Washer UNI6592	Stainless steel AISI316 UNI EN10088
04	Disc	Bronze UNI EN1982 G-CuSn5Zn5Pb5	10	Bearing bush	PTFE
05	Membrane	EPDM HT	11	Split collet	Brass CW617N (OT58)
06	Handwheel	Brass CW509L (OT60)	12	Blank cap storz	Brass CW509L (OT60)
Nota: Note:	Combinazioni materiali non standard a richiesta Non standard materials combinations on request				

LLOYD'S REGISTER fire test: MLN0401710/1-2

BS 5041-1 (Drawing No. 480A)

Conform to:
UNI EN1092

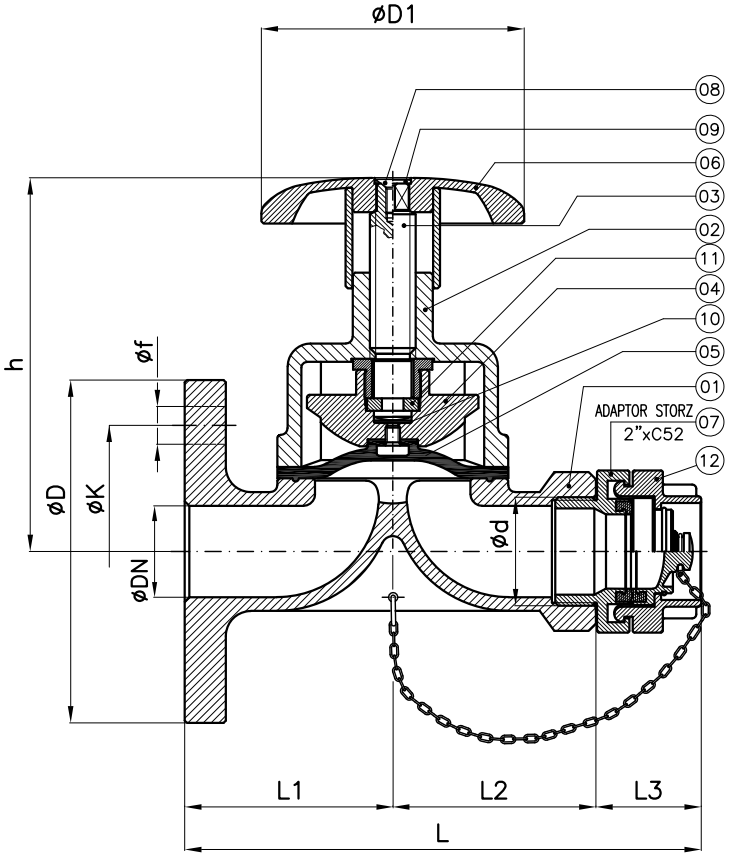

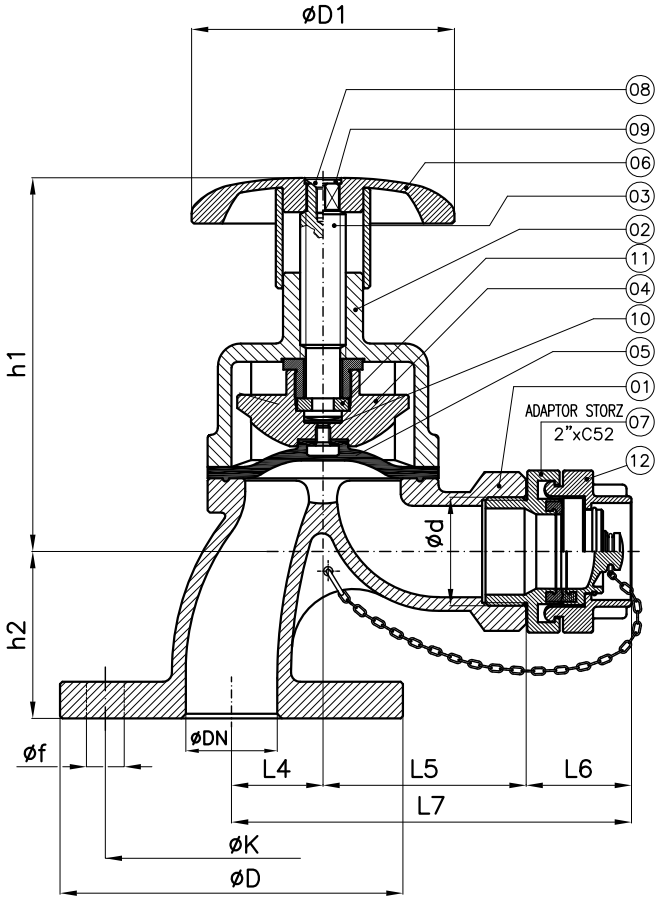

Tab115.VM-STORZ

DN65

Tab115.AM-STORZ

DN65

																PN6-NP6				PN10-NP10				PN16-NP16			
DN	D1	h chiusa *close*	h aperta *open*	h1 chiusa *close*	h1 aperta *open*	h2	L	L1	L2	L3	L4	L5	L6	L7	Weight (Kg)	D	K	f	Holes NO. f	D	K	f	Holes NO. f	D	K	f	Holes NO. f
65(115VM)-storz	115	155	180	–	–	–	312	130	120	62	–	–	–	–	17	160	130	14	4	185	145	18	4	185	145	18	4
65(115AM)-storz	115	–	–	155	180	75	–	–	–	–	50	110	62	222	17	160	130	14	4	185	145	18	4	185	145	18	4

DN	Fire hose connection ød
65(115VM)-storz	2"Gas Thd/Female with STORZ C52
65(115AM)-storz	

Combinazione materiali standard – Standard materials Combination					
		B/O			B/O
ITEM	DENOMINAZIONE DENOMINATION	MATERIALE MATERIAL	ITEM	DENOMINAZIONE DENOMINATION	MATERIALE MATERIAL
01	Body	Bronze UNI EN1982 G-CuSn5Zn5Pb5	07	Adaptor storz	Brass CW509L (OT60)
02	Bonnet	Bronze UNI EN1982 G-CuSn5Zn5Pb5	08	Screw M6x16	Stainless steel AISI316 UNI EN10088
03	Stem	Brass CW617N (OT58)	09	Washer UNI6592	Stainless steel AISI316 UNI EN10088
04	Disc	Bronze UNI EN1982 G-CuSn5Zn5Pb5	10	Bearing bush	PTFE
05	Membrane	EPDM HT	11	Split collet	Brass CW617N (OT58)
06	Handwheel	Brass CW509L (OT60)	12	Blank cap storz	Brass CW509L (OT60)
Nota: Note:	Combinazioni materiali non standard a richiesta Non standard materials combinations on request				

Valvole a diaframma PN6-PN16 tipo KB
Diaphragm valves NP6-NP16 KB type

Tab.115 DIA/KB

Conform to:
UNI EN1092
NE407711

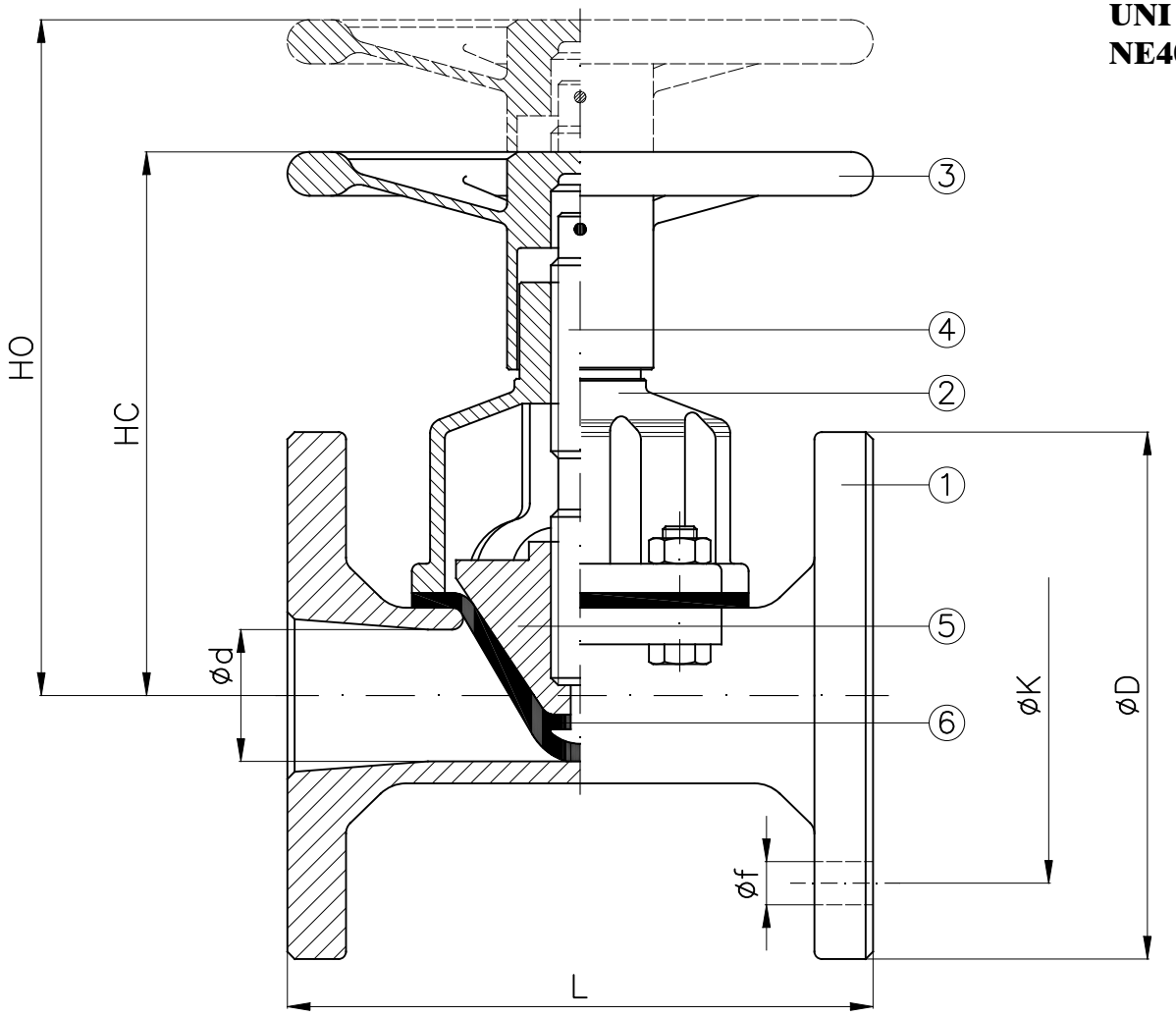

					PN6					PN16				
DN	HC (~) (close)	HO (~) (open)	L	ød	D	K	f	Holes NO. f	Weight (Kg)	D	K	f	Holes NO. f	Weight (Kg)
40	159	165	159	28	130	100	14	4	5.2	150	110	18	4	5.9
50	147	178	190	43	140	110	14	4	8.5	165	125	18	4	9.3
65	238	269	216	51	160	130	14	4	12	185	145	18	4	13.5
80	238	270	254	65	190	150	18	4	20	200	160	18	8	21.5
100	277	313	305	75	210	170	18	4	32	220	180	18	8	33.0

Combinazione materiali standard – Standard materials Combination		
		G/RUBBER
ITEM	DENOMINAZIONE DENOMINATION	MATERIALE MATERIAL
01	Body	Cast iron UNI EN1561 EN-GJL-250
02	Bonnet	Cast iron UNI EN1561 EN-GJL-250
03	Handwheel	Cast iron UNI EN1561 EN-GJL-250
04	Stem	Stainless steel AISI316 UNI EN10088
05	Disc	Cast iron UNI EN1561 EN-GJL-250
06	Diaphragm	Rubber IR/IIR (BUT)
Nota: Combinazioni materiali non standard a richiesta Note: Non standard materials combinations on request		

Conform to:
UNI EN1092

DN≤32

Flangia quadra
Square flange

PER DN15 ÷ 32 PN10M.M.I.
FOR ND15 ÷ 32 NP10M.M.I.

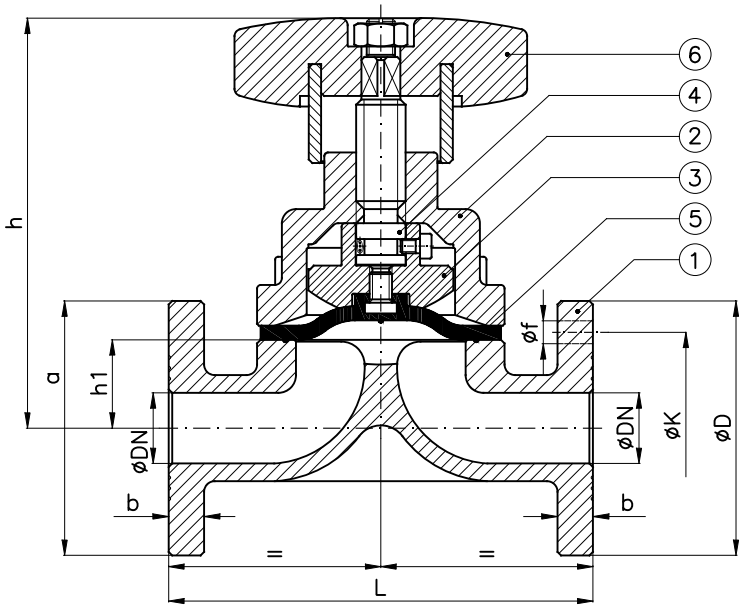

Flangia tonda
Round flange

PER PN6÷PN10DIN÷PN16
FOR NP6÷NP10DIN÷NP16

DN≥40

Flangia quadra
Square flange

PER DN40 ÷ 50 PN10M.M.I.
FOR ND40 ÷ 50 NP10M.M.I.

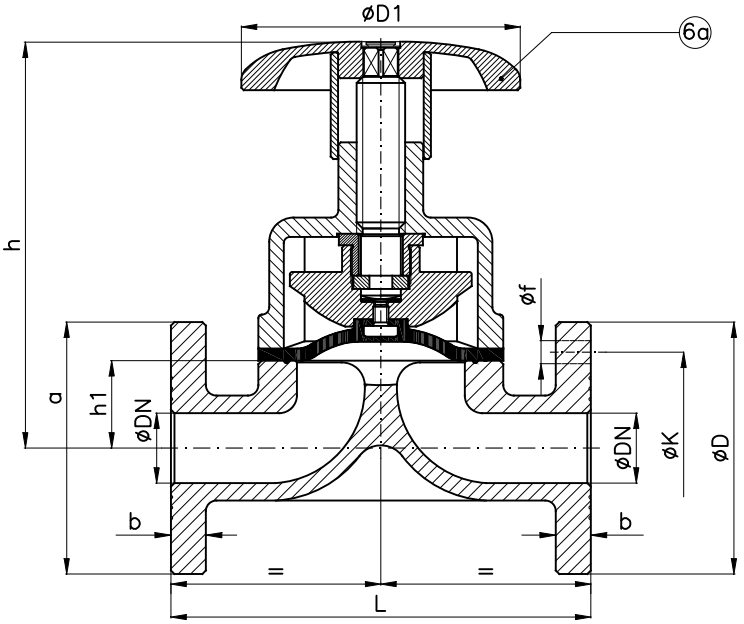

Flangia tonda
Round flange

PER DN60÷80 PN10M.M.I.
FOR ND60÷80 NP10M.M.I.

PER PN6÷PN10DIN÷PN16
FOR NP6÷NP10DIN÷NP16

						PN6 – NP6						PN10M.M.I. – NP10M.M.I.							PN10DIN/PN16 – NP10DIN/NP16					
DN	D1	h aperta *open*	h chiusa *close*	h1	L	b	D	K	f	Holes NO. f	Weight (Kg)	a	b	D	K	f	Holes NO. f	Weight (Kg)	b	D	K	f	Holes NO. f	Weight (Kg)
20	–	117	105	25	120		90	65	11	4		72	10	90	65	14	4	2		105	75	14	4	
25	–	119	107	27	130		100	75	11	4		78	10	95	70	14	4	2.5		115	85	14	4	
32	–	124	112	32	140		120	90	14	4		82	10	100	75	14	4	3		140	100	18	4	
40	115			32	180		130	100	14	4		85	12	110	85	14	4		18	150	110	18	4	
50					210		140	110	14	4		95	12	120	95	14	4		18	165	125	18	4	
60						–	–	–	–	–	–								–	–	–	–	–	–
65	115			41	260		160	130	14	4		–	–	–	–	–	–	–	19	185	145	18	4	
70						–	–	–	–	–	–	–		140	115	14	6		–	–	–	–	–	–
80					280		190	150	18	4		–		155	130	14	8			200	160	18	8	

Combinazione materiali standard – Standard materials Combination		
		B/RUBBER
ITEM	**DENOMINAZIONE DENOMINATION**	**MATERIALE MATERIAL**
01	Body	Bronze UNI EN1982 G-CuSn5Zn5Pb5
02	Bonnet	Bronze UNI EN1982 G-CuSn5Zn5Pb5
03	Disc	Brass CW617N (OT58)
04	Stem	Brass CW617N (OT58)
05	Diaphragm	EPDM HT
06	Handwheel	Duroplast
06a	Handwheel	Brass CW617N (OT58)
Nota: Combinazioni materiali non standard a richiesta **Note: Non standard materials combinations on request**		

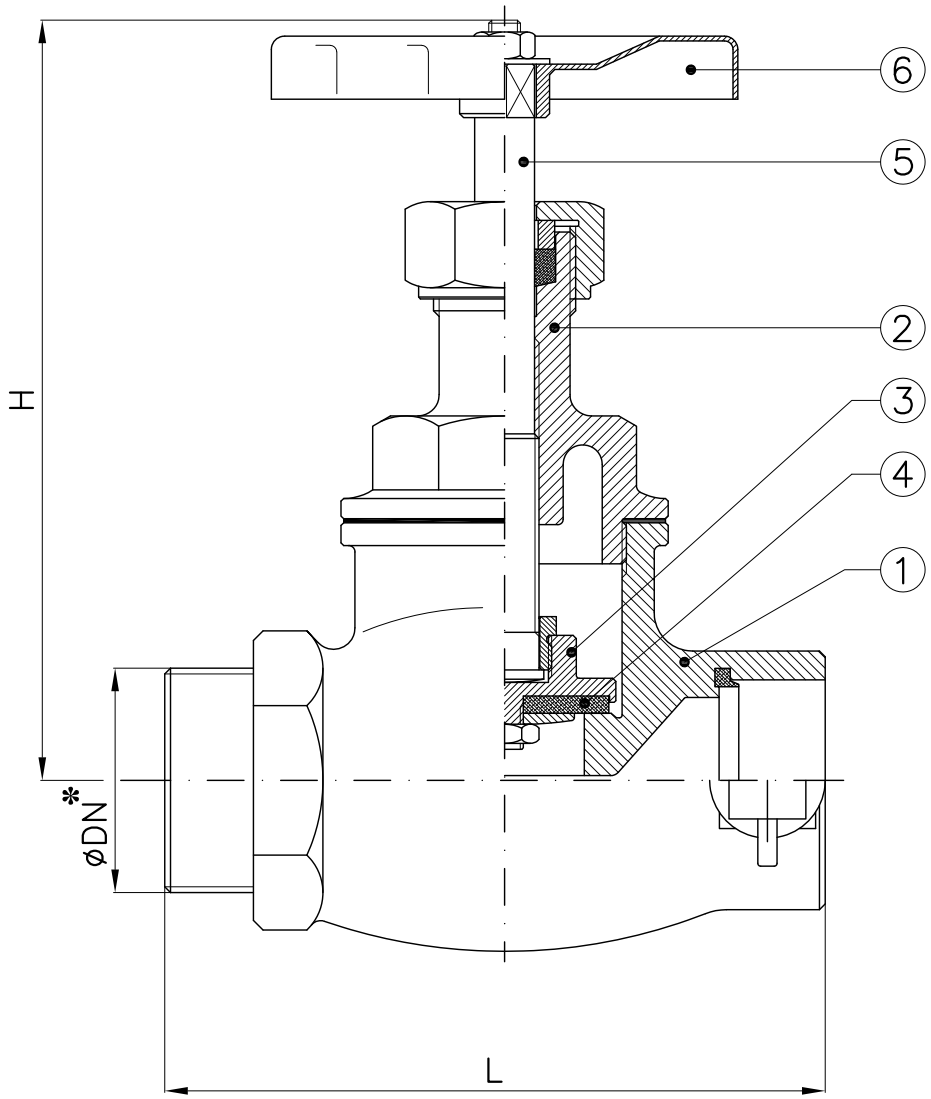

*: Filettatura GAS
*: *BSPP threaded*

DN	H (~)	L (~)
2"1/2	230	180

Combinazione materiali standard – Standard materials Combination		
		B/O
ITEM	DENOMINAZIONE DENOMINATION	MATERIALE MATERIAL
01	Body	Bronze UNI EN1982 G-CuSn5Zn5Pb5
02	Bonnet	Brass CW617N (OT58)
03	Disc	Brass CW617N (OT58)
04	Sealing seat	PTFE
05	Stem	Brass CW617N (OT58)
06	Handwheel	Sheet of carbon steel
Nota: Combinazioni materiali non standard a richiesta Note: Non standard materials combinations on request		

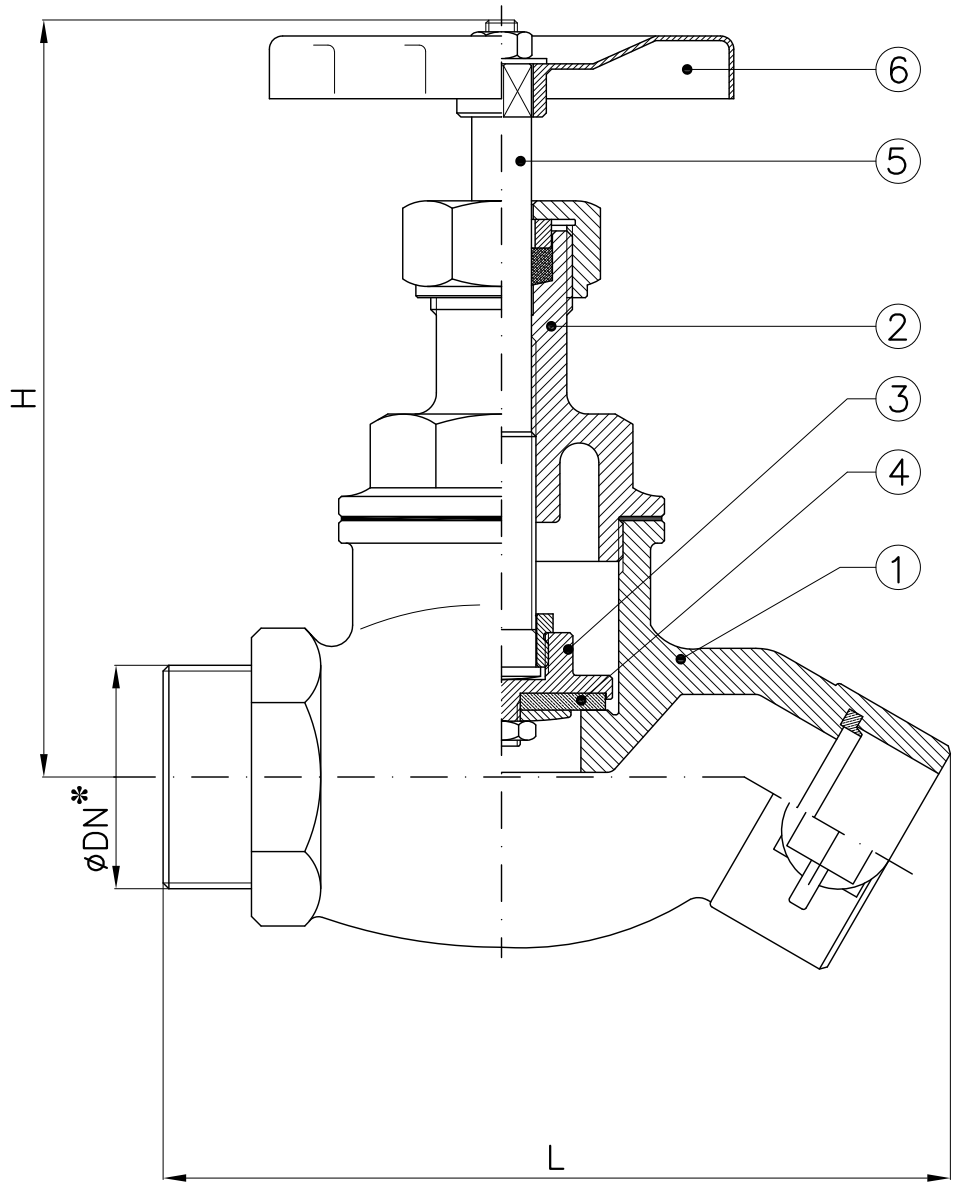

*: Filettatura GAS
*: *BSPP threaded*

DN	H (~)	L (~)
2"1/2	230	230

Combinazione materiali standard – Standard materials Combination		
		B/O
ITEM	DENOMINAZIONE DENOMINATION	MATERIALE MATERIAL
01	Body	Bronze UNI EN1982 G-CuSn5Zn5Pb5
02	Bonnet	Brass CW617N (OT58)
03	Disc	Brass CW617N (OT58)
04	Sealing seat	PTFE
05	Stem	Brass CW617N (OT58)
06	Handwheel	Sheet of carbon steel
Nota: Combinazioni materiali non standard a richiesta Note: Non standard materials combinations on request		

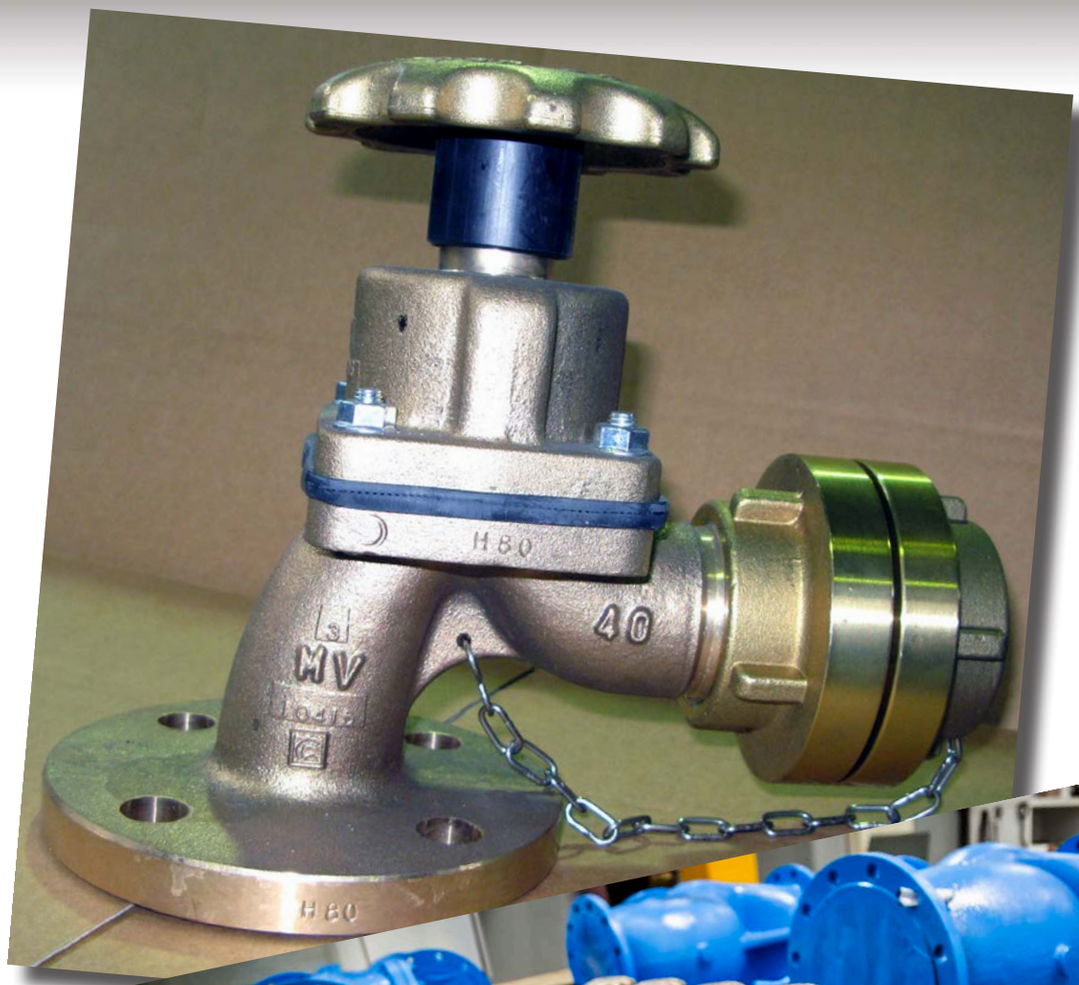
H80
40
MV
H80

Valvole a rapida chiusura a mezzo cavo metallico PN6-PN16-ANSI150
Quick closing valves by means of metallic cable NP6-NP16-ANSI150

Tab.131

RF FLANGES: A/GS
FF FLANGES: B/G

Conform to:
UNI EN1092
ANSI B16.5

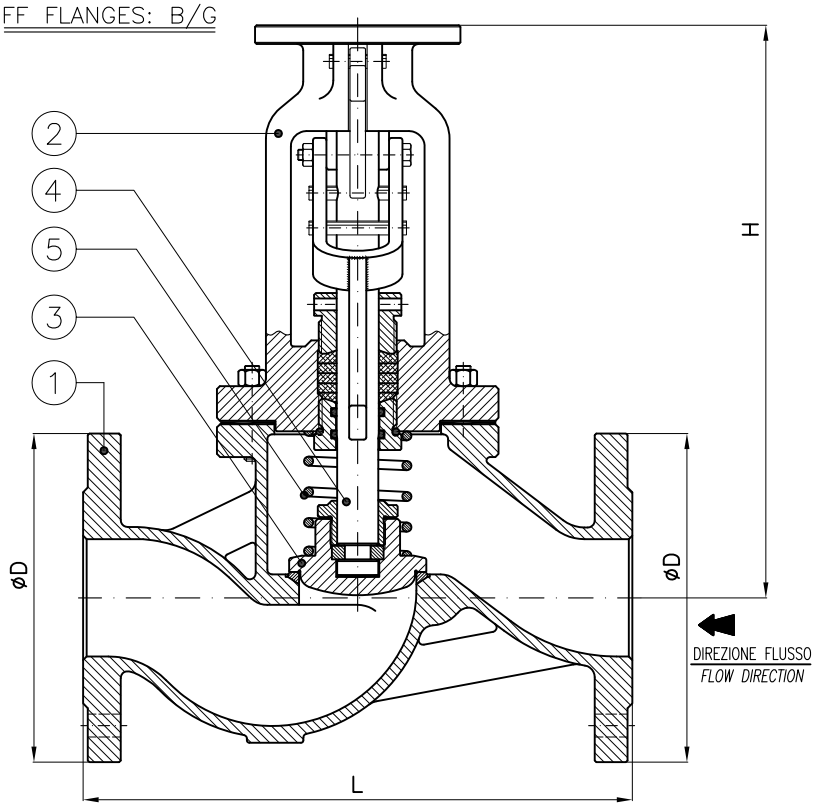

Tab.131.1

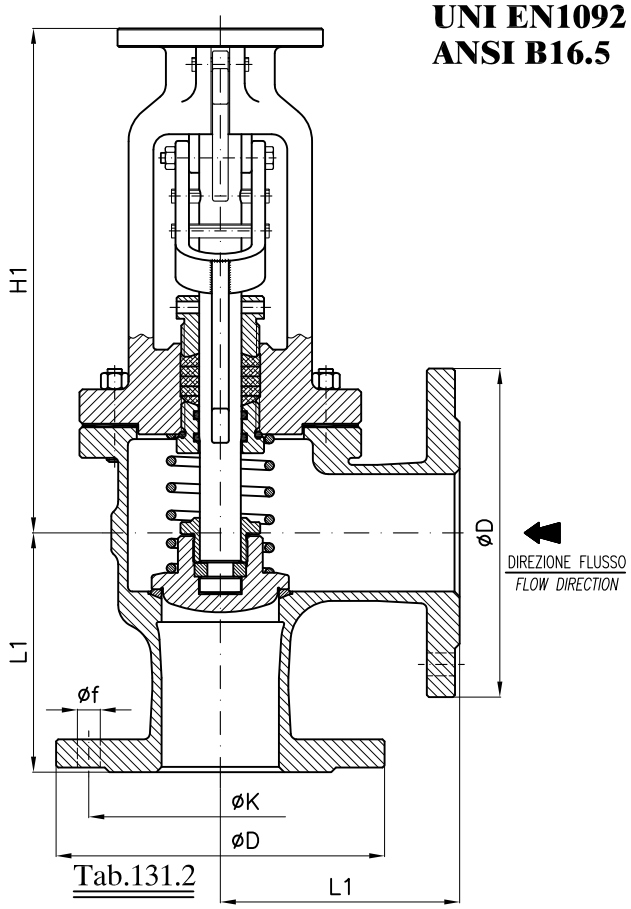

Tab.131.2

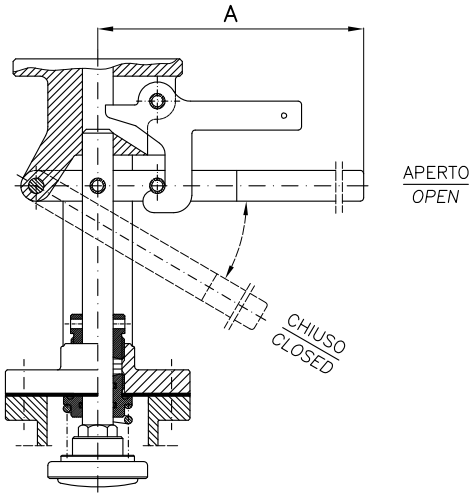

Accessorio a richiesta
Optional accessory

N° 1 finecorsa FD 502 con basetta
NO. 1 Switch FD 502 with base

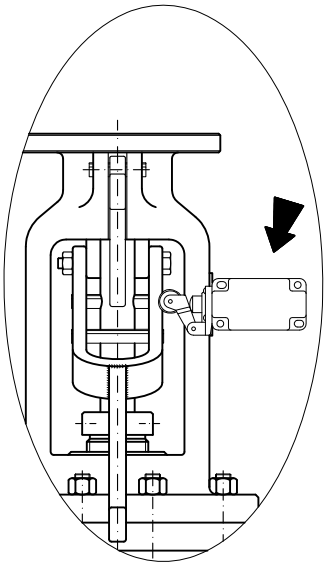

DN	A	H	L	Weight (≅Kg)	H1	L1	Weight (≅Kg)	D PN6	K	f	Holes NO. f	D PN16	K	f	Holes NO. f	D ANSI150	K	f	Holes NO. f
20	325	235	150	7	220	85	8	90	65	11	4	105	75	14	4	98.4	70	16	4
25	325	240	160	9	225	90	9	100	75	11	4	115	85	14	4	108	79	16	4
32	360	295	180	14.5	270	105	15.5	120	90	14	4	140	100	18	4	118	89	16	4
40	360	300	200	15	275	115	16	130	100	14	4	150	110	18	4	127	98	16	4
50	360	305	230	16.5	275	125	19	140	110	14	4	165	125	18	4	152	121	19	4
65	405	330	290	24.5	295	145	22.5	160	130	14	4	185	145	18	4	178	140	19	4
80	405	365	310	30	325	155	27	190	150	18	4	200	160	18	8	190	152	19	4
100	445	420	350	47	360	175	42.5	210	170	18	4	220	180	18	8	229	191	19	8
125	445	435	400	62	370	200	58	240	200	18	8	250	210	18	8	254	216	22	8
150	445	450	480	78.5	375	225	71	265	225	18	8	285	240	22	8	279	241	22	8
200	455	535	600	137	425	275	123	320	280	18	8	340	295	22	12	343	298	22	8

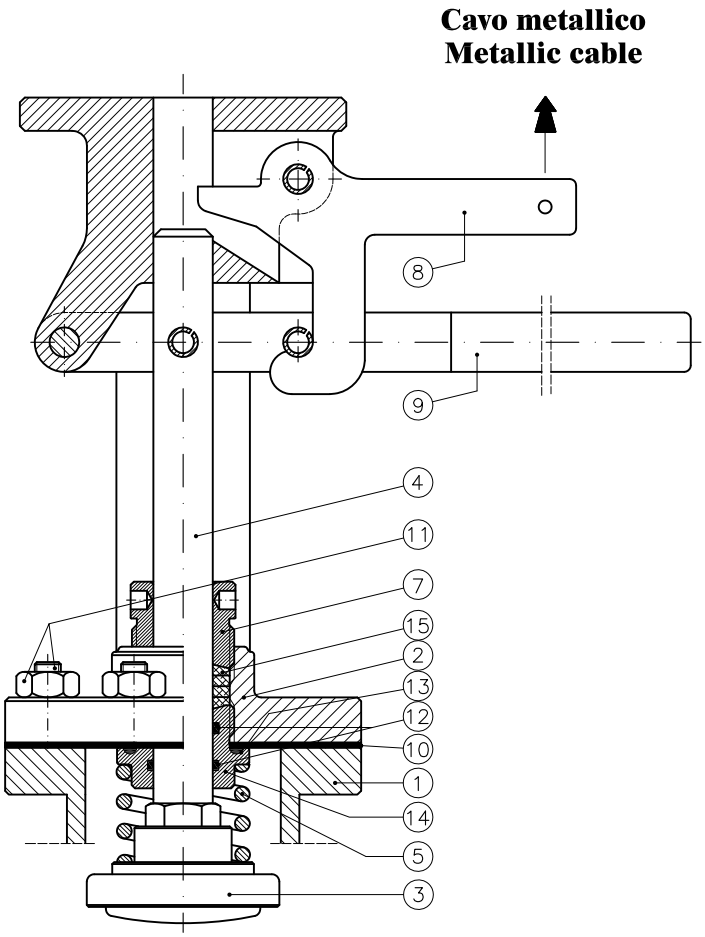

Combinazione materiali standard – Standard materials Combination					
		GS/316	A/316	B/316	G/316
ITEM	DENOMINAZIONE DENOMINATION	MATERIALE MATERIAL	MATERIALE MATERIAL	MATERIALE MATERIAL	MATERIALE MATERIAL
01	Body	Nodular cast iron EN-GJS-400-15U UNI EN1563	Cast steel GP240-GH UNI EN10213	Bronze UNI EN1982 G-CuSn5Zn5Pb5	Cast iron UNI EN1561 EN-GJL-250
02	Bonnet	Nodular cast iron EN-GJS-400-15U UNI EN1563	Nodular cast iron EN-GJS-400-15U UNI EN1563	Bronze UNI EN1982 G-CuSn5Zn5Pb5	Nodular cast iron EN-GJS-400-15U UNI EN1563
03	Disc (≤ DN80)	Stainless steel AISI316 UNI EN10088	Stainless steel AISI316 UNI EN10088	Stainless steel AISI316 UNI EN10088	Stainless steel AISI316 UNI EN10088
03	Disc (≥ DN100)	Cast steel GP240-GH UNI EN10213 plus AISI316 facing welding	Cast steel GP240-GH UNI EN10213 plus AISI316 facing welding	Cast steel GP240-GH UNI EN10213 plus AISI316 facing welding	Cast steel GP240-GH UNI EN10213 plus AISI316 facing welding
04	Stem	Stainless steel AISI316 UNI EN10088	Stainless steel AISI316 UNI EN10088	Stainless steel AISI316 UNI EN10088	Stainless steel AISI316 UNI EN10088
05	Spring	Steel UNI EN10270	Steel UNI EN10270	Steel UNI EN10270	Steel UNI EN10270
07	Stuffing box	Steel UNI EN10025	Steel UNI EN10025	Brass CW617N (OT58)	Steel UNI EN10025
08	Release lever	Steel UNI EN10025	Steel UNI EN10025	Steel UNI EN10025	Steel UNI EN10025
09	Resetting lever	Steel UNI EN10025	Steel UNI EN10025	Steel UNI EN10025	Steel UNI EN10025
10	Gasket	Planiflex KG carbo/C PF81	Planiflex KG carbo/C PF81	Planiflex KG carbo/C PF81	Planiflex KG carbo/C PF81
11	Nuts and bolts	Galvanized Steel 8.8 EN20898-1	Galvanized Steel 8.8 EN20898-1	Galvanized Steel 8.8 EN20898-1	Galvanized Steel 8.8 EN20898-1
12	OR gasket	Viton	Viton	Viton	Viton
13	OR gasket	NBR	NBR	NBR	NBR
14	Gland	AVP Steel UNI EN10277	AVP Steel UNI EN10277	Brass CW617N (OT58)	AVP Steel UNI EN10277
15	Packing	Kevlar graphite KGL	Kevlar graphite KGL	Kevlar graphite KGL	Kevlar graphite KGL

Nota: Combinazioni materiali non standard a richiesta
Note: Non standard materials combinations on request

Valvole a rapida chiusura con telecomando idraulico PN6-PN16-ANSI150
Hydraulic remote control quick closing valves NP6-NP16-ANSI150

Tab.132

RF FLANGES: A/GS
FF FLANGES: B/G

Conform to:
UNI EN1092
ANSI B16.5
NE481343

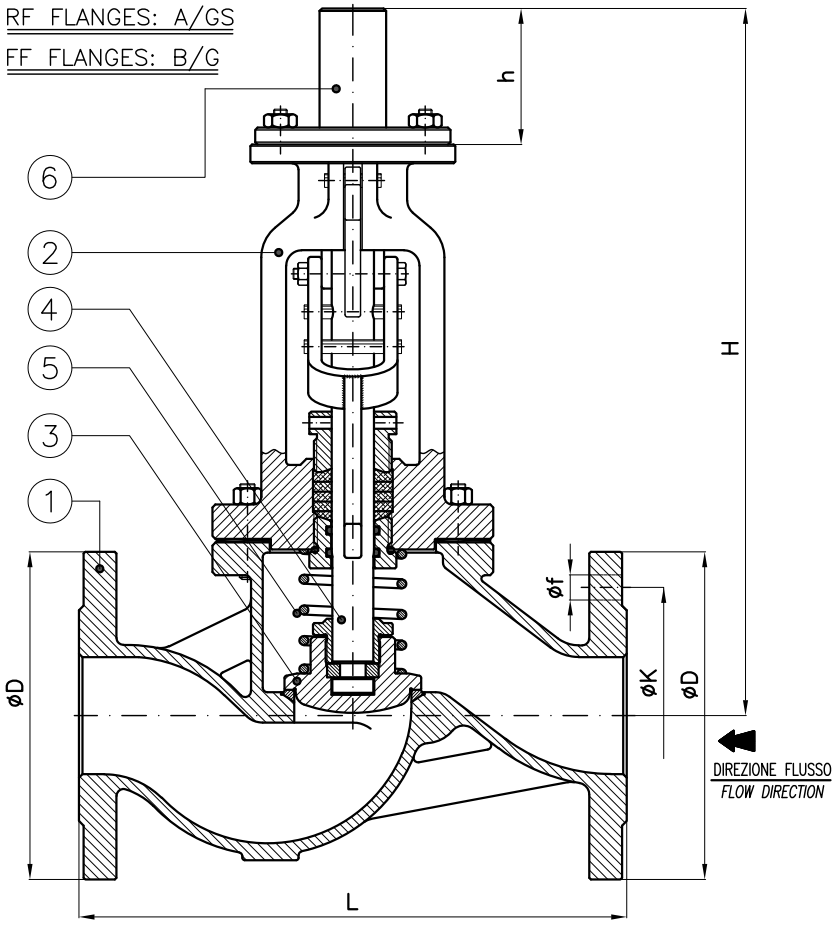

Tab.132.1

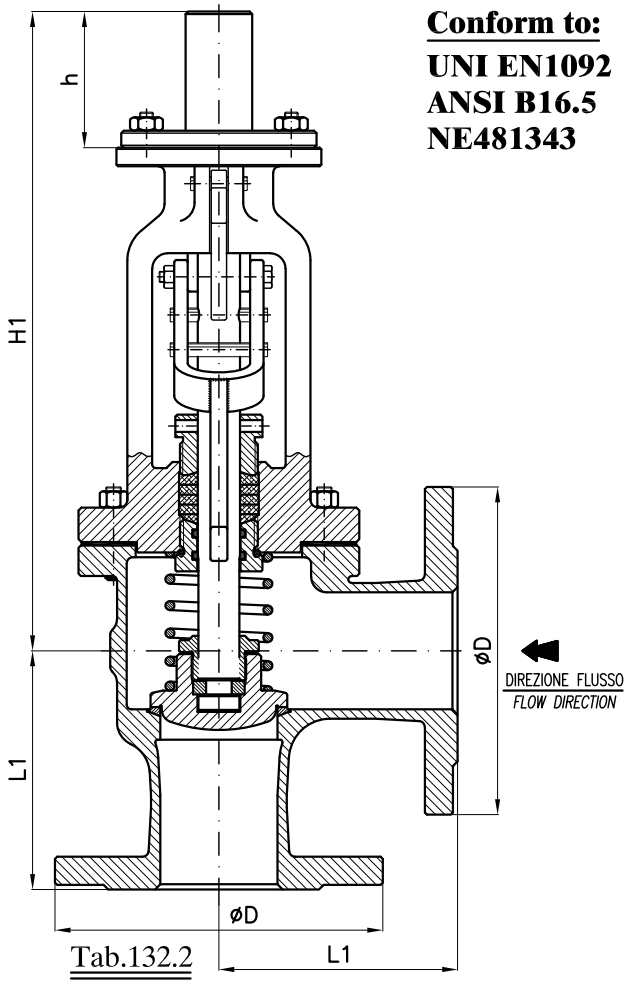

Tab.132.2

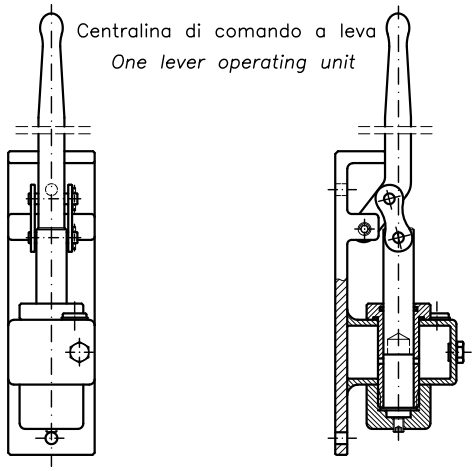

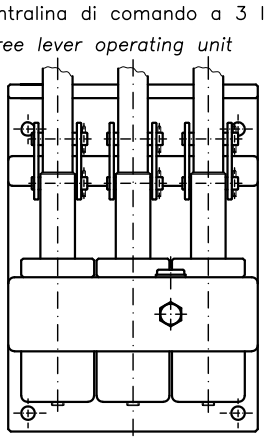

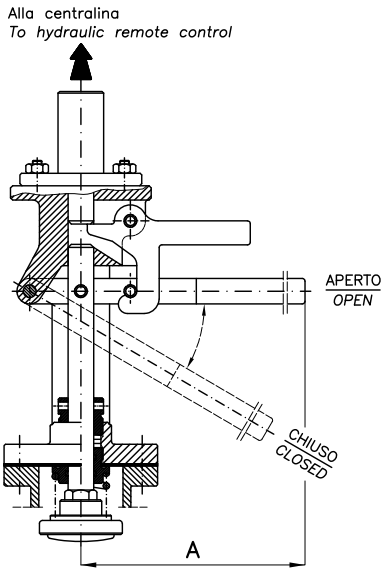

DN	H	L	Weight (≈Kg)	H1	L1	Weight (≈Kg)	A	h	PN6				PN16				ANSI150			
									D	K	f	Holes NO. f	D	K	f	Holes NO. f	D	K	f	Holes NO. f
20	320	150	8	305	85	9	325	81	90	65	11	4	105	75	14	4	98.4	70	16	4
25	325	160	10	310	90	10	325	81	100	75	11	4	115	85	14	4	108	79	16	4
32	385	180	16	355	105	17	360	81	120	90	14	4	140	100	18	4	118	89	16	4
40	385	200	16.5	355	115	17.5	360	81	130	100	14	4	150	110	18	4	127	98	16	4
50	395	230	18	365	125	20.5	360	81	140	110	14	4	165	125	18	4	152	121	19	4
65	415	290	26	410	145	24	405	81	160	130	14	4	185	145	18	4	178	140	19	4
80	455	310	31	415	155	28	405	81	190	150	18	4	200	160	18	8	190	152	19	4
100	505	350	48	445	175	44	445	81	210	170	18	4	220	180	18	8	229	191	19	8
125	525	400	63	455	200	59	445	81	240	200	18	8	250	210	18	8	254	216	22	8
150	545	480	80	465	225	72	445	81	265	225	18	8	285	240	22	8	279	241	22	8
200	615	600	138	505	275	124	460	81	320	280	18	8	340	295	22	12	343	298	22	8

Valvole a rapida chiusura con telecomando idraulico PN6-PN16-ANSI150
Hydraulic remote control quick closing valves NP6-NP16-ANSI150

Tab.132

Connessione alla pompa a mano 1/8" Gas conico
Connection to hand pump (hydraulic remote control) 1/8" Gas BSPT

Istruzioni di montaggio:

1) Montare le valvole osservando il senso del flusso nella valvola.
2) Collegare cilindro idraulico (connessione 1/8" Gas conico) alla pompa a mano Tab.132C con tubi oleodinamici 6x1 oppure 8x1
3) Installare la tubazione con una pendenza costante e raggio di curvatura non inferiore a 50mm.
4) Riempire l'impianto dopo essersi accertati che le tubazioni siano pulite e che le leve di comando siano in posizione aperta.
5) Utilizzare olio idraulico di qualita' per liberare facilmente l'aria contenuta nel circuito.

Instruction of assembling:

1) Assemble the valves following the sense of the flow on the valve
2) Connect hydraulic cylinder (1/8"Gas BSPT connection) to the hand pump Tab.132C with hydraulic pipes 6x1 or 8x1
3) Install the pipe fittings with a costant incline and a radius of curvature no inferior to 50mm.
4) Fill the system after having verified that the pipe fittings are clean and that the control lever are in opening position.
5) Use hydraulic oil of quality for easily release the air contain on the circuit.

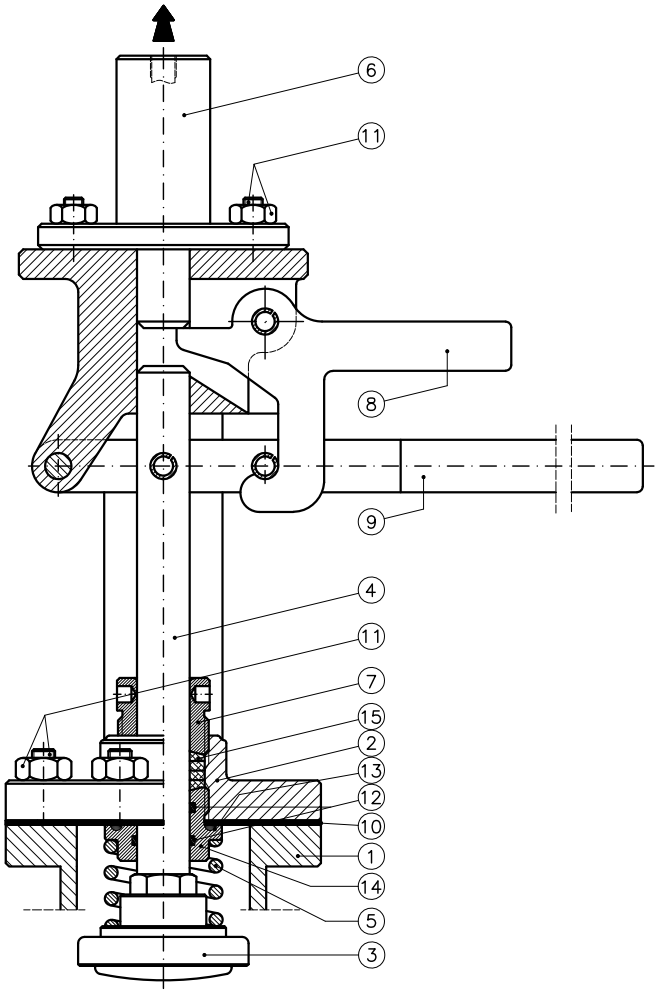

Combinazione materiali standard – Standard materials Combination					
		GS/316	A/316	B/316	G/316
ITEM	DENOMINAZIONE DENOMINATION	MATERIALE MATERIAL	MATERIALE MATERIAL	MATERIALE MATERIAL	MATERIALE MATERIAL
01	Body	Nodular cast iron EN-GJS-400-15U UNI EN1563	Cast steel GP240-GH UNI EN10213	Bronze UNI EN1982 G-CuSn5Zn5Pb5	Cast iron UNI EN1561 EN-GJL-250
02	Bonnet	Nodular cast iron EN-GJS-400-15U UNI EN1563	Nodular cast iron EN-GJS-400-15U UNI EN1563	Bronze UNI EN1982 G-CuSn5Zn5Pb5	Nodular cast iron EN-GJS-400-15U UNI EN1563
03	Disc (≤ DN80)	Stainless steel AISI316 UNI EN10088	Stainless steel AISI316 UNI EN10088	Stainless steel AISI316 UNI EN10088	Stainless steel AISI316 UNI EN10088
03	Disc (≥ DN100)	Cast steel GP240-GH UNI EN10213 plus AISI316 facing welding	Cast steel GP240-GH UNI EN10213 plus AISI316 facing welding	Cast steel GP240-GH UNI EN10213 plus AISI316 facing welding	Cast steel GP240-GH UNI EN10213 plus AISI316 facing welding
04	Stem	Stainless steel AISI316 UNI EN10088	Stainless steel AISI316 UNI EN10088	Stainless steel AISI316 UNI EN10088	Stainless steel AISI316 UNI EN10088
05	Spring	Steel UNI EN10270	Steel UNI EN10270	Steel UNI EN10270	Steel UNI EN10270
06	Hydraulic cylinder	Carbon steel	Carbon steel	Carbon steel	Carbon steel
07	Stuffing box	Steel UNI EN10025	Steel UNI EN10025	Brass CW617N (OT58)	Steel UNI EN10025
08	Release lever	Steel UNI EN10025	Steel UNI EN10025	Steel UNI EN10025	Steel UNI EN10025
09	Resetting lever	Steel UNI EN10025	Steel UNI EN10025	Steel UNI EN10025	Steel UNI EN10025
10	Gasket	Planiflex KG carbo/C PF81	Planiflex KG carbo/C PF81	Planiflex KG carbo/C PF81	Planiflex KG carbo/C PF81
11	Nuts and bolts	Galvanized Steel 8.8 EN20898-1	Galvanized Steel 8.8 EN20898-1	Galvanized Steel 8.8 EN20898-1	Galvanized Steel 8.8 EN20898-1
12	OR gasket	Viton	Viton	Viton	Viton
13	OR gasket	NBR	NBR	NBR	NBR
14	Gland	AVP Steel UNI EN10277	AVP Steel UNI EN10277	Brass CW617N (OT58)	AVP Steel UNI EN10277
15	Packing	Kevlar graphite KGL	Kevlar graphite KGL	Kevlar graphite KGL	Kevlar graphite KGL
Nota: Combinazioni materiali non standard a richiesta Note: Non standard materials combinations on request					

Accessorio a richiesta
Optional accessory

Finecorsa - Switch

N° 1 Finecorsa FD 502 con basetta
N° 1 Limit switch FD 502 with base

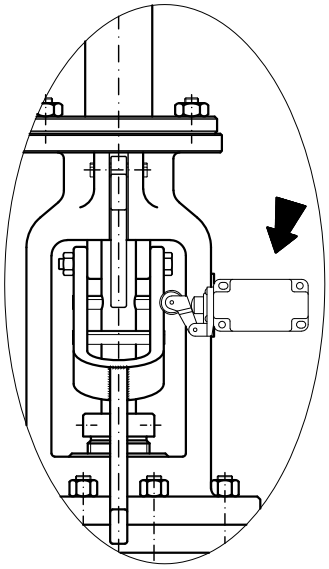

Cilindro idraulico standard
Standard hydraulic cylinder

(Per comando da unica postazione)
(For control from a single workstation)

H.102/0005/BS (ND15 to 25)
H.102/0005S (ND32 to 200)

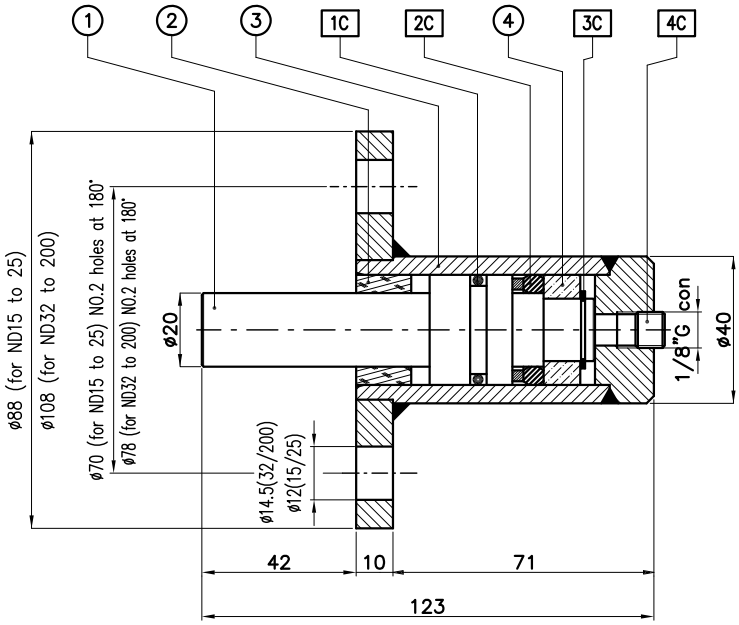

POS	CODICE/CODE	DESCRIZIONE	DESCRIPTION	Npm
1	H.102.0-03	ASTA-PISTONE X H.102/....	ROD	1
2	H.102.0-04	ANELLO GUIDA IN NYLON 30X20X15	GUIDE RING	1
3	H.102.1	ASS.SALD.CILINDRO	HOUSING WELDED ASSEMBLY	1
4	H.102.0-02	RONDELLA IN OTTONE	SPACER	1

POS	CODICE/CODE	DESCRIZIONE	DESCRIPTION	Npm
1C	CG.OR 3.02340	GUARNIZ. OR 4093/213	O-RING	1
2C	CG.B 118078	GUARNIZ. BALSELE 30X20X8.5	ROD SEAL	1
3C	C.3653.017	ANELLO SEEGER E 17	EXT.CIRCLIP	1
4C	C.DIN906 1/8G	TAPPO 1/8 GAS CONICO	HEX.SOCKET PIPE PLUG	1

Cilindro idraulico a doppio comando
Double control hydraulic cylinder

(Per comando da doppia postazione,collegamento a pompa postazione A e collegamento a pompa postazione B)
(For control from a double workstation, Connect to the pump the workstation A and connect to the pump the workstation B)

H.102/0005/D (ND32 to 200)

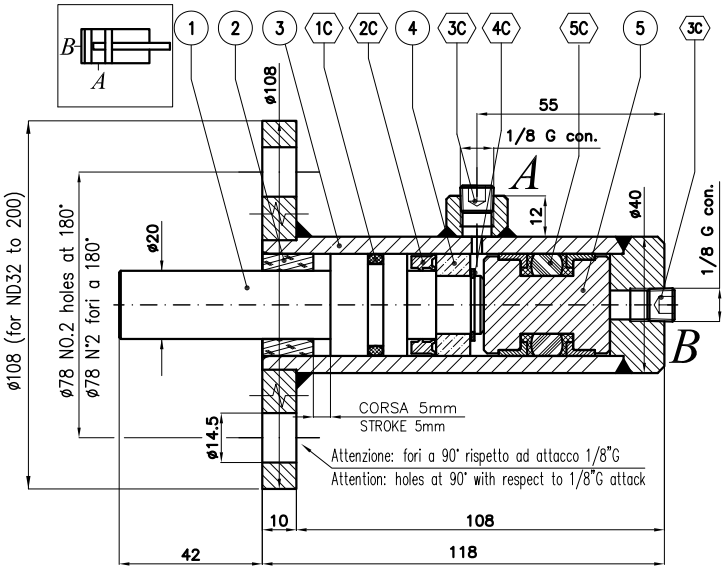

POS	CODICE/CODE	DESCRIZIONE	DESCRIPTION	Npm
1	H.102.0-03	ASTA-PISTONE X H.102/....	ROD	1
2	H.102.0-04	ANELLO GUIDA IN NYLON 30X20X15	GUIDE RING	1
3	H.102.1-00/D	ASS.SALD.CILINDRO X H.102/0005/D	HOUSING WELDED ASSEMBLY	1
4	H.102.0-02	RONDELLA IN OTTONE	SPACER	1
5	H.102.0-01	PISTONE FLOTTANTE D30X37	FREE PISTON	1

POS	CODICE/CODE	DESCRIZIONE	DESCRIPTION	Npm
1C	CG.OR 3.02340	GUARNIZ. OR 4093/213	O-RING	1
2C	CG.TS20308/L	GUARN.ASTA POLIUR. D30XD20X7.2	ROD SEAL	1
3C	C.DIN906 1/8G	TAPPO 1/8 GAS CONICO	HEX.SOCKET PIPE PLUG	2
4C	C.3653.017	ANELLO SEEGER E 17	EXT.CIRCLIP	1
5C	CG.DBM118066	GUARNIZ. BALMASTER D30	'DBM' PACKING	1

Pompe a mano per valvole a rapida chiusura

Hand pumps for quick closing valves

Tab.132C

3 LEVE / 3 LEVERS 2 LEVE / 2 LEVERS 1 LEVA / 1 LEVER

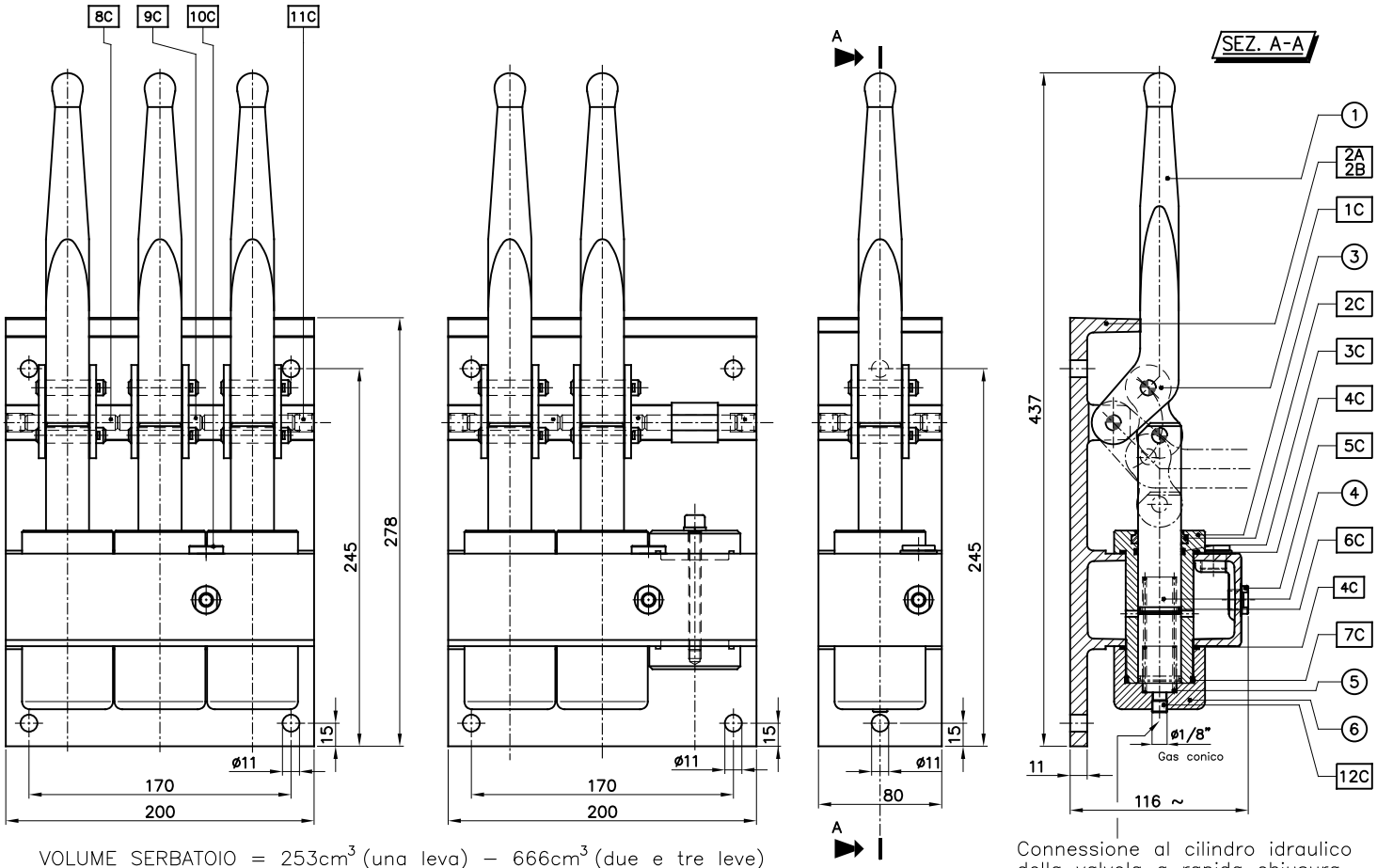

Connessione al cilindro idraulico della valvola a rapida chiusura

Connection to hydraulic cylinder of quick closing valve

VOLUME SERBATOIO = 253cm^3 (una leva) – 666cm^3 (due e tre leve)

CILINDRATA UTILE PER LEVA = 24cm^3

TANK VOLUME = 253cm^3 (one lever) – 666cm^3 (two and three levers)

USEFUL DISPLACEMENT = 24cm^3

La pompa manuale deve essere posizionata ad un livello superiore alla valvola Tab.132 Nei casi in cui fosse posizionata ad un livello inferiore e' necessario prevedere l'installazione di un serbatoio di compenso Tab.132 Serb

The hand pump must be positioned at a higher level than the valve Tab.132 in cases where it is positioned at a lower level it is necessary to provide for the installation of a compensating tank Tab132 Serb

Type	Code	Weight (Kg)
1 Lever	W.855	3.6
2 Levers	W.856	8
3 Levers	W.857	9.8

POS	CODICE/CODE	DESCRIZIONE	DESCRIPTION	Npm	NOTE
1	W.855.0-04	LEVA	HAND LEVER	3	ALUMINIUM 46400
2A	W.855.0-10	CORPO POMPA A 1 LEVA LAVORATO	1 LEVER PUMP SERVOIR	1	ALUMINIUM 46400
2B	W.857.0-10	CORPO POMPA A 3 LEVE LAVORATO	3 LEVER PUMP SERVOIR	1	ALUMINIUM 46400
3	W.855.0-02	BOCCOLA Di 28	BUSHING	3	CAST IRON GG26
4	W.855.0-01	POMPANTE D28	PISTON	3	STEEL UNI C 40
5	W.855.0-05	MOLLA	SPRING	3	STEEL 48Si7
6	W.855.0-03	GHIERA INFERIORE	LOWER METAL RING	3	STEEL 11SMnPb37

POS	CODICE/CODE	DESCRIZIONE	DESCRIPTION	Npm	NOTE
1C	C.C1.25"SG	GIUNTO X CATENA SEMPLICE 1'1/4	SIMPLE CHAIN COUPLING 1 1/4"	3	STEEL
2C	CG.WRM 110141	ANELLO RASCHIATORE D28	WIPER RING	3	POLYURETHANE SEAL
3C	CG.OR 2.02825	GUARNIZ. OR 3112/122	O-RING	3	Buna N 70 SHORE
4C	CG.OR 2.04569	GUARNIZ. OR 3181/133	O-RING	6	Buna N 70 SHORE
5C	C.HFE9	INDICATORE DI LIVELLO HFTX.9	RESERVOIR LEVEL GAUGE	1	PLASTIC
6C	CG.BR 1.02512	ANELLO ANTIESTR. BR 2100/022	ANTI-EXTRUSION RING	3	Buna N 90 SHORE
7C	CG.OR 2.04095	GUARNIZ. OR 3162/130	O-RING	3	Buna N 70 SHORE
8C	C.1707.10X060	SPINA CILINDRICA D10X60	CYL.PIN	2	STEEL UNI C 72
9C	C.1707.10X055	SPINA CILINDRICA D10X55	CYL.PIN	1	STEEL UNI C 72
10C	C.DIN908G3/8G	TAPPO C/GUARNIZIONE 3/8GAS CIL	PLUG WITH SEAL	1	STEEL
11C	C.5923.12X012	VITE S.T.E.I. M12X12	HEX.SOCKET SET SCREW M12X12	2	STEEL
12C	C.DIN906 1/8G	TAPPO 1/8 GAS CONICO	HEX.SOCKET PIPE PLUG	3	STEEL

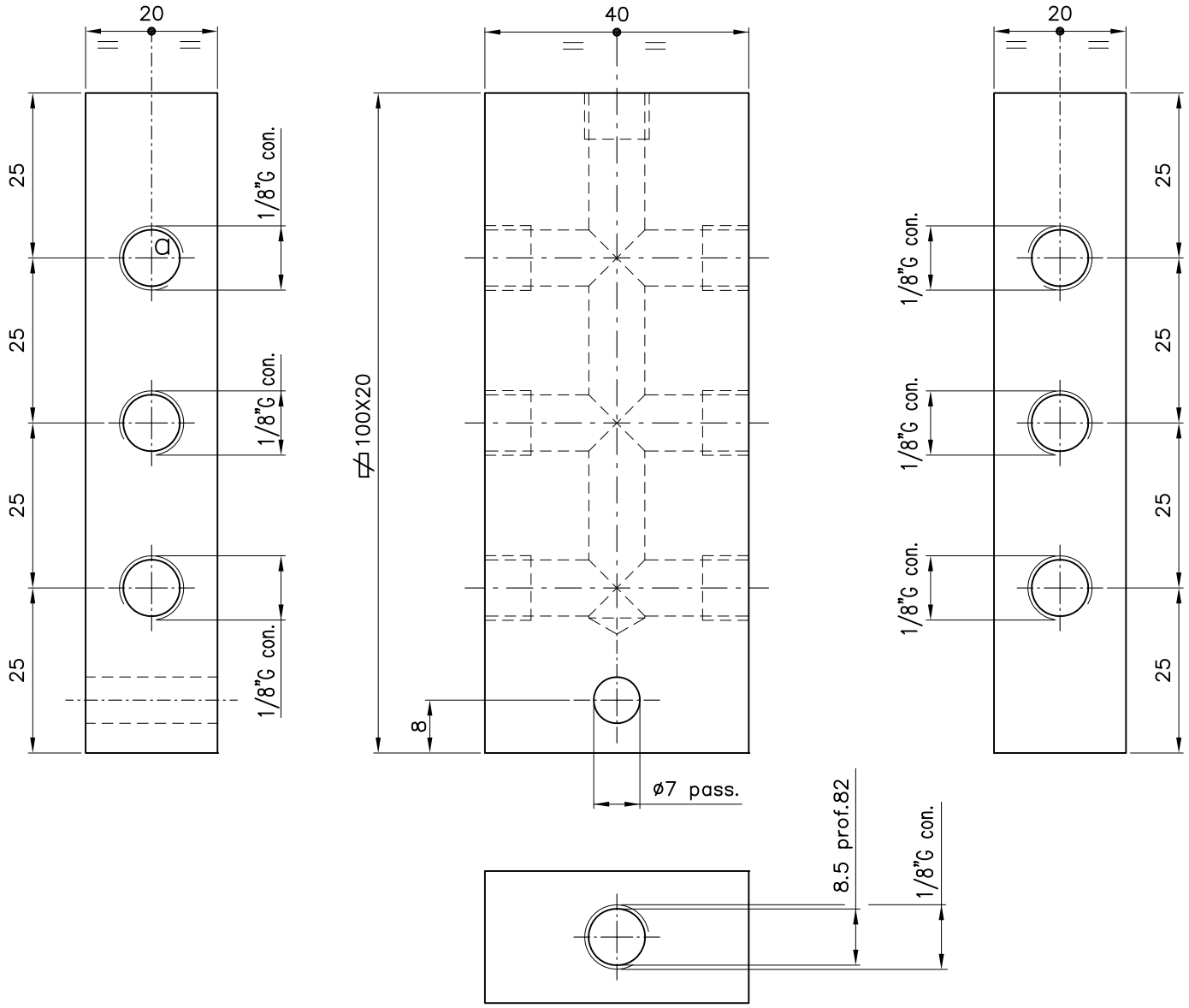

W.855.9-00

Blocchetto di distribuzione per max 6 connesioni.
Utilizzata per la chiusura contemporanea di più valvole fino ad un max di 6.
Si fornisce su richiesta.

Distribution block for max 6 connections.
Used for the simultaneos closure of more valves up to a max of 6.
It is available upon request.

POS	CODICE	Npm	COD. MATERIALE	DESCR.MATER.	DIMENSIONI	KG	NOTE
	W.855.9-01	1	41.5ES040X020	AC-11 ESTRUSO	PIATTO 40X20X102	0.22	
a	C.DIN906 1/8G	6		TAPPO DIN906	1/8" G CON.		

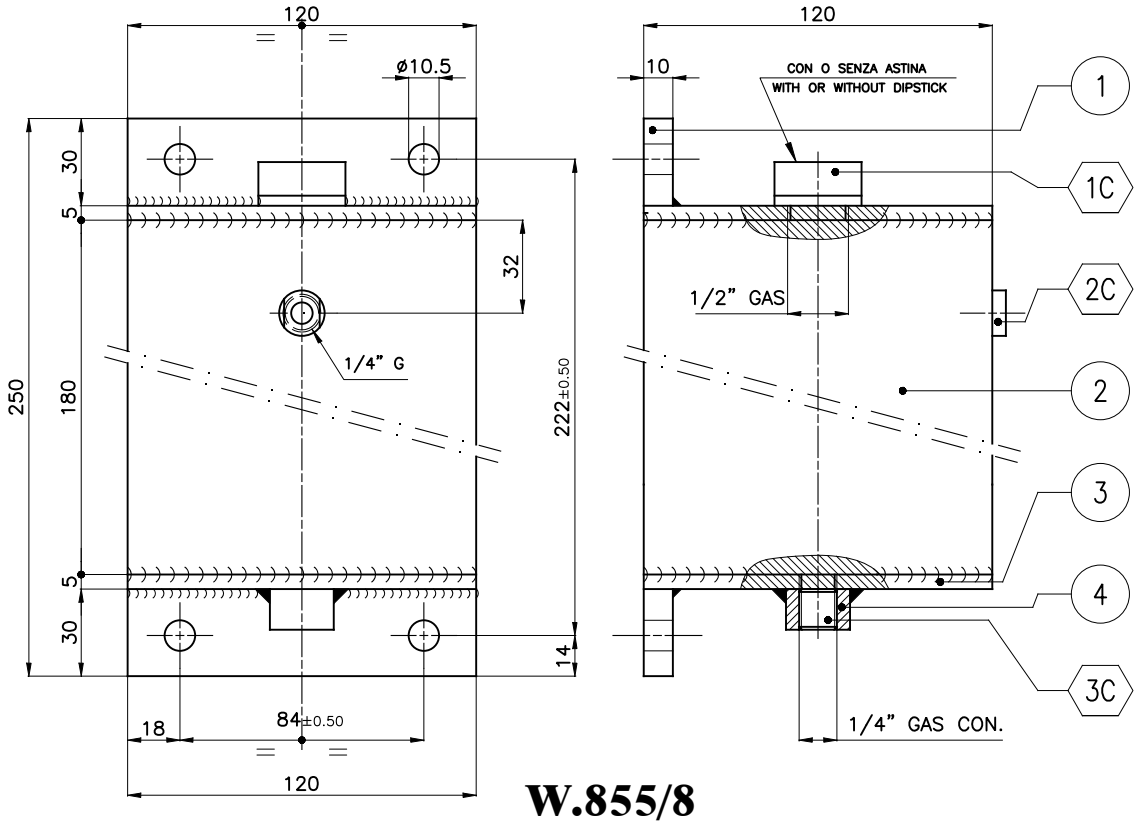

W.855/8

POS	CODICE/CODE	DESCRIZIONE	DESCRIPTION	Npm	NOTE
	W.855.8-00	ASSIEME SALDATO SERBATOIO 2L.	TANK ASSEMBLY	1	
1C	C.SFN30-1/2-F	TAPPO CON SFIATO	PLUG	1	
2C	C.HFE9	INDICATORE DI LIVELLO HFTX.9	RESERVOIR LEVEL GAUGE	1	
3C	C.DIN906.1/4G	TAPPO 1/4 GAS CONICO	HEX.SOCKET PIPE PLUG	1	

POS	CODICE	Npm	COD. MATERIALE	DESCR.MATER.	DIMENSIONI	KG	NOTE
1	W.855.8-01	2	00.5TR030X010	Fe 37 TRAF.	PIATTO 30X10X120F	0.3	
2	W.855.8-02	1	00.2LA120X125	Fe 37 LAM.	TUB. 120X120X5X180	3.4	
3	W.855.8-03	2	00.5LA120X005	Fe 37 LAM.	PIATTO 120X5X120F	0.5	
4	H.000.0-05	1	/	/	1/4 GAS CON.		

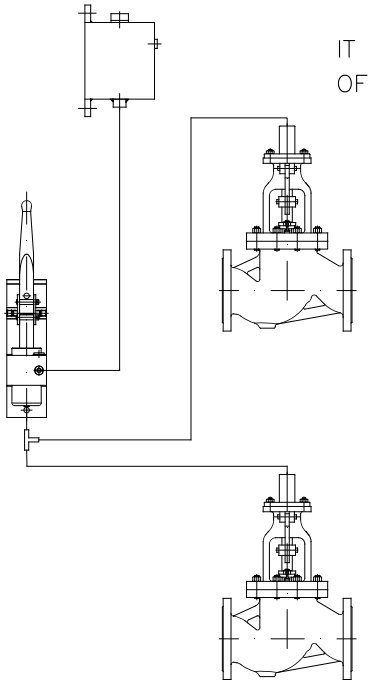

IT IS REQUIRED THE USE
OF COMPENSATING TANK

IT IS NOT REQUIRED THE USE
OF COMPENSATING TANK

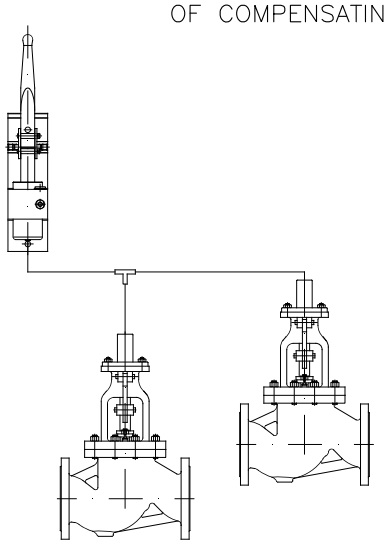

Valvole a rapida chiusura con telecomando pneumatico o idraulico serie IRP PN6-16-ANSI150

Pneumatic or hydraulic remote control quick closing valves IRP type NP6-NP16-ANSI150

Tab.132.1
IRP

RF FLANGES: A/GS

FF FLANGES: B/G

Conform to:
UNI EN1092
DIN 3202
ANSI B16.5

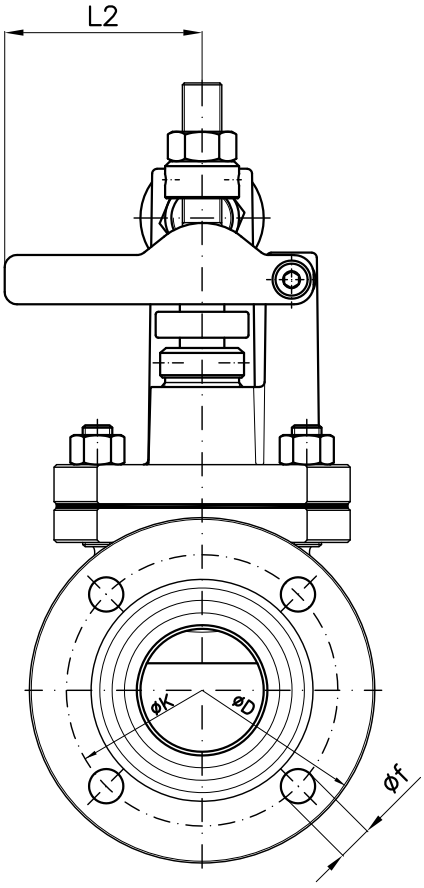

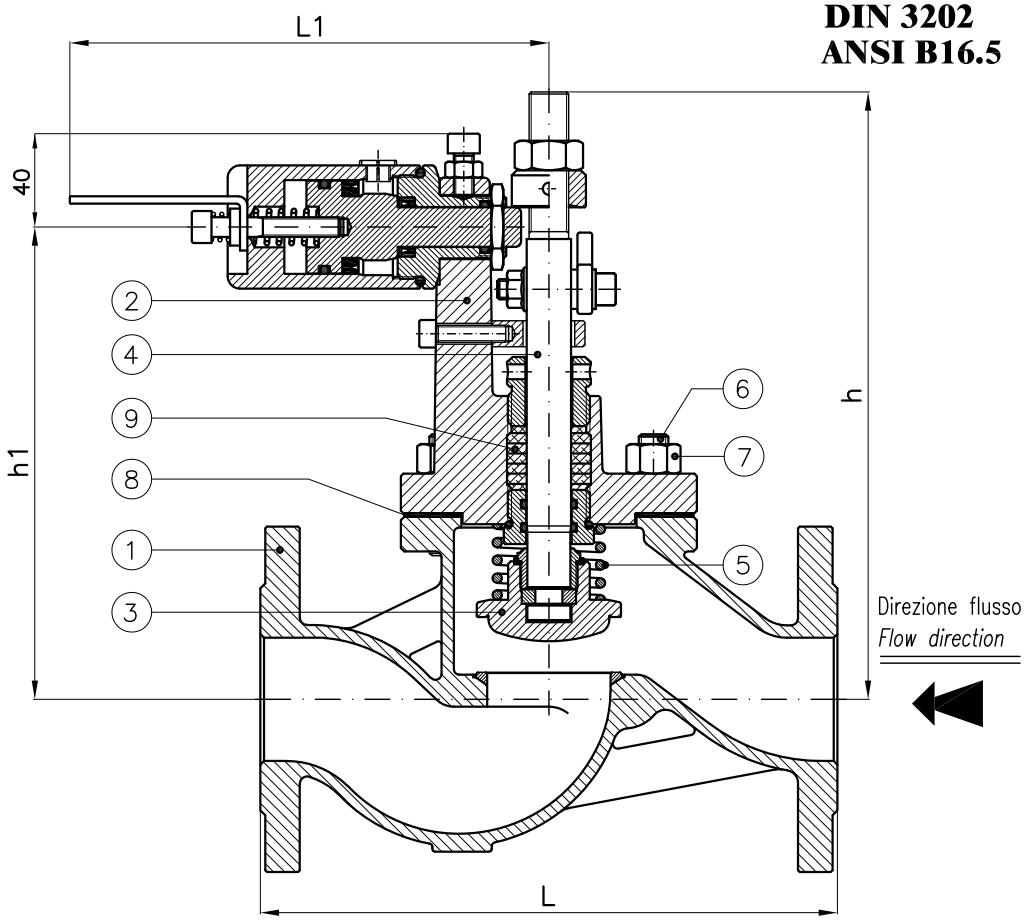

DN								PN6				PN16				ANSI150			
mm	inches	h (Aperta) (Open)	h1	L	L1	L2	Weight (Kg)	D	K	f	Holes NO. f	D	K	f	Holes NO. f	D	K	f	Holes NO. f
20	3/4"	220	175	150	185	80	9	90	65	11	4	105	75	14	4	98.4	70	16	4
25	1"	220	180	160	185	80	10	100	75	11	4	115	85	14	4	108	79	16	4
32	1"1/4	235	190	180	185	80	12	120	90	14	4	140	100	18	4	118	89	16	4
40	1"1/2	240	195	200	185	80	13	130	100	14	4	150	110	18	4	127	98	16	4
50	2"	245	200	230	185	80	16	140	110	14	4	165	125	18	4	152	121	19	4
65	2"1/2	255	210	290	185	80	18	160	130	14	4	185	145	18	4	178	140	19	4

Combinazione materiali standard – Standard materials Combination

		A/316	CF8M/316	B/316	G/316	GS/316
ITEM	DENOMINAZIONE DENOMINATION	MATERIALE MATERIAL	MATERIALE MATERIAL	MATERIALE MATERIAL	MATERIALE MATERIAL	MATERIALE MATERIAL
01	Body	Cast steel GP240-GH UNI EN10213	Stainless steel CF8M ASTM A351	Bronze UNI EN1982 G-CuSn5Zn5Pb5	Cast iron UNI EN1561 EN-GJL-250	Nodular cast iron EN-GJS-400-15U UNI EN1563
02	Bonnet	Nodular cast iron EN-GJS-400-15U UNI EN1563	Stainless steel CF8M ASTM A351	Bronze UNI EN1982 G-CuSn5Zn5Pb5	Nodular cast iron EN-GJS-400-15U UNI EN1563	Nodular cast iron EN-GJS-400-15U UNI EN1563
03	Disc	Stainless steel AISI316 UNI EN10088	Stainless steel AISI316 UNI EN10088	Stainless steel AISI316 UNI EN10088	Stainless steel AISI316 UNI EN10088	Stainless steel AISI316 UNI EN10088
04	Stem	Stainless steel AISI316 UNI EN10088	Stainless steel AISI316 UNI EN10088	Stainless steel AISI316 UNI EN10088	Stainless steel AISI316 UNI EN10088	Stainless steel AISI316 UNI EN10088
05	Spring	Steel UNI EN10270	Stainless steel UNI EN10151	Steel UNI EN10270	Steel UNI EN10270	Steel UNI EN10270
06	Bonnet stud bolt	Galvanized Steel 8.8 EN20898-1	Stainless steel B8M	Galvanized Steel 8.8 EN20898-1	Galvanized Steel 8.8 EN20898-1	Galvanized Steel 8.8 EN20898-1
07	Nut	Galvanized Steel 8.8 EN20898-1	Stainless steel Gr.8M	Galvanized Steel 8.8 EN20898-1	Galvanized Steel 8.8 EN20898-1	Galvanized Steel 8.8 EN20898-1
08	Gasket	Planiflex KG carbo/C PF81	Planiflex KG carbo/C PF81	Planiflex KG carbo/C PF81	Planiflex KG carbo/C PF81	Planiflex KG carbo/C PF81
09	Packing	Kevlar graphite KGL	Kevlar graphite KGL	Kevlar graphite KGL	Kevlar graphite KGL	Kevlar graphite KGL

Nota: Combinazioni materiali non standard a richiesta
Note: Non standard materials combinations on request

RF FLANGES: A/GS
FF FLANGES: B/G

Conform to:
UNI EN1092
ANSI B16.5

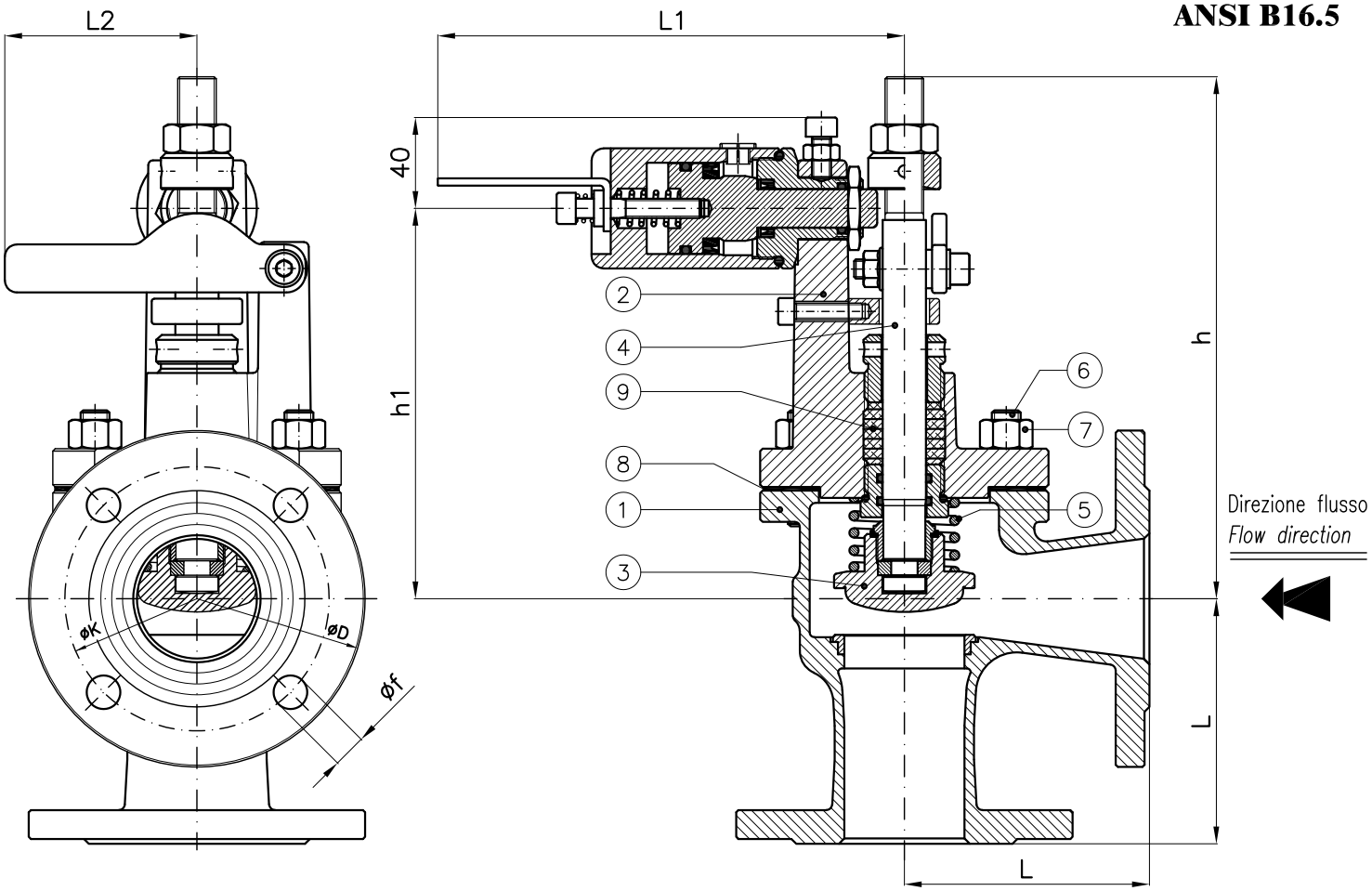

DN							PN6					PN16					ANSI150				
mm	inches	h (Aperta) (Open)	h1	L1	L2	Weight (Kg)	L	D	K	f	Holes NO. f	L	D	K	f	Holes NO. f	L	D	K	f	Holes NO. f
20	3/4"	190	160	185	80	9	85	90	65	11	4	85	105	75	14	4	85	98.4	70	16	4
25	1"	200	165	185	80	10	90	100	75	11	4	90	115	85	14	4	90	108	79	16	4
32	1"1/4	200	165	185	80	12	105	120	90	14	4	105	140	100	18	4	105	118	89	16	4
40	1"1/2	205	175	185	80	13	95	130	100	14	4	115	150	110	18	4	115	127	98	16	4
50	2"	210	175	185	80	16	100	140	110	14	4	125	165	125	18	4	125	152	121	19	4

Combinazione materiali standard – Standard materials Combination						
		A/316	CF8M/316	B/316	G/316	GS/316
ITEM	DENOMINAZIONE DENOMINATION	MATERIALE MATERIAL	MATERIALE MATERIAL	MATERIALE MATERIAL	MATERIALE MATERIAL	MATERIALE MATERIAL
01	Body	Cast steel GP240-GH UNI EN10213	Stainless steel CF8M ASTM A351	Bronze UNI EN1982 G-CuSn5Zn5Pb5	Cast iron UNI EN1561 EN-GJL-250	Nodular cast iron EN-GJS-400-15U UNI EN1563
02	Bonnet	Nodular cast iron EN-GJS-400-15U UNI EN1563	Stainless steel CF8M ASTM A351	Bronze UNI EN1982 G-CuSn5Zn5Pb5	Nodular cast iron EN-GJS-400-15U UNI EN1563	Nodular cast iron EN-GJS-400-15U UNI EN1563
03	Disc	Stainless steel AISI316 UNI EN10088	Stainless steel AISI316 UNI EN10088	Stainless steel AISI316 UNI EN10088	Stainless steel AISI316 UNI EN10088	Stainless steel AISI316 UNI EN10088
04	Stem	Stainless steel AISI316 UNI EN10088	Stainless steel AISI316 UNI EN10088	Stainless steel AISI316 UNI EN10088	Stainless steel AISI316 UNI EN10088	Stainless steel AISI316 UNI EN10088
05	Spring	Steel UNI EN10270	Stainless steel UNI EN10151	Steel UNI EN10270	Steel UNI EN10270	Steel UNI EN10270
06	Bonnet stud bolt	Galvanized Steel 8.8 EN20898-1	Stainless steel B8M	Galvanized Steel 8.8 EN20898-1	Galvanized Steel 8.8 EN20898-1	Galvanized Steel 8.8 EN20898-1
07	Nut	Galvanized Steel 8.8 EN20898-1	Stainless steel Gr.8M	Galvanized Steel 8.8 EN20898-1	Galvanized Steel 8.8 EN20898-1	Galvanized Steel 8.8 EN20898-1
08	Gasket	Planiflex KG carbo/C PF81	Planiflex KG carbo/C PF81	Planiflex KG carbo/C PF81	Planiflex KG carbo/C PF81	Planiflex KG carbo/C PF81
09	Packing	Kevlar graphite KGL	Kevlar graphite KGL	Kevlar graphite KGL	Kevlar graphite KGL	Kevlar graphite KGL

Nota: Combinazioni materiali non standard a richiesta
Note: Non standard materials combinations on request

Valvole a rapida chiusura con telecomando pneumatico serie IRP PN6-PN16
Pneumatic remote control quick closing valves IRP type NP6-NP16

Tab.132 IRP-PN

Conform to:
UNI EN1092
DIN 3202

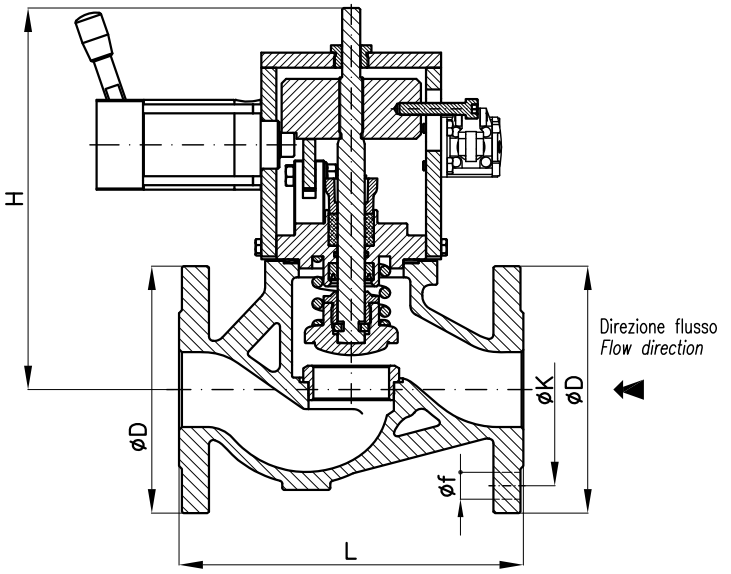

Tab. 132.1 IRP-PN

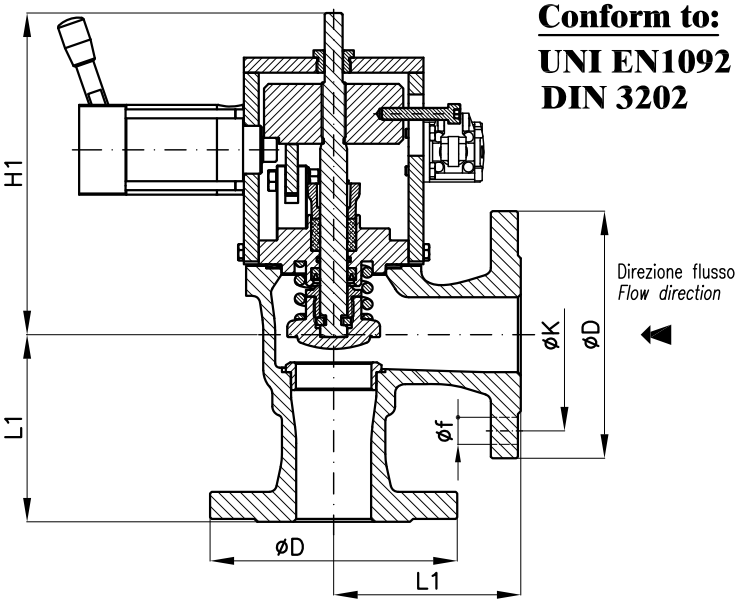

Tab. 132.2 IRP-PN

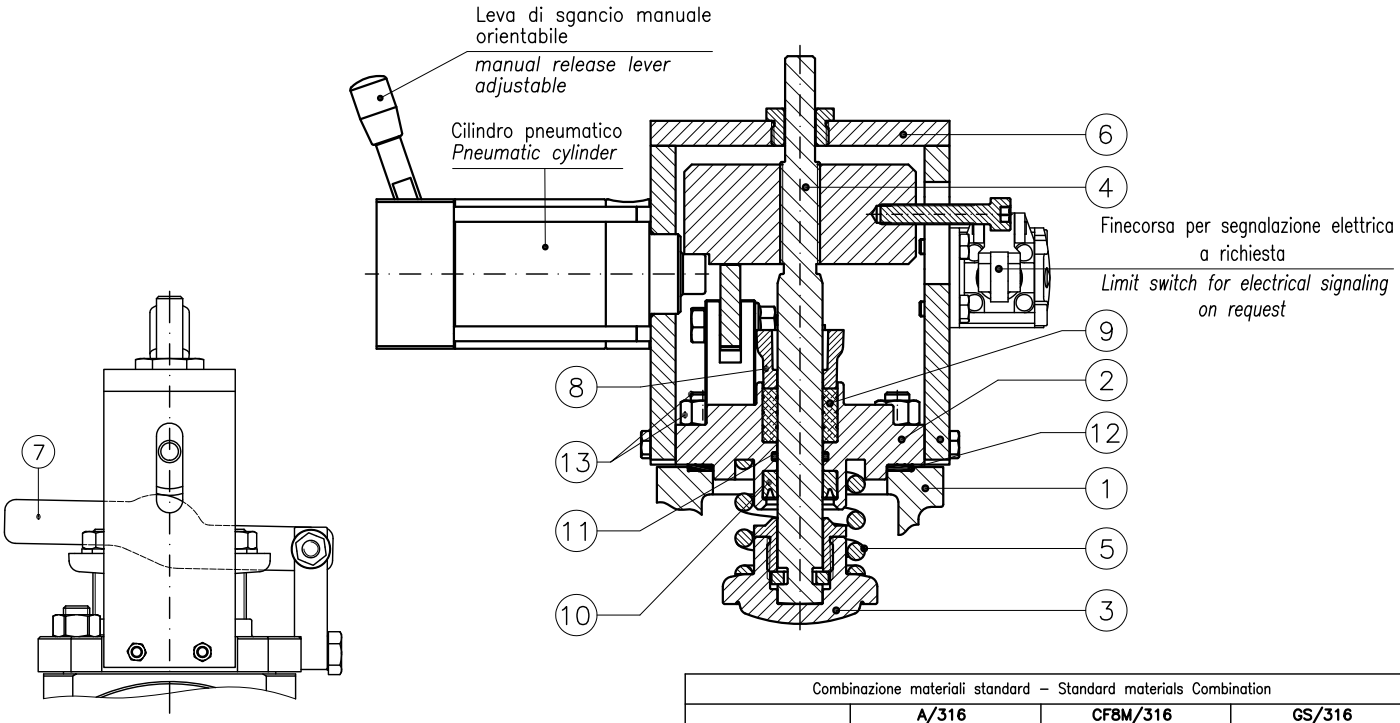

N.B.: Prolunga per leva di riarmo (da inserire su leva 7) fissata al coperchio e in dotazione ad ogni valvola

N.B.: Extension for release lever (insert on lever 7) fixed to the bonnet and supplied with each valve

					PN6				PN16			
DN	H (Aperta) (Open) (~)	L	H1 (Aperta) (Open) (~)	L1	D	K	f	Holes NO. f	D	K	f	Holes NO. f
20	205	150	185	85	90	65	11	4	105	75	14	4
25	210	160	190	90	100	75	11	4	115	85	14	4
32	240	180	215	105	120	90	14	4	140	100	18	4
40	250	200	245	115	130	100	14	4	150	110	18	4
50	260	230	220	125	140	110	14	4	165	125	18	4
65	285	290	250	145	160	130	14	4	185	145	18	4
80	310	310	270	155	190	150	18	4	200	160	18	8
100	345	350	285	175	210	170	18	4	220	180	18	8
125	365	400	300	200	240	200	18	8	250	210	18	8
150	385	480	335	225	265	225	18	8	285	240	22	8
200	535	600	425	275	320	280	18	8	340	295	22	12

Combinazione materiali standard – Standard materials Combination

		A/316	CF8M/316	GS/316
ITEM	DENOMINAZIONE DENOMINATION	MATERIALE MATERIAL	MATERIALE MATERIAL	MATERIALE MATERIAL
01	Body	Cast steel GP240-GH UNI EN10213	Stainless steel CF8M ASTM A351	Nodular cast iron EN-GJS-400-15U UNI EN1563
02	Bonnet	Carbon Steel UNI EN10025	Stainless steel AISI316 UNI EN10088	Carbon Steel UNI EN10025
03	Disc (≤ DN80)	Stainless steel AISI316 UNI EN10088	Stainless steel AISI316 UNI EN10088	Stainless steel AISI316 UNI EN10088
03	Disc (≥ DN100)	Cast steel GP240-GH UNI EN10213 Plus AISI316 facing welding	Stainless steel CF8M ASTM A351	Cast steel GP240-GH UNI EN10213 Plus AISI316 facing welding
04	Stem	Stainless steel AISI316 UNI EN10088	Stainless steel AISI316 UNI EN10088	Stainless steel AISI316 UNI EN10088
05	Spring	Steel UNI EN10270	Stainless steel AISI316 UNI EN10151	Steel UNI EN10270
06	Bracket	Steel UNI EN10025	Steel UNI EN10025	Steel UNI EN10025
07	Release lever	Steel UNI EN10025	Steel UNI EN10025	Steel UNI EN10025
08	Gland bushing	Brass CW509L (OT60)	Brass CW509L (OT60)	Brass CW509L (OT60)
09	Packing	Kevlar graphite KGL	Kevlar graphite KGL	Kevlar graphite KGL
10	Seal ring	NBR	NBR	NBR
11	OR Gasket	Viton	Viton	Viton
12	Gasket	Planiflex KG carbo/C PF81	Planiflex KG carbo/C PF81	Planiflex KG carbo/C PF81
13	Nuts and Bolts	Galvanized Steel 8.8 EN20898-1	Stainless steel B8M/Gr.8M	Galvanized Steel 8.8 EN20898-1

Nota: Combinazioni materiali non standard a richiesta
Note: Non standard materials combinations on request

Cilindro pneumatico
Pneumatic cylinder
H.109/TB10

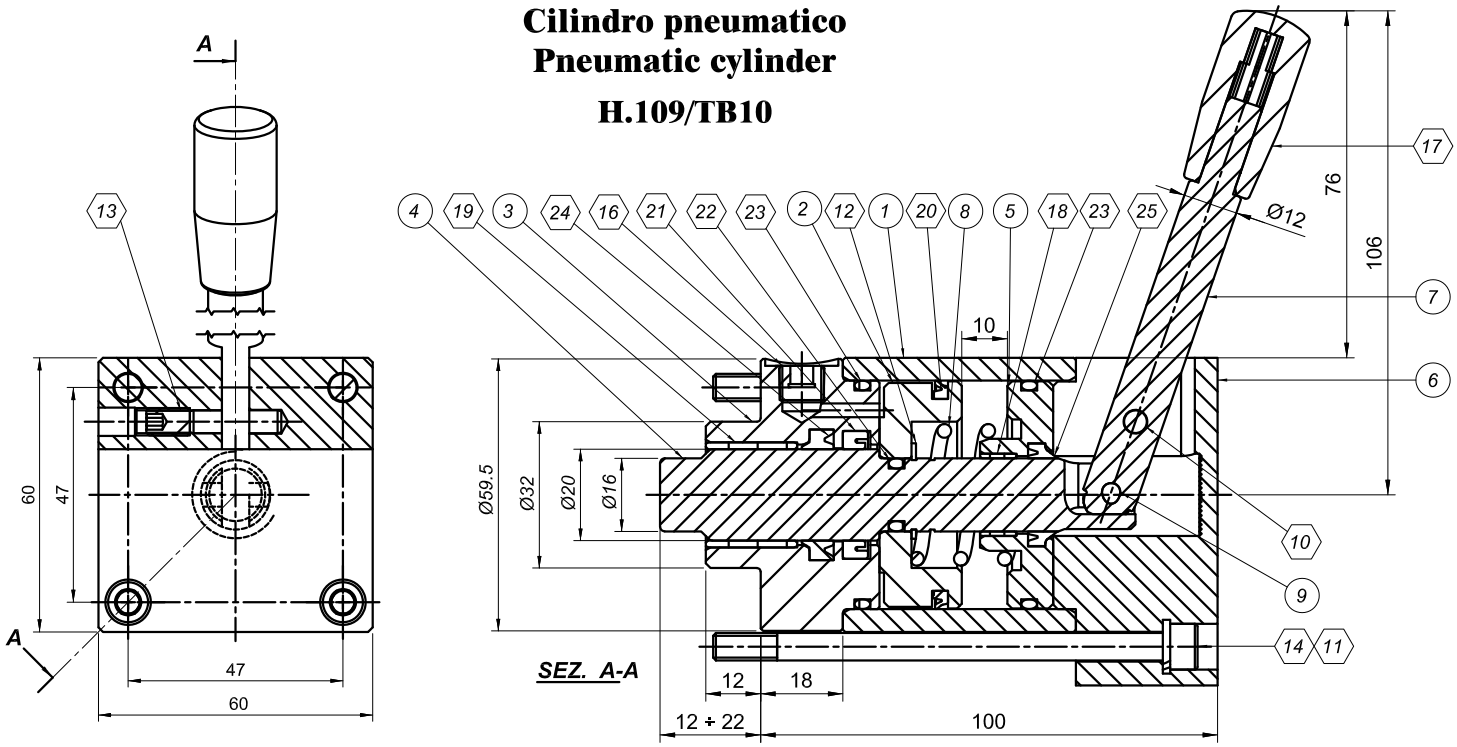

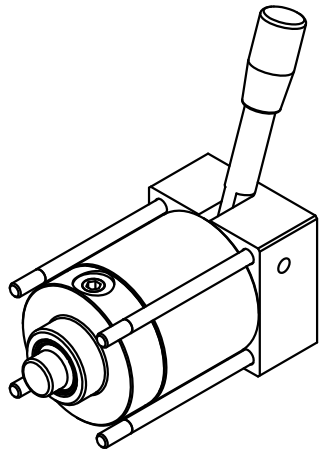

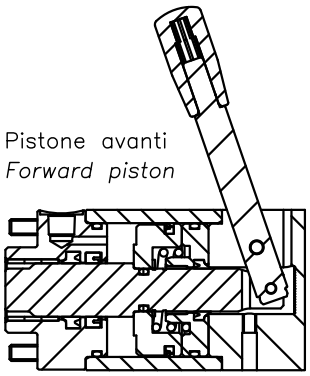

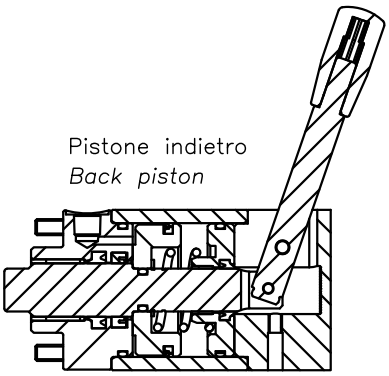

Pos.	Codice/Code	Descrizione	Description	N°
1	H.109.0-06/B	CANNA Ø50/60X51 PER H.109/TB10	HOUSING	1
2	H.109.0-41	PISTONE Ø49.7/16X18	PISTON	1
3	H.109.0-42	FLANGIA A SALDARE Ø60/22X38	WELDED FLANGE	1
4	H.109.0-43	ASTA Ø20X104 PER H.109/TB10	ROD	1
5	H.109.0-45	FLANGIA INTERMEDIA Ø49.7/17X16	MIDDLE FLANGE	1
6	H.109.0-47	SUPPORTO LEVA 60X60X36	LEVER SUPPORT	1
7	H.109.0-48	LEVA Ø12X95	LEVER	1
8	H.603.0-15	MOLLA	SPRING	1
9C	C.1707.04X015	SPINA CILINDRICA D4X15 - UNI 6364 A	CIL.PIN	1
10C	C.1707.05X020	SPINA CILINDRICA D5X20 - UNI 6364 A	CIL.PIN	1
11C	C.1751.06AA	RONDELLA ELASTICA D6 INOX	SPRING WASHER	4
12C	C.3653.016	ANELLO SEEGER E 16	EXT.CIRCLIP	1
13C	C.5923.06.A10	VITE S.T.E.I. M6X10 A2	HEX.SOCKET SET SCREW	1
14C	C.5931.06.A99	VITE T.C.E.I. M6X100 INOX A4	HEX.SOCKET HEAD CAP SCREW	4
16C	C.DIN906.1/8G	TAPPO 1/8 GAS CONICO Z.B.	HEX.SOCKET PIPE PLUG	1
17C	C.I580/40-N8	IMPUGNATURA D18X40 FORO D8	CYLINDRICAL FIXED HANDLES	1
18C	CC.PAP1608P10	BOCCOLA D16XD18X08 P10	BUSHING	1
19C	CC.PAP2020P10	BOCCOLA D20XD23X20 P10	BUSHING	1
20C	CG.NAP14205	GUARNIZIONE POLIUR.D50XD42X3.3	PISTON SEAL	1
21C	CG.NI06240	GUARNIZ. STELO D28XD20X5.5	ROD SEAL	1
22C	CG.OR2.01078	GUARNIZ. OR 3043/111	O-RING	1
23C	CG.OR2.04569	GUARNIZ. OR 3181/133	O-RING	2
24C	CG.UWR078110	ANELLO RASCHIATORE D20-RSW 20	WIPER RING	1
25C	CG.WRM062087	ANELLO RASCHIATORE D16	WIPER RING	1

Valvole a rapida chiusura con attuatore pneumatico PN6-PN16-ANSI150
Pneumatic actuator quick closing valves NP6-NP16-ANSI150

Tab.132PN

RF FLANGES: A/GS
FF FLANGES: B/G

Conform to:
UNI EN1092
ANSI B16.5

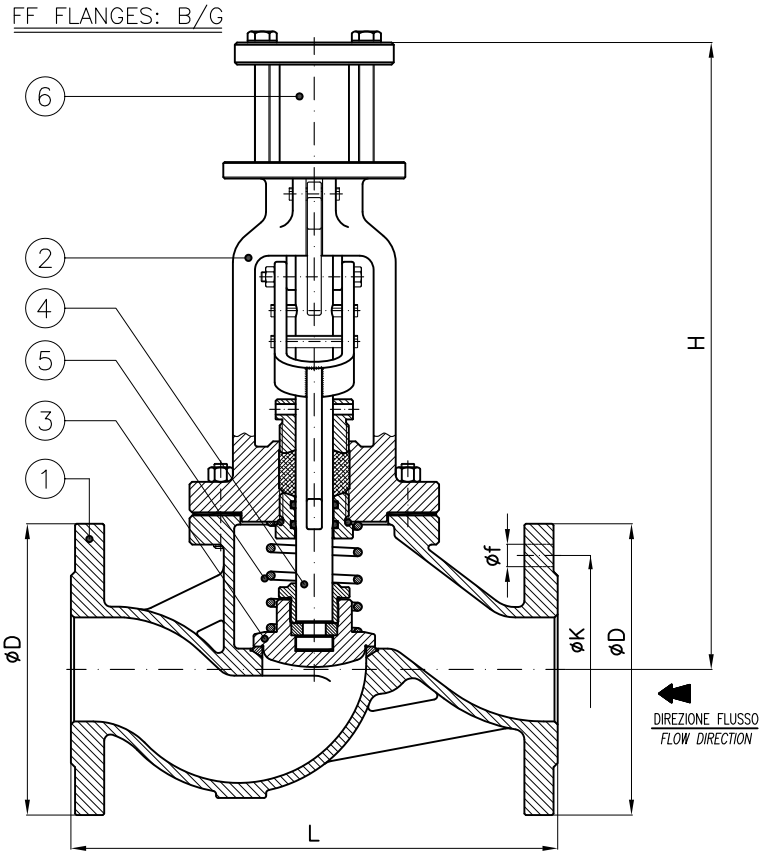

Tab.132.1PN

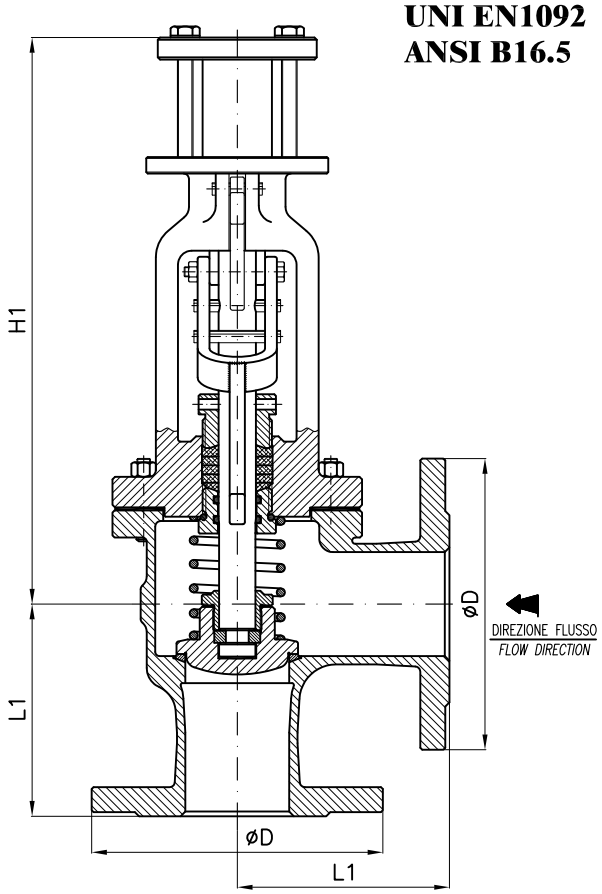

Tab.132.2PN

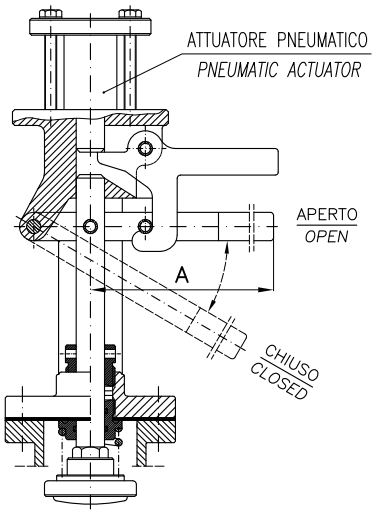

DN	H	L	Weight (≅Kg)	H1	L1	Weight (≅Kg)	A	PN6				PN16				ANSI150			
								D	K	f	Holes NO. f	D	K	f	Holes NO. f	D	K	f	Holes NO. f
20	305	150	9	290	85	10	325	90	65	11	4	105	75	14	4	98.4	70	16	4
25	310	160	11	295	90	11	325	100	75	11	4	115	85	14	4	108	79	16	4
32	365	180	16.5	340	105	18	360	120	90	14	4	140	100	18	4	118	89	16	4
40	370	200	17	345	115	18.5	360	130	100	14	4	150	110	18	4	127	98	16	4
50	375	230	19	345	125	21	360	140	110	14	4	165	125	18	4	152	121	19	4
65	400	290	27	365	145	25	405	160	130	14	4	185	145	18	4	178	140	19	4
80	435	310	32	395	155	29	405	190	150	18	4	200	160	18	8	190	152	19	4
100	490	350	49	430	175	45	445	210	170	18	4	220	180	18	8	229	191	19	8
125	505	400	64	440	200	60	445	240	200	18	8	250	210	18	8	254	216	22	8
150	520	480	81	445	225	73	445	265	225	18	8	285	240	22	8	279	241	22	8
200	605	600	139	495	275	125	455	320	280	18	8	340	295	22	12	343	298	22	8

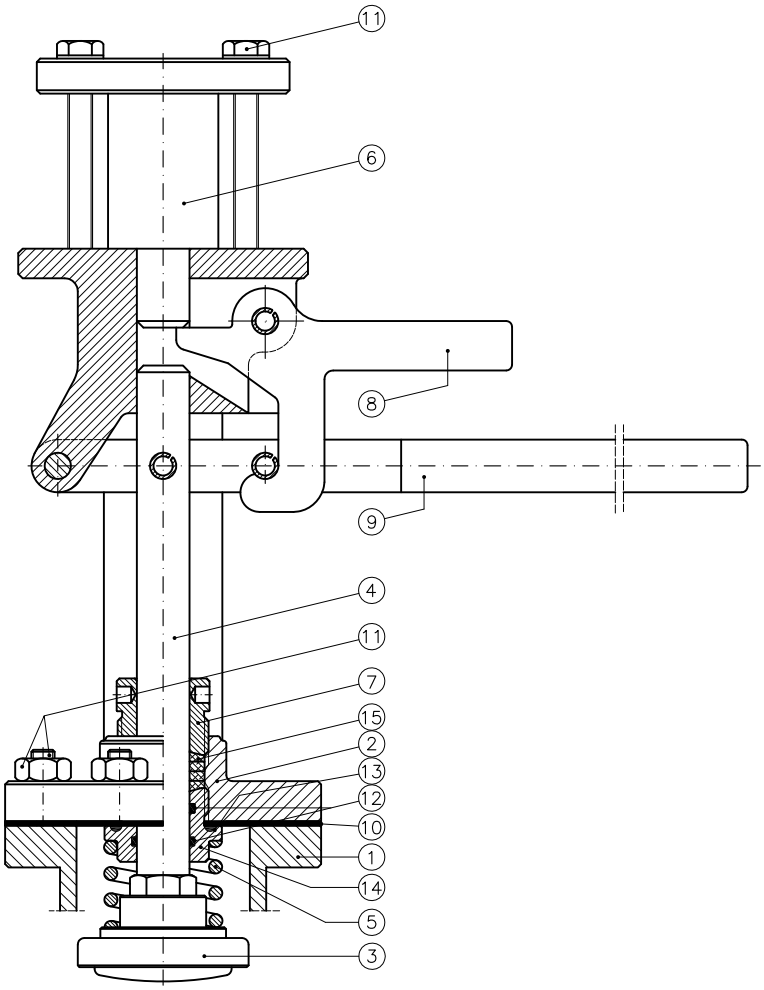

Combinazione materiali standard – Standard materials Combination					
		GS/316	A/316	B/316	G/316
ITEM	DENOMINAZIONE DENOMINATION	MATERIALE MATERIAL	MATERIALE MATERIAL	MATERIALE MATERIAL	MATERIALE MATERIAL
01	Body	Nodular cast iron EN-GJS-400-15U UNI EN1563	Cast steel GP240-GH UNI EN10213	Bronze UNI EN1982 G-CuSn5Zn5Pb5	Cast iron UNI EN1561 EN-GJL-250
02	Bonnet	Nodular cast iron EN-GJS-400-15U UNI EN1563	Nodular cast iron EN-GJS-400-15U UNI EN1563	Bronze UNI EN1982 G-CuSn5Zn5Pb5	Nodular cast iron EN-GJS-400-15U UNI EN1563
03	Disc (≤ DN80)	Stainless steel AISI316 UNI EN10088	Stainless steel AISI316 UNI EN10088	Stainless steel AISI316 UNI EN10088	Stainless steel AISI316 UNI EN10088
03	Disc (≥ DN100)	Cast steel GP240-GH UNI EN10213 plus AISI316 facing welding	Cast steel GP240-GH UNI EN10213 plus AISI316 facing welding	Cast steel GP240-GH UNI EN10213 plus AISI316 facing welding	Cast steel GP240-GH UNI EN10213 plus AISI316 facing welding
04	Stem	Stainless steel AISI316 UNI EN10088	Stainless steel AISI316 UNI EN10088	Stainless steel AISI316 UNI EN10088	Stainless steel AISI316 UNI EN10088
05	Spring	Steel UNI EN10270	Steel UNI EN10270	Steel UNI EN10270	Steel UNI EN10270
06	Pneumatic actuator	Carbon steel	Carbon steel	Carbon steel	Carbon steel
07	Stuffing box	Steel UNI EN10025	Steel UNI EN10025	Brass CW617N (OT58)	Steel UNI EN10025
08	Release lever	Steel UNI EN10025	Steel UNI EN10025	Steel UNI EN10025	Steel UNI EN10025
09	Resetting lever	Steel UNI EN10025	Steel UNI EN10025	Steel UNI EN10025	Steel UNI EN10025
10	Gasket	Planiflex KG carbo/C PF81	Planiflex KG carbo/C PF81	Planiflex KG carbo/C PF81	Planiflex KG carbo/C PF81
11	Nut	Galvanized Steel 8.8 EN20898-1	Galvanized Steel 8.8 EN20898-1	Galvanized Steel 8.8 EN20898-1	Galvanized Steel 8.8 EN20898-1
12	OR gasket	Viton	Viton	Viton	Viton
13	OR gasket	NBR	NBR	NBR	NBR
14	Gland	AVP Steel UNI EN10277	AVP Steel UNI EN10277	Brass CW617N (OT58)	AVP Steel UNI EN10277
15	Packing	Kevlar graphite KGL	Kevlar graphite KGL	Kevlar graphite KGL	Kevlar graphite KGL
Nota: Combinazioni materiali non standard a richiesta Note: Non standard materials combinations on request					

Attuatore pneumatico
Pneumatic actuator
H.109/0005

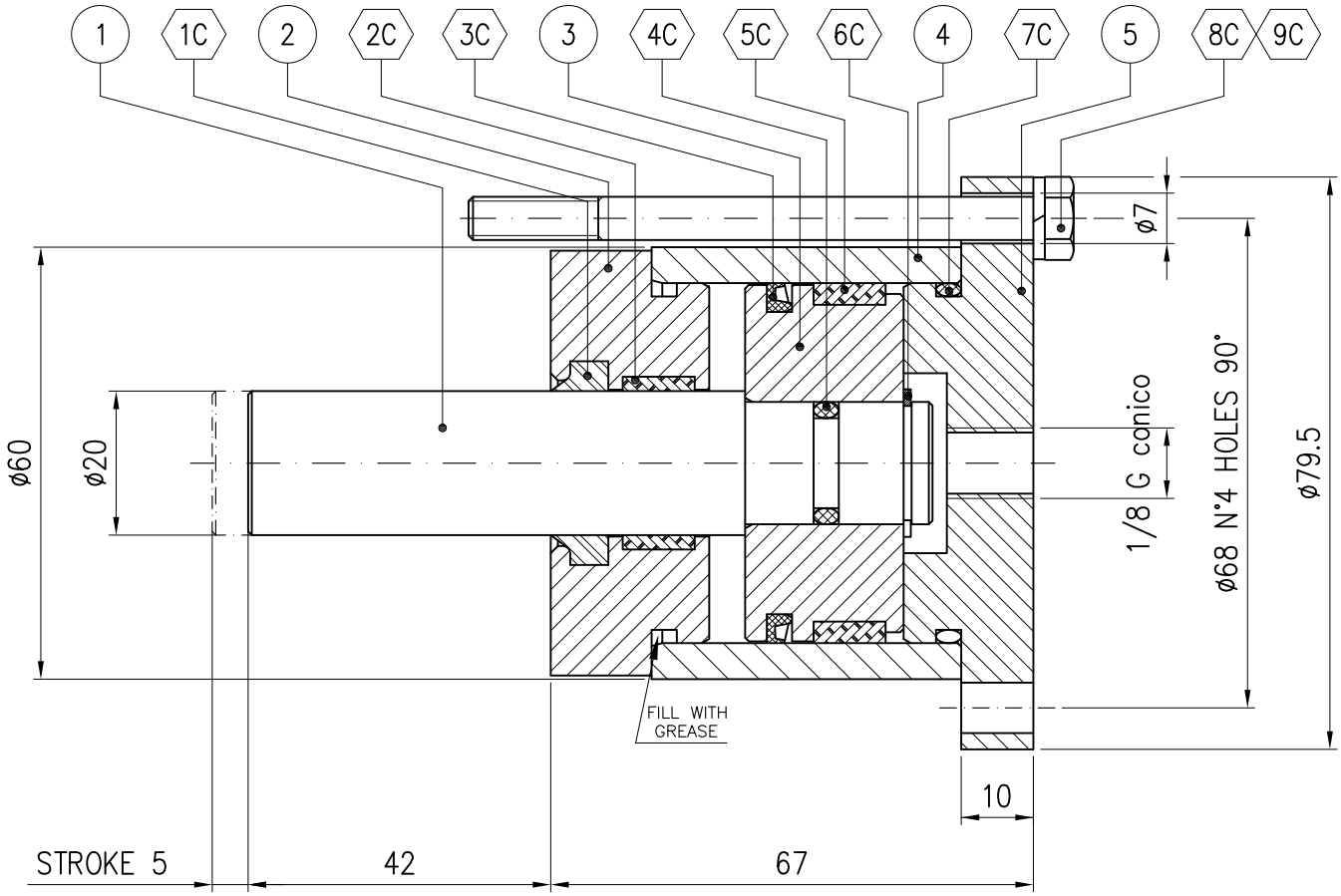

POS	CODICE/CODE	DESCRIZIONE	DESCRIPTION	Npm	NOTE
1	H.109.0-03	ASTA D20 PER H.109/0005	PUSH ROD	1	
2	H.109.0-04	TESTATA 50/20	HEAD FLANGE	1	
3	H.109.0-01	PISTONE D50 CON FORO D17	PISTON	1	
4	H.109.0-06/A	CANNA D50XD60 PER H.109/0005	HOUSING	1	
5	H.109.0-05	FLANGIA POSTERIORE D80XD50X18	REAR FLANGE	1	

POS	CODICE/CODE	DESCRIZIONE	DESCRIPTION	Npm	NOTE
1C	CG.UWR078110	ANELLO RASCHIATORE D20-RSW 20	WIPER RING	1	
2C	CG.I/DWR20/2	ANELLO GUIDA I20	INT.SLIDE BEARING	1	
3C	CG.NAP14205	GUARNIZIONE POLIUR.D50XD42X3.3	PISTON SEAL	1	
4C	CG.OR2.01237	GUARNIZ. OR 3050/112	O-RING	1	
5C	CG.E/DWR50	ANELLO GUIDA E50	EXT.SLIDE BEARING	1	
6C	C.3653.017	ANELLO SEEGER E 17	EXT.CIRCLIP	1	
7C	CG.OR2.04569	GUARNIZ. OR 3181/133	O-RING	1	
8C	C.5737.06X080	VITE T.E. M6X80 8.8 Z.B.	HEX.HEAD SCREW	4	
9C	C.1751.06A	RONDELLA ELASTICA D6 Z.B.	SPRING WASHER	4	

Valvole a rapida chiusura con contrappeso PN6-PN16
Self- closing valves, weight loaded NP6-NP16

Tab.133

RF FLANGES: A/GS
FF FLANGES: B/G

Conform to:
UNI EN1092

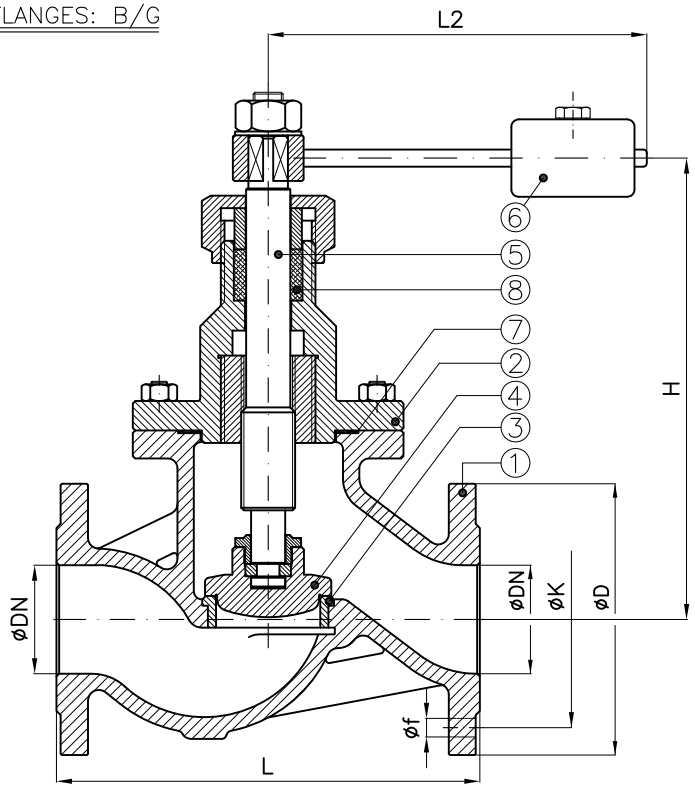

Tab.133.1

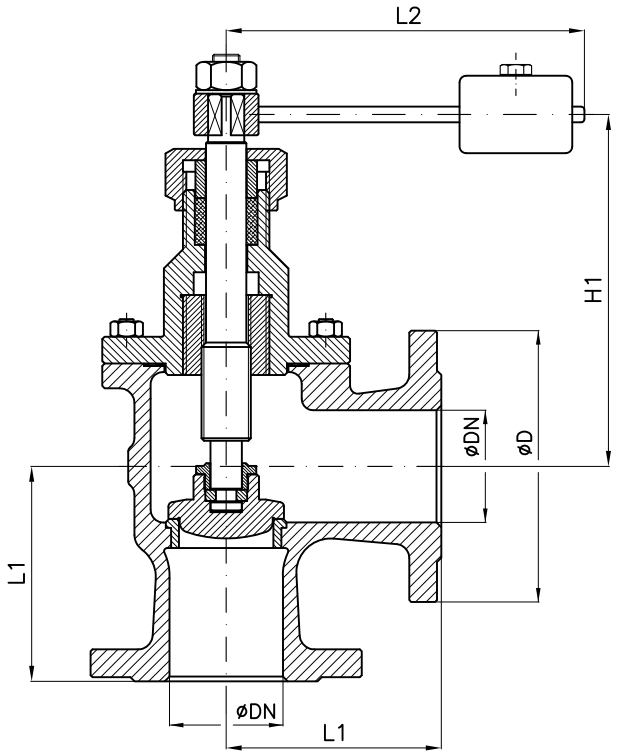

Tab.133.2

DN	H	L	Weight (≃Kg)	H1	L1 PN6	L1 PN16	Weight (≃Kg)	L2	PN6 D	PN6 K	PN6 f	PN6 Holes NO. f	PN16 D	PN16 K	PN16 f	PN16 Holes NO. f
20	155	150	7.5	130	85	85		190	90	65	11	4	105	75	14	4
25	190	160	9	135	90	90		190	100	75	11	4	115	85	14	4
32	190	180		160	105	105		190	120	90	14	4	140	100	18	4
40	210	200	12	190	95	115		235	130	100	14	4	150	110	18	4
50	230	230		195	100	125	14	235	140	110	14	4	165	125	18	4
65	275	290	22	235	120	145		295	160	130	14	4	185	145	18	4
80	280	310	26	240	130	155		295	190	150	18	4	200	160	18	8
100	325	350		265	150	175			210	170	18	4	220	180	18	8
125	370	400		300	175	200			240	200	18	8	250	210	18	8
150	395	480		315	200	225			265	225	18	8	285	240	22	8
175	460	550		365	230	250			295	255	18	8	315	270	22	8
200	480	600		375	250	275			320	280	18	8	340	295	22	12

Combinazione materiali standard – Standard materials Combination					
		A/316	B/316	G/316	GS/316
ITEM	DENOMINAZIONE DENOMINATION	MATERIALE MATERIAL	MATERIALE MATERIAL	MATERIALE MATERIAL	MATERIALE MATERIAL
01	Body	Cast steel GP240-GH UNI EN10213	Bronze UNI EN1982 G-CuSn5Zn5Pb5	Cast iron UNI EN1561 EN-GJL-250	Nodular cast iron EN-GJS-400-15U UNI EN1563
02	Bonnet	Cast steel GP240-GH UNI EN10213	Bronze UNI EN1982 G-CuSn5Zn5Pb5	Cast iron UNI EN1561 EN-GJL-250	Nodular cast iron EN-GJS-400-15U UNI EN1563
03	Body seat	Stainless steel AISI316 UNI EN10088	Bronze UNI EN1982 G-CuSn5Zn5Pb5	Stainless steel AISI316 UNI EN10088	Stainless steel AISI316 UNI EN10088
04	Disc (≤ DN80)	Stainless steel AISI316 UNI EN10088	Stainless steel AISI316 UNI EN10088	Stainless steel AISI316 UNI EN10088	Stainless steel AISI316 UNI EN10088
04	Disc (≥ DN100)	Cast steel GP240-GH UNI EN10213 plus AISI316 facing welding	Stainless steel AISI316 UNI EN10088	Cast steel GP240-GH UNI EN10213 plus AISI316 facing welding	Cast steel GP240-GH UNI EN10213 plus AISI316 facing welding
05	Stem	Stainless steel AISI316 UNI EN10088	Stainless steel AISI316 UNI EN10088	Stainless steel AISI316 UNI EN10088	Stainless steel AISI316 UNI EN10088
06	Counterweight	Cast iron UNI EN1561 EN-GJL-250	Cast iron UNI EN1561 EN-GJL-250	Cast iron UNI EN1561 EN-GJL-250	Cast iron UNI EN1561 EN-GJL-250
07	Gasket	Planiflex KG carbo/C PF81	Planiflex KG carbo/C PF81	Planiflex KG carbo/C PF81	Planiflex KG carbo/C PF81
08	Packing	Kevlar graphite KGL	Kevlar graphite KGL	Kevlar graphite KGL	Kevlar graphite KGL

Nota: Combinazioni materiali non standard a richiesta
Note: Non standard materials combinations on request

Conform to:
UNI EN1092
DIN 3202

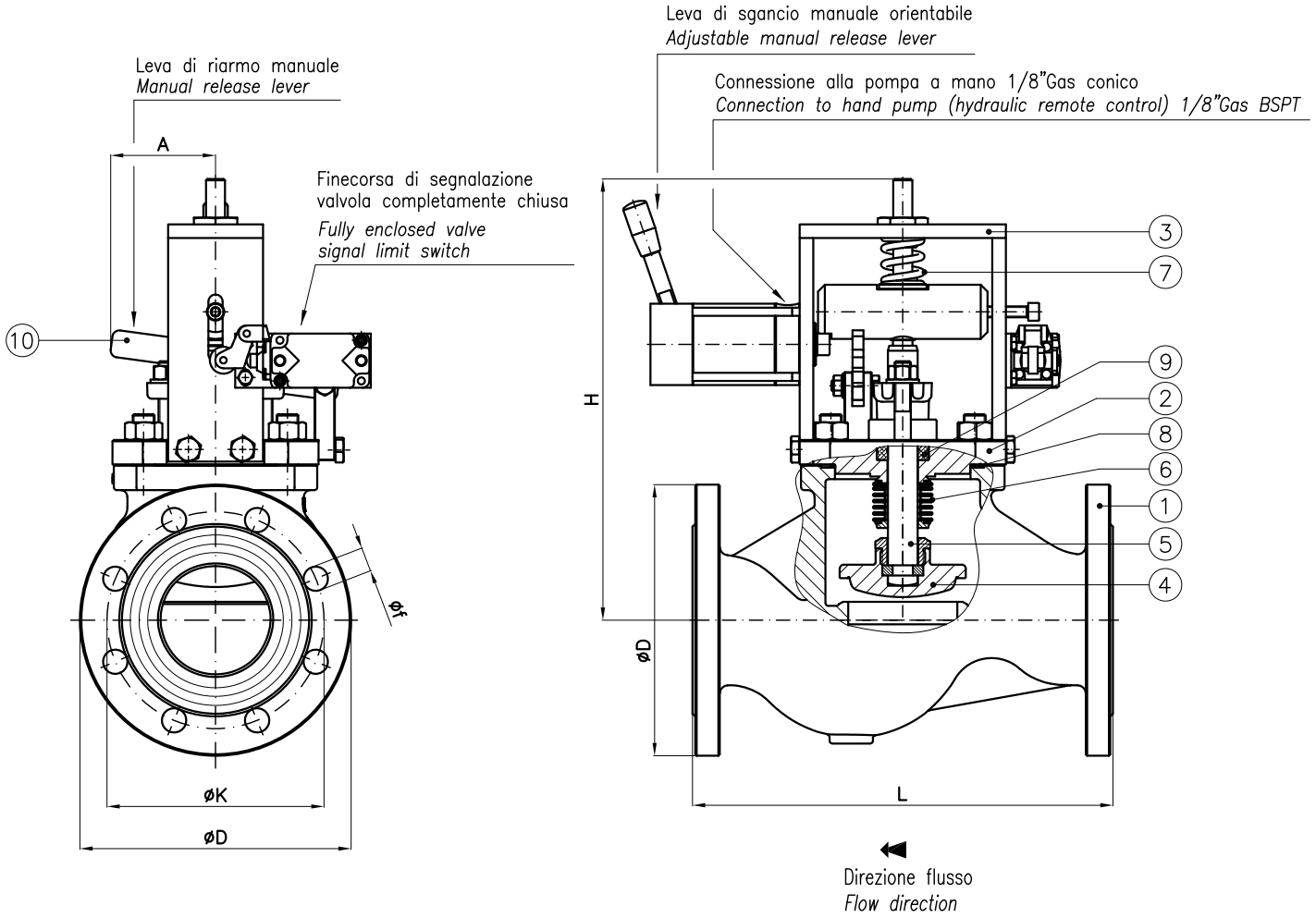

Prolunga per leva di riarmo manuale (lunghezza 250mm.) fissata al coperchio in dotazione ad ogni valvola.
Extension for manual release lever (length 250mm.) fixed to the bonnet and supplied each valve.

DN	A	L	H (~)	D	K	f	n°fori f
20	80	150	235	105	75	14	4
25	80	160	245	115	85	14	4
32	80	180	260	140	100	18	4
40	80	200	270	150	110	18	4
50	80	230	280	165	125	18	4
65	80	290	310	185	145	18	4
80	80	310	330	200	160	18	8
100	90	350	360	220	180	18	8
125	110	400	400	250	210	18	8
150	120	480	420	285	240	22	8
200	155	600	550	340	295	22	12
250	180	730	600	405	355	26	12

POS	DENOMINATION	MATERIAL
1	Body	Stainless steel CF8M ASTM A351
2	Bonnet	Stainless steel AISI316(1.4401) UNI EN10088
3	Stand	Carbon steel GP240-GH UNI EN10213
4	Disc	Stainless steel AISI316(1.4401) UNI EN10088
5	Stem	Stainless steel AISI316(1.4401) UNI EN10088
6	Bellows	Stainless steel AISI321(1.4541) UNI EN10088
7	Spring	Steel UNI EN10270-1-SH
8	Gasket	Stainless steel AISI316 + Graphite
9	Packing	Carbograph GR8800
10	Manual release lever	Carbon steel GP240-GH UNI EN10213

Cilindro idraulico
Hydraulic cylinder
H.109/TB10H

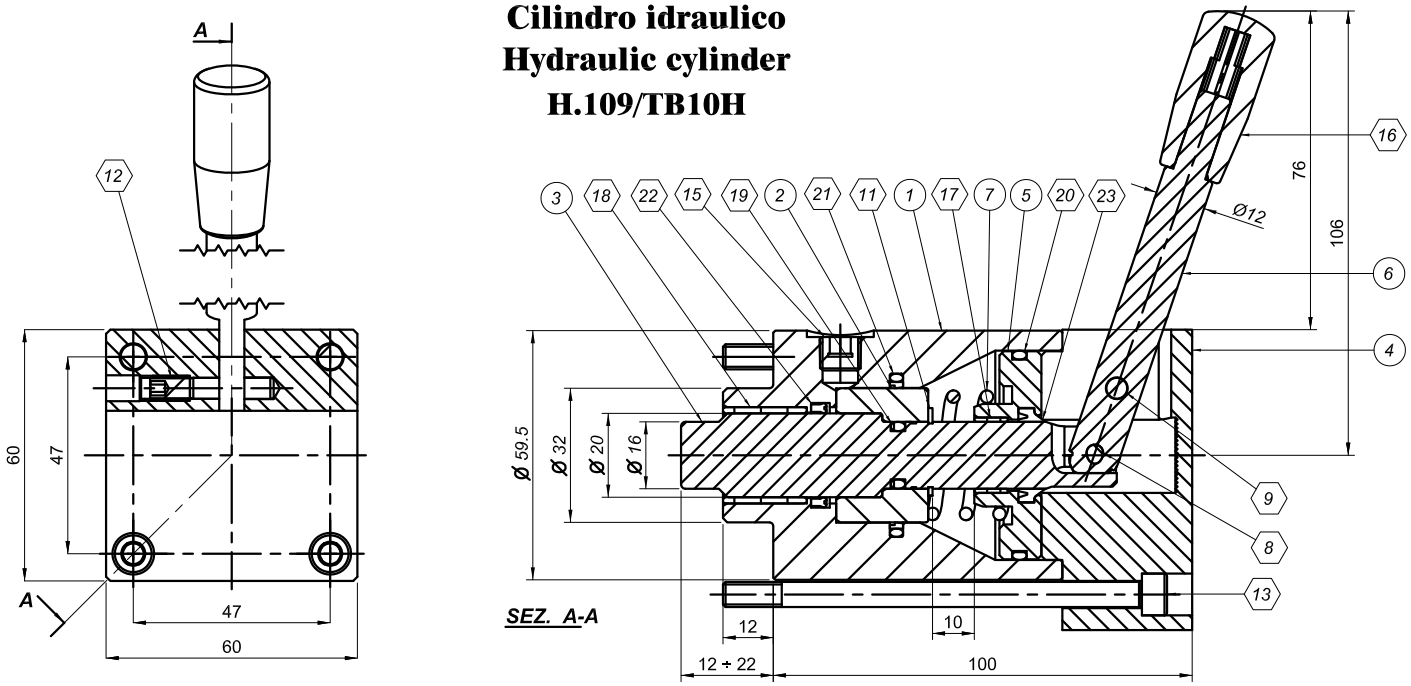

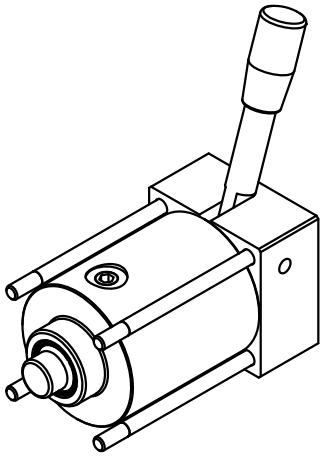

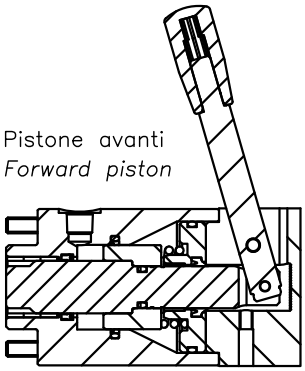

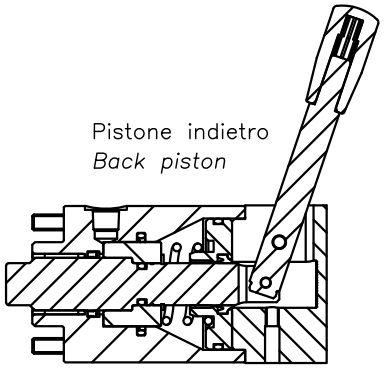

Pos.	Codice/Code	Descrizione	Description	N°
1	H.109.0-56	CORPO Ø60 x L.81	BODY	1
2	H.109.0-51	PISTONE Ø32/Ø16X18	PISTON	1
3	H.109.0-43	ASTA Ø20X104 PER H.109/TB10	ROD	1
4	H.109.0-47	SUPPORTO LEVA 60X60X36	LEVER SUPPORT	1
5	H.109.0-45	FLANGIA INTERMEDIA Ø49.7/17X16	MIDDLE FLANGE	1
6	H.109.0-48	LEVA Ø12X95	LEVER	1
7	H.603.0-15	MOLLA	SPRING	1
8C	C.1707.04X015	SPINA CILINDRICA D4X15 - UNI 6364 A	CIL.PIN	1
9C	C.1707.05X020	SPINA CILINDRICA D5X20 - UNI 6364 A	CIL.PIN	1
11C	C.3653.016	ANELLO SEEGER E 16	EXT.CIRCLIP	1
12C	C.5923.06.A10	VITE S.T.E.I. M6X10 A2	HEX.SOCKET SET SCREW	1
13C	C.5931.06.A99	VITE T.C.E.I. M6X100 INOX A4	HEX.SOCKET HEAD CAP SCREW	4
15C	C.DIN906.1/8G	TAPPO 1/8 GAS CONICO Z.B.	HEX.SOCKET PIPE PLUG	1
16C	C.I580/40-N8	IMPUGNATURA D18X40 FORO D8	CYLINDRICAL FIXED HANDLES	1
17C	CC.PAP1608P10	BOCCOLA D16XD18X08 P10	BUSHING	1
18C	CC.PAP2020P10	BOCCOLA D20XD23X20 P10	BUSHING	1
19C	CG.OR2.01078	GUARNIZ. OR 3043/111	O-RING	1
20C	CG.OR2.04569	GUARNIZ. OR 3181/133	O-RING	1
21C	CG.SHT03203903	GUARNIZIONE ASTA D32XD39X3.2	ROD SEAL	1
22C	CG.TS20254/L	GUARN.ASTA POLIUR. D25XD20X4	ROD SEAL	1
23C	CG.WRM062087	ANELLO RASCHIATORE D16	WIPER RING	1

Conform to:
UNI EN1092
DIN 3202

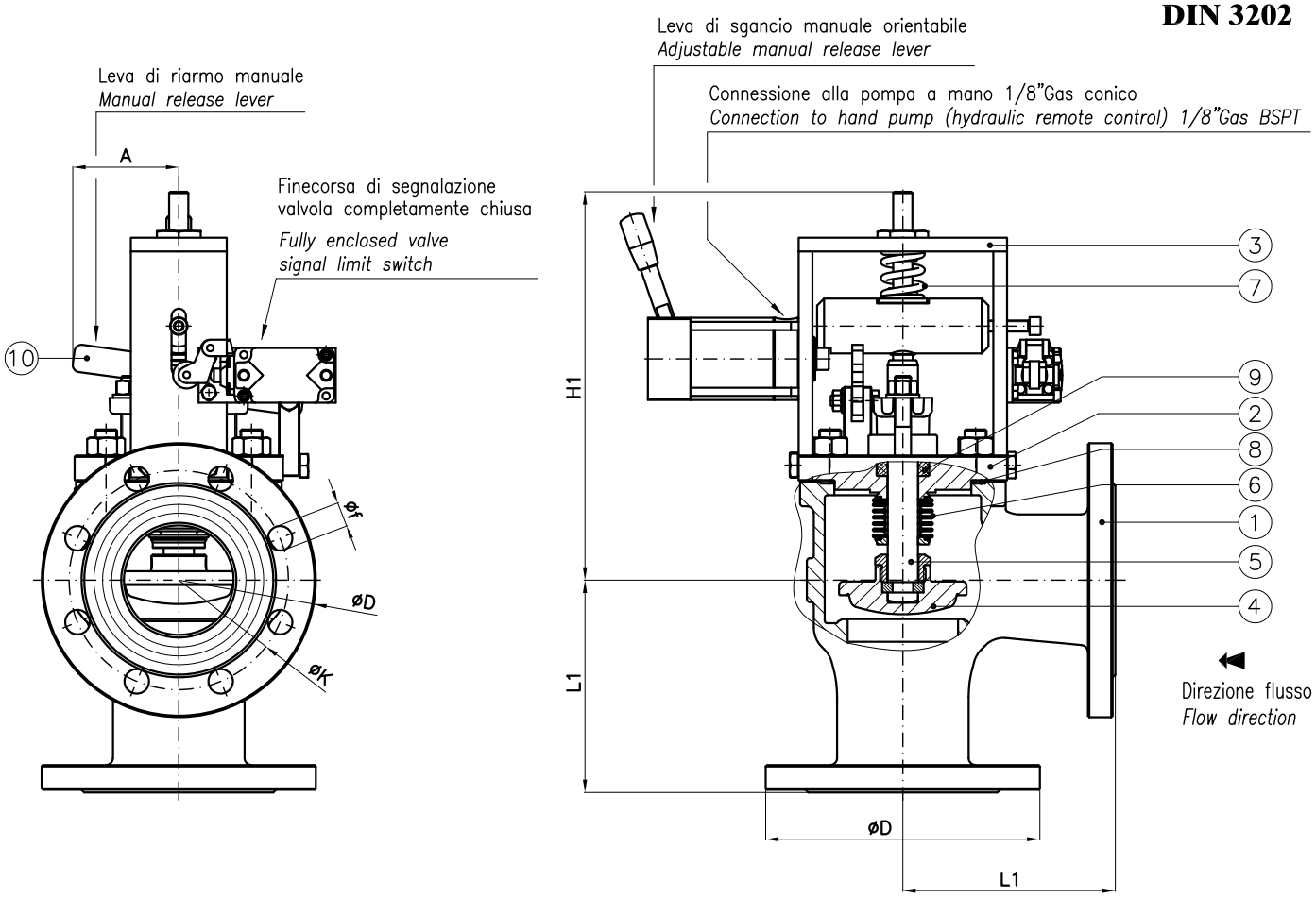

Prolunga per leva di riarmo manuale (lunghezza 250mm.) fissata al coperchio in dotazione ad ogni valvola

Extension for manual release lever (length 250mm.) fixed to the bonnet and supplied each valve

DN	A	L1	H1 (~)	D	K	f	n°fori f
20	80	85	240	105	75	14	4
25	80	90	255	115	85	14	4
32	80	105	270	140	100	18	4
40	80	115	305	150	110	18	4
50	80	125	315	165	125	18	4
65	80	145	340	185	145	18	4
80	80	155	375	200	160	18	8
100	90	175	395	220	180	18	8
125	110	200	430	250	210	18	8
150	120	225	460	285	240	22	8
200	155	275	570	340	295	22	12
250	180	325	640	405	355	26	12

POS	DENOMINATION	MATERIAL
1	Body	Stainless steel CF8M ASTM A351
2	Bonnet	Stainless steel AISI316(1.4401) UNI EN10088
3	Stand	Carbon steel GP240-GH UNI EN10213
4	Disc	Stainless steel AISI316(1.4401) UNI EN10088
5	Stem	Stainless steel AISI316(1.4401) UNI EN10088
6	Bellows	Stainless steel AISI321(1.4541) UNI EN10088
7	Spring	Steel UNI EN10270-1-SH
8	Gasket	Stainless steel AISI316 + Graphite
9	Packing	Carbograph GR8800
10	Manual release lever	Carbon steel GP240-GH UNI EN10213

Cilindro idraulico
Hydraulic cylinder
H.109/TB10H

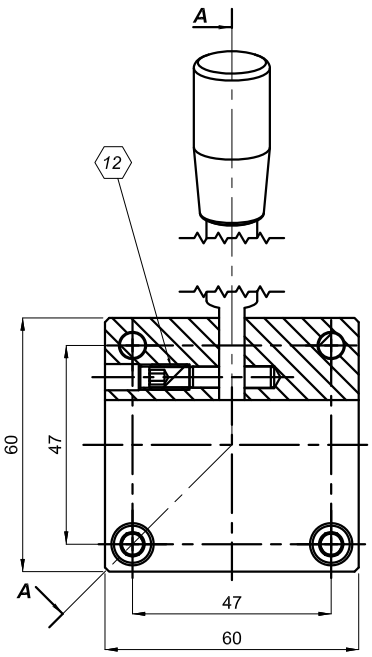

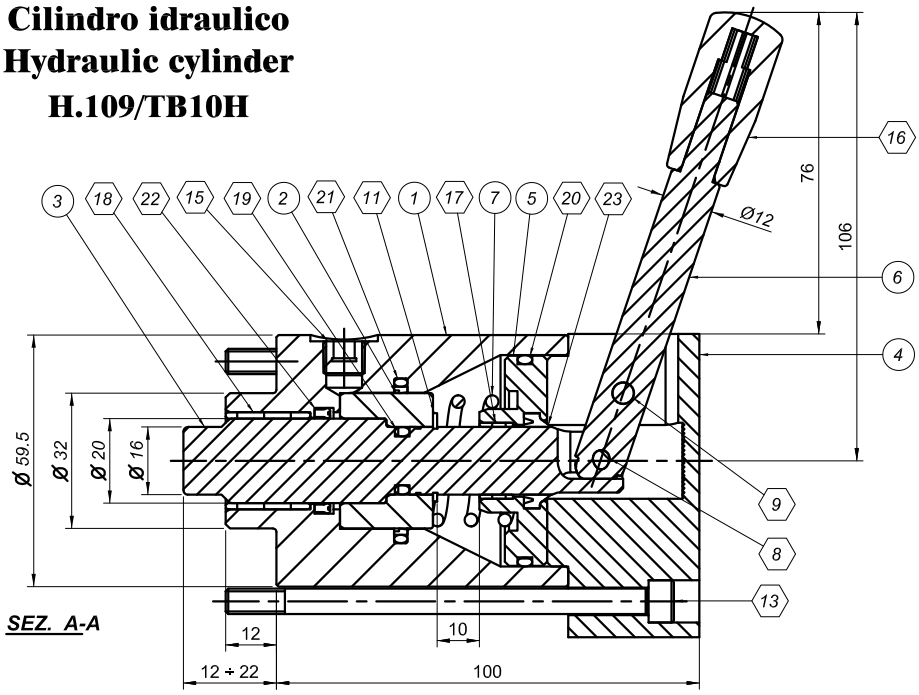

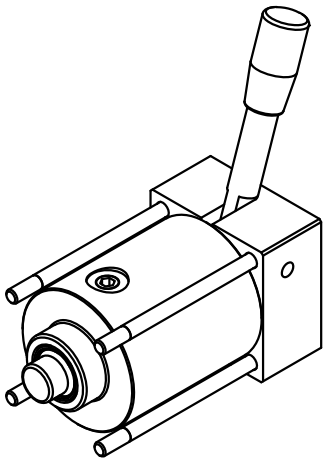

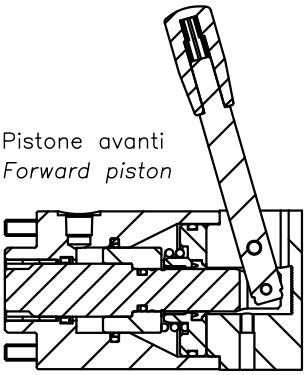

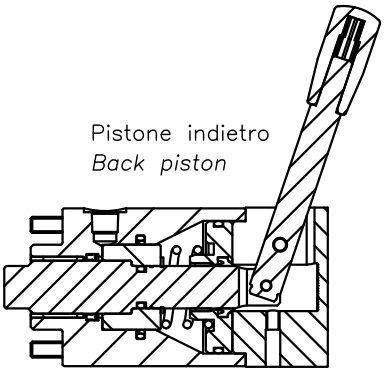

Pos.	Codice/Code	Descrizione	Description	N°
1	H.109.0-56	CORPO Ø60 x L.81	BODY	1
2	H.109.0-51	PISTONE Ø32/Ø16X18	PISTON	1
3	H.109.0-43	ASTA Ø20X104 PER H.109/TB10	ROD	1
4	H.109.0-47	SUPPORTO LEVA 60X60X36	LEVER SUPPORT	1
5	H.109.0-45	FLANGIA INTERMEDIA Ø49.7/17X16	MIDDLE FLANGE	1
6	H.109.0-48	LEVA Ø12X95	LEVER	1
7	H.603.0-15	MOLLA	SPRING	1
8C	C.1707.04X015	SPINA CILINDRICA D4X15 - UNI 6364 A	CIL.PIN	1
9C	C.1707.05X020	SPINA CILINDRICA D5X20 - UNI 6364 A	CIL.PIN	1
11C	C.3653.016	ANELLO SEEGER E 16	EXT.CIRCLIP	1
12C	C.5923.06.A10	VITE S.T.E.I. M6X10 A2	HEX.SOCKET SET SCREW	1
13C	C.5931.06.A99	VITE T.C.E.I. M6X100 INOX A4	HEX.SOCKET HEAD CAP SCREW	4
15C	C.DIN906.1/8G	TAPPO 1/8 GAS CONICO Z.B.	HEX.SOCKET PIPE PLUG	1
16C	C.I580/40-N8	IMPUGNATURA D18X40 FORO D8	CYLINDRICAL FIXED HANDLES	1
17C	CC.PAP1608P10	BOCCOLA D16XD18X08 P10	BUSHING	1
18C	CC.PAP2020P10	BOCCOLA D20XD23X20 P10	BUSHING	1
19C	CG.OR2.01078	GUARNIZ. OR 3043/111	O-RING	1
20C	CG.OR2.04569	GUARNIZ. OR 3181/133	O-RING	1
21C	CG.SHT03203903	GUARNIZIONE ASTA D32XD39X3.2	ROD SEAL	1
22C	CG.TS20254/L	GUARN.ASTA POLIUR. D25XD20X4	ROD SEAL	1
23C	CG.WRM062087	ANELLO RASCHIATORE D16	WIPER RING	1

Valvole a rapida chiusura con telecomando idraulico serie IRP PN6-PN16
Hydraulic remote control quick closing valves IRP type NP6-NP16

Tab.132 IRP-Hydr

Conform to:
UNI EN1092
DIN 3202

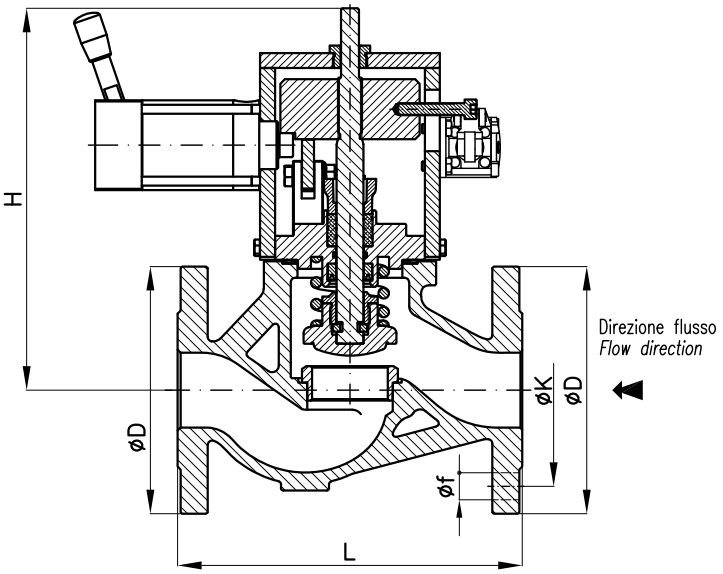

Tab. 132.1 IRP-Hydr

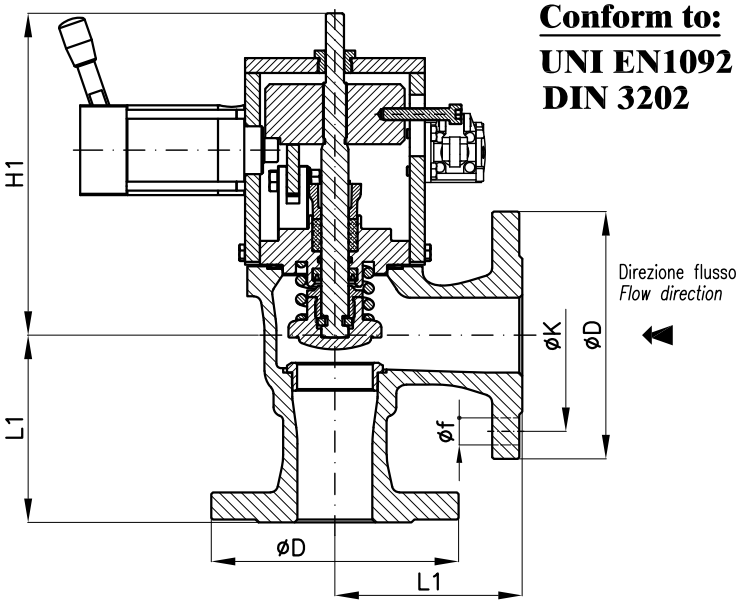

Tab. 132.2 IRP-Hydr

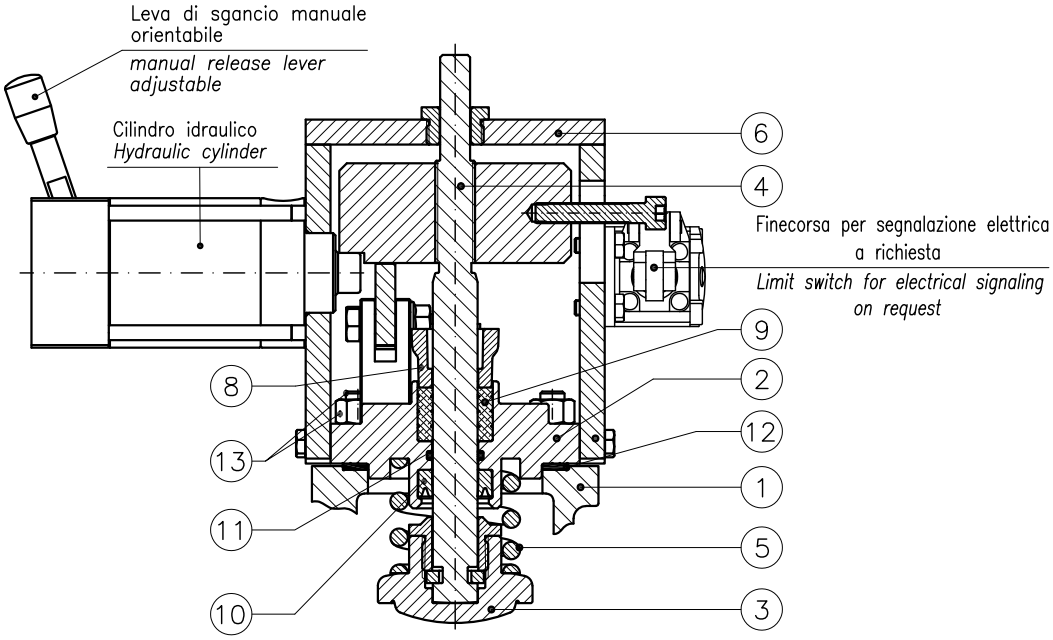

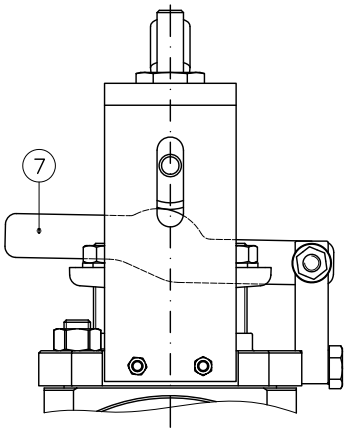

N.B.: Prolunga per leva di riarmo (da inserire su leva 7) fissata al coperchio e in dotazione ad ogni valvola

N.B.: Extension for release lever (insert on lever 7) fixed to the bonnet and supplied with each valve

					PN6				PN16			
DN	H (Aperta) (Open) (~)	L	H1 (Aperta) (Open) (~)	L1	D	K	f	Holes NO. f	D	K	f	Holes NO. f
20	205	150	185	85	90	65	11	4	105	75	14	4
25	210	160	190	90	100	75	11	4	115	85	14	4
32	240	180	215	105	120	90	14	4	140	100	18	4
40	250	200	245	115	130	100	14	4	150	110	18	4
50	260	230	220	125	140	110	14	4	165	125	18	4
65	285	290	250	145	160	130	14	4	185	145	18	4
80	310	310	270	155	190	150	18	4	200	160	18	8
100	345	350	285	175	210	170	18	4	220	180	18	8
125	365	400	300	200	240	200	18	8	250	210	18	8
150	385	480	335	225	265	225	18	8	285	240	22	8
200	535	600	425	275	320	280	18	8	340	295	22	12

Combinazione materiali standard – Standard materials Combination

ITEM	DENOMINAZIONE DENOMINATION	A/316 MATERIALE MATERIAL	CF8M/316 MATERIALE MATERIAL	GS/316 MATERIALE MATERIAL
01	Body	Cast steel GP240-GH UNI EN10213	Stainless steel CF8M ASTM A351	Nodular cast iron EN-GJS-400-15U UNI EN1563
02	Bonnet	Carbon Steel UNI EN10025	Stainless steel AISI316 UNI EN10088	Carbon Steel UNI EN10025
03	Disc (≤ DN80)	Stainless steel AISI316 UNI EN10088	Stainless steel AISI316 UNI EN10088	Stainless steel AISI316 UNI EN10088
03	Disc (≥ DN100)	Cast steel GP240-GH UNI EN10213 Plus AISI316 facing welding	Stainless steel CF8M ASTM A351	Cast steel GP240-GH UNI EN10213 Plus AISI316 facing welding
04	Stem	Stainless steel AISI316 UNI EN10088	Stainless steel AISI316 UNI EN10088	Stainless steel AISI316 UNI EN10088
05	Spring	Steel UNI EN10270	Stainless steel AISI316 UNI EN10151	Steel UNI EN10270
06	Bracket	Steel UNI EN10025	Steel UNI EN10025	Steel UNI EN10025
07	Release lever	Steel UNI EN10025	Steel UNI EN10025	Steel UNI EN10025
08	Gland bushing	Brass CW509L (OT60)	Brass CW509L (OT60)	Brass CW509L (OT60)
09	Packing	Kevlar graphite KGL	Kevlar graphite KGL	Kevlar graphite KGL
10	Seal ring	NBR	NBR	NBR
11	OR Gasket	Viton	Viton	Viton
12	Gasket	Planiflex KG carbo/C PF81	Planiflex KG carbo/C PF81	Planiflex KG carbo/C PF81
13	Nuts and Bolts	Galvanized Steel 8.8 EN20898-1	Stainless steel B8M/Gr.8M	Galvanized Steel 8.8 EN20898-1

Nota: Combinazioni materiali non standard a richiesta
Note: Non standard materials combinations on request

Cilindro idraulico
Hydraulic cylinder
H.109/TB10H

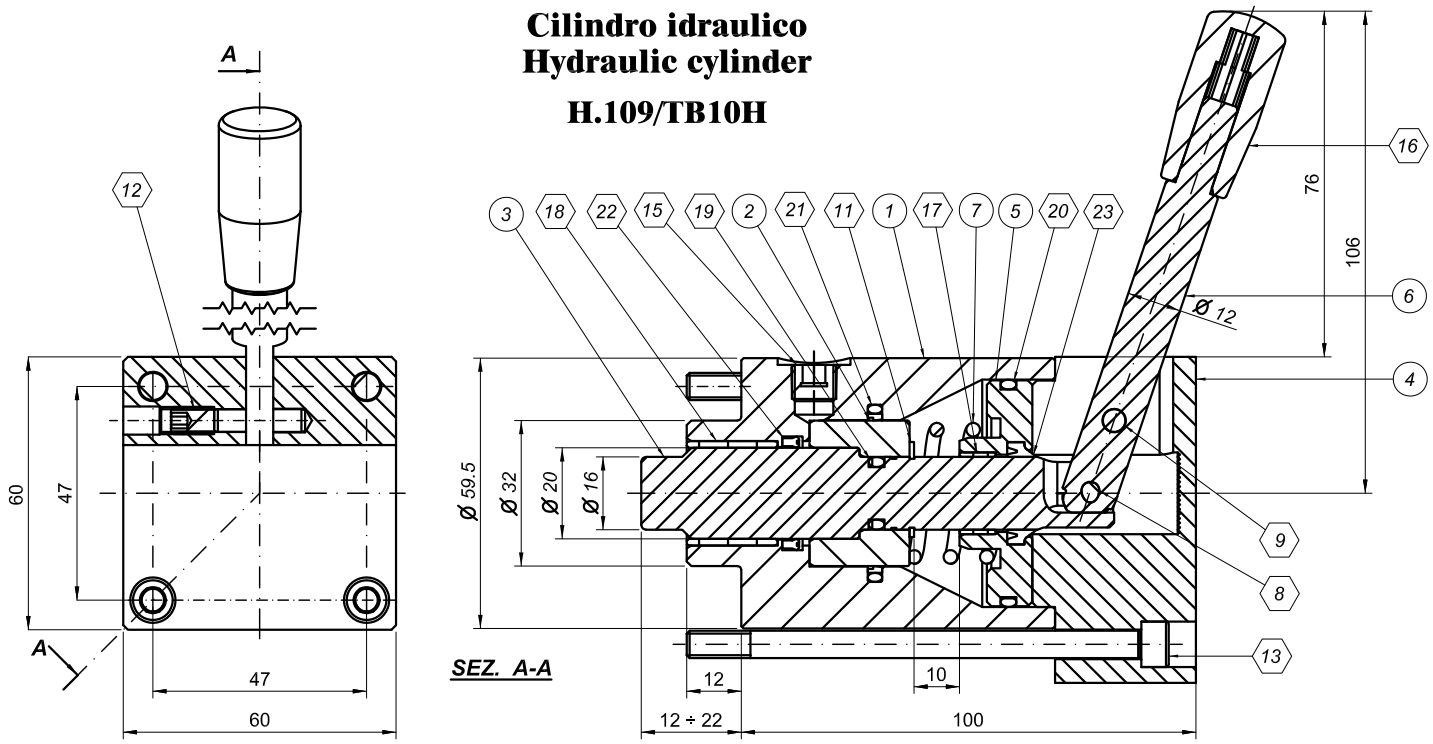

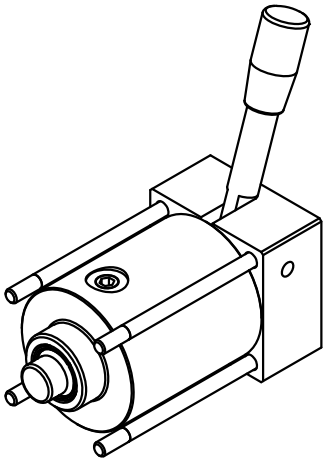

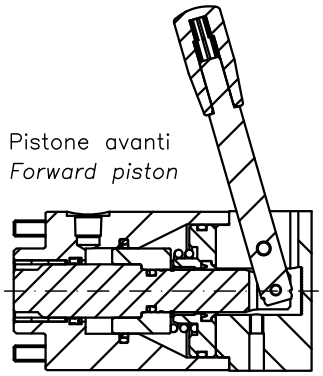

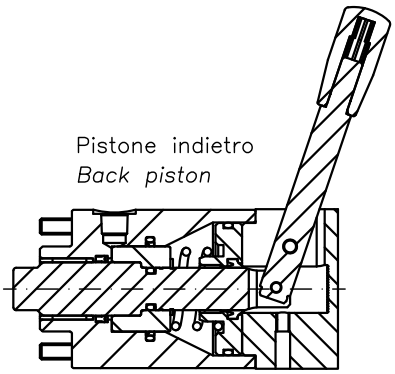

Pos.	Codice/Code	Descrizione	Description	N°	Note
1	H.109.0-56	CORPO Ø60 x L.81	BODY	1	
2	H.109.0-51	PISTONE Ø32/Ø16X18	PISTON	1	
3	H.109.0-43	ASTA Ø20X104 PER H.109/TB10	ROD	1	
4	H.109.0-47	SUPPORTO LEVA 60X60X36	LEVER SUPPORT	1	
5	H.109.0-45	FLANGIA INTERMEDIA Ø49.7/17X16	MIDDLE FLANGE	1	
6	H.109.0-48	LEVA Ø12X95	LEVER	1	
7	H.603.0-15	MOLLA	SPRING	1	
8C	C.1707.04X015	SPINA CILINDRICA D4X15 - UNI 6364 A	CIL.PIN	1	
9C	C.1707.05X020	SPINA CILINDRICA D5X20 - UNI 6364 A	CIL.PIN	1	
11C	C.3653.016	ANELLO SEEGER E 16	EXT.CIRCLIP	1	
12C	C.5923.06.A10	VITE S.T.E.I. M6X10 A2	HEX.SOCKET SET SCREW	1	
13C	C.5931.06.A99	VITE T.C.E.I. M6X100 INOX A4	HEX.SOCKET HEAD CAP SCREW	4	
15C	C.DIN906.1/8G	TAPPO 1/8 GAS CONICO Z.B.	HEX.SOCKET PIPE PLUG	1	
16C	C.I580/40-N8	IMPUGNATURA D18X40 FORO D8	CYLINDRICAL FIXED HANDLES	1	
17C	CC.PAP1608P10	BOCCOLA D16XD18X08 P10	BUSHING	1	
18C	CC.PAP2020P10	BOCCOLA D20XD23X20 P10	BUSHING	1	
19C	CG.OR2.01078	GUARNIZ. OR 3043/111	O-RING	1	
20C	CG.OR2.04569	GUARNIZ. OR 3181/133	O-RING	1	
21C	CG.SHT03203903	GUARNIZIONE ASTA D32XD39X3.2	ROD SEAL	1	
22C	CG.TS20254/L	GUARN.ASTA POLIUR. D25XD20X4	ROD SEAL	1	
23C	CG.WRM062087	ANELLO RASCHIATORE D16	WIPER RING	1	

Saracinesche PN10M.M.I. - serie leggera Marina Militare Italiana
Gate valves NP10M.M.I. - light class Italian Navy

Tab.140

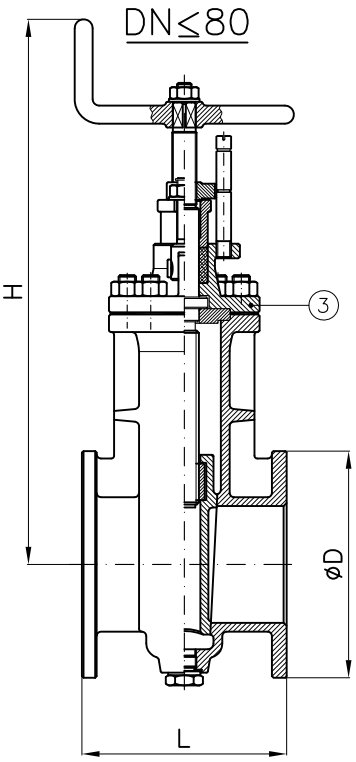

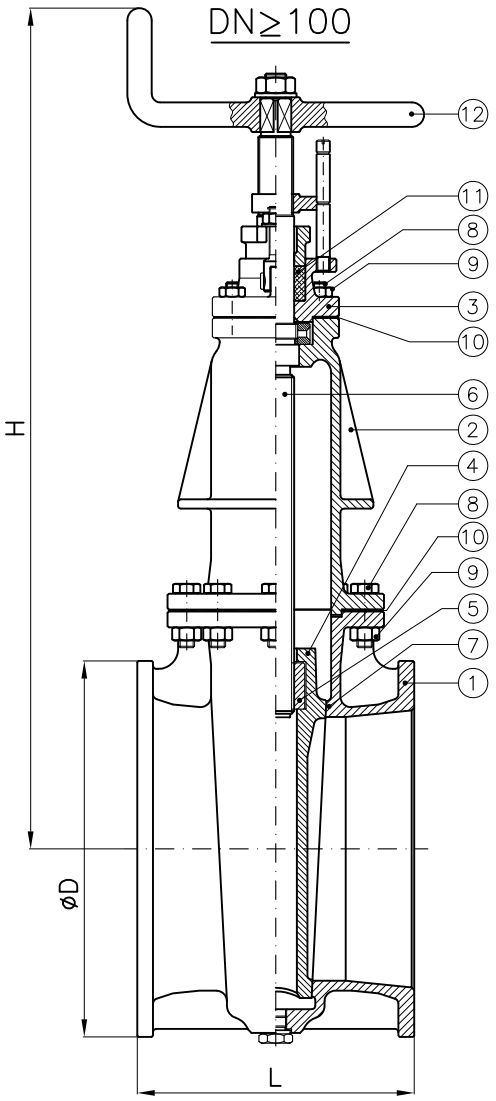

DN	H (~)	L	D	K	f	Holes NO. f	Weight (Kg)
20	230	120	90	65	14	4	4.5
25	230	120	95	70	14	4	5
32	260	115	100	75	14	4	5.5
40	260	115	110	85	14	4	6
50	285	115	120	95	14	4	6.5
60	325	125	135	110	14	6	9
65/70	355	135	140	115	14	6	13
80	375	140	155	130	14	8	14
90	375	140	170	145	14	8	16
100	465	180	175	150	14	8	21
125	515	190	200	175	14	12	35
150	545	200	230	205	14	12	36
175	600	210	270	240	18	12	43
200	665	210	295	265	18	12	60
250	750	220	350	320	18	20	74
300	865	230	385	360	14	24	130
350	960	280	450	410	14	20	175
400	1045	290	505	465	14	24	205
450	1170	300	540	515	14	24	

Flangia quadra
Square flange

DN≤50

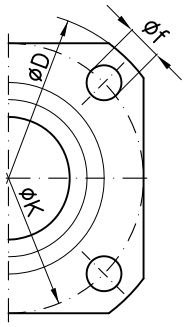

Flangia tonda
Round flange

DN≥60

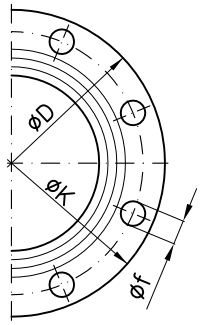

Tab.140 PN10M.M.I.
Bronzo – Bronze UNI 2780 – UNAV 8481
Acciaio – Cast steel UNI 2778 – UNAV 8484

Combinazione materiali standard – Standard materials Combination

ITEM	DENOMINAZIONE DENOMINATION	A/316 MATERIALE MATERIAL	B/316 MATERIALE MATERIAL	B/B MATERIALE MATERIAL	N/316 MATERIALE MATERIAL	N/M MATERIALE MATERIAL
01	Body	Cast steel GP240-GH UNI EN10213	Bronze UNI EN1982 G-CuSn5Zn5Pb5	Bronze UNI EN1982 G-CuSn5Zn5Pb5	Bronze UNI EN1982 G-CuSn10Zn2Ni2	Bronze UNI EN1982 G-CuSn10Zn2Ni2
02	Casing	Cast steel GP240-GH UNI EN10213	Bronze UNI EN1982 G-CuSn5Zn5Pb5	Bronze UNI EN1982 G-CuSn5Zn5Pb5	Bronze UNI EN1982 G-CuSn10Zn2Ni2	Bronze UNI EN1982 G-CuSn10Zn2Ni2
03	Bonnet	Cast steel GP240-GH UNI EN10213	Bronze UNI EN1982 G-CuSn5Zn5Pb5	Bronze UNI EN1982 G-CuSn5Zn5Pb5	Bronze UNI EN1982 G-CuSn10Zn2Ni2	Bronze UNI EN1982 G-CuSn10Zn2Ni2
04	Disc (≤ DN80)	Stainless steel AISI316 UNI EN10088	Bronze UNI EN1982 G-CuSn5Zn5Pb5	Bronze UNI EN1982 G-CuSn5Zn5Pb5	Bronze UNI EN1982 G-CuSn10Zn2Ni2	Bronze UNI EN1982 G-CuSn10Zn2Ni2
04	Disc (≥ DN100)	Cast steel GP240-GH UNI EN10213 plus AISI316 facing welding	Bronze UNI EN1982 G-CuSn5Zn5Pb5	Bronze UNI EN1982 G-CuSn5Zn5Pb5	Bronze UNI EN1982 G-CuSn10Zn2Ni2	Bronze UNI EN1982 G-CuSn10Zn2Ni2
05	Female screw	Bronze UNI EN1982 G-CuSn5Zn5Pb5	Bronze UNI EN1982 G-CuSn5Zn5Pb5	Bronze UNI EN1982 G-CuSn5Zn5Pb5	Bronze UNI EN1982 G-CuSn5Zn5Pb5	Bronze UNI EN1982 G-CuSn5Zn5Pb5
06	Stem	Stainless steel AISI316 UNI EN10088	Stainless steel AISI316 UNI EN10088	Brass CW617N (OT58)	Stainless steel AISI316 UNI EN10088	Monel K500 BS 3076 NA18 (2.4375)
07	Body seat	Stainless steel AISI316 UNI EN10088	Bronze UNI EN1982 G-CuSn5Zn5Pb5	Bronze UNI EN1982 G-CuSn5Zn5Pb5	Bronze UNI EN1982 G-CuSn10Zn2Ni2	Bronze UNI EN1982 G-CuSn10Zn2Ni2
08	Bonnet/Casing stud bolt	Galvanized Steel 8.8 EN20898-1	Galvanized Steel 8.8 EN20898-1	Galvanized Steel 8.8 EN20898-1	Galvanized Steel 8.8 EN20898-1	Galvanized Steel 8.8 EN20898-1
09	Nut	Galvanized Steel 8.8 EN20898-1	Galvanized Steel 8.8 EN20898-1	Galvanized Steel 8.8 EN20898-1	Galvanized Steel 8.8 EN20898-1	Galvanized Steel 8.8 EN20898-1
10	Gasket	Planiflex KG carbo/C PF81	Planiflex KG carbo/C PF81	Planiflex KG carbo/C PF81	Planiflex KG carbo/C PF81	Planiflex KG carbo/C PF81
11	Packing	Carbograph GR8800	Carbograph GR8800	Carbograph GR8800	Carbograph GR8800	Carbograph GR8800
12	Handle	Steel A37 UNI EN10217-1	Steel A37 UNI EN10217-1	Steel A37 UNI EN10217-1	Steel A37 UNI EN10217-1	Steel A37 UNI EN10217-1

Nota: Combinazioni materiali non standard a richiesta
Note: Non standard materials combinations on request

Saracinesche a vite interna PN6 - PN10 - PN16
Gate valves inside screw NP6 - NP10 - NP16

Tab.140
UNI-DIN

Conform to:
UNI EN1092

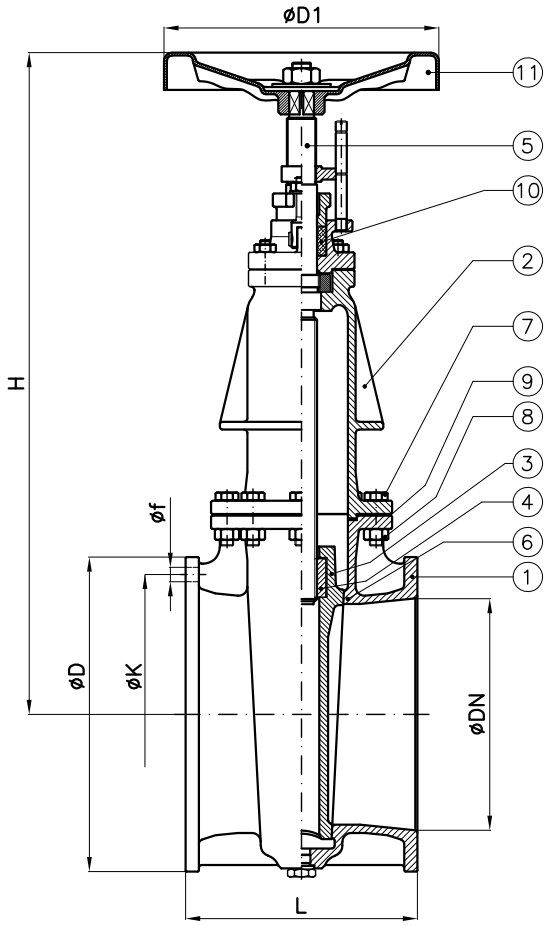

					PN6				PN10				PN16			
DN	H (~)	L	D1	Weight (Kg)	D	K	f	Holes NO. f	D	K	f	Holes NO. f	D	K	f	Holes NO. f
20	220	120	100		90	65	11	4	105	75	14	4	105	75	14	4
25	220	120	100		100	75	11	4	115	85	14	4	115	85	14	4
32	245	120	100		120	90	14	4	140	100	18	4	140	100	18	4
40	255	120	100	10	130	100	14	4	150	110	18	4	150	110	18	4
50	265	150	100	14	140	110	14	4	165	125	18	4	165	125	18	4
65	330	170	150	21	160	130	14	4	185	145	18	4	185	145	18	4
80	340	180	150	25	190	150	18	4	200	160	18	8	200	160	18	8
100	355	190	175	27	210	170	18	4	220	180	18	8	220	180	18	8
125	400	200	200	34	240	200	18	8	250	210	18	8	250	210	18	8
150	435	210	200	42	265	225	18	8	285	240	22	8	285	240	22	8
200	620	230	225	71	320	280	18	8	340	295	22	8	340	295	22	12
250	640	250	250	87	375	335	18	12	395	350	22	12	405	355	26	12
300	860	270	300	155	440	395	22	12	445	400	22	12	460	410	26	12
350	950	290	350	198	490	445	22	12	505	460	22	16	520	470	26	16
400	1060	310	350	235	540	495	22	16	565	515	26	16	580	525	30	16

Combinazione materiali standard – Standard materials Combination					
		B/316	B/B	N/316	N/M
ITEM	DENOMINAZIONE DENOMINATION	MATERIALE MATERIAL	MATERIALE MATERIAL	MATERIALE MATERIAL	MATERIALE MATERIAL
01	Body	Bronze UNI EN1982 G-CuSn5Zn5Pb5	Bronze UNI EN1982 G-CuSn5Zn5Pb5	Bronze UNI EN1982 G-CuSn10Zn2Ni2	Bronze UNI EN1982 G-CuSn10Zn2Ni2
02	Bonnet	Bronze UNI EN1982 G-CuSn5Zn5Pb5	Bronze UNI EN1982 G-CuSn5Zn5Pb5	Bronze UNI EN1982 G-CuSn10Zn2Ni2	Bronze UNI EN1982 G-CuSn10Zn2Ni2
03	Disc (≤ DN80)	Bronze UNI EN1982 G-CuSn5Zn5Pb5	Bronze UNI EN1982 G-CuSn5Zn5Pb5	Bronze UNI EN1982 G-CuSn10Zn2Ni2	Bronze UNI EN1982 G-CuSn10Zn2Ni2
03	Disc (≥ DN100)	Bronze UNI EN1982 G-CuSn5Zn5Pb5	Bronze UNI EN1982 G-CuSn5Zn5Pb5	Bronze UNI EN1982 G-CuSn10Zn2Ni2	Bronze UNI EN1982 G-CuSn10Zn2Ni2
04	Female screw	Bronze UNI EN1982 G-CuSn5Zn5Pb5	Bronze UNI EN1982 G-CuSn5Zn5Pb5	Bronze UNI EN1982 G-CuSn5Zn5Pb5	Bronze UNI EN1982 G-CuSn5Zn5Pb5
05	Stem	Stainless steel AISI316 UNI EN10088	Brass CW617N (OT58)	Stainless steel AISI316 UNI EN10088	Monel K500 BS 3076 NA18 (2.4375)
06	Body seat	Bronze UNI EN1982 G-CuSn5Zn5Pb5	Bronze UNI EN1982 G-CuSn5Zn5Pb5	Bronze UNI EN1982 G-CuSn10Zn2Ni2	Bronze UNI EN1982 G-CuSn10Zn2Ni2
07	Bonnet stud bolt	Galvanized Steel 8.8 EN20898-1	Galvanized Steel 8.8 EN20898-1	Galvanized Steel 8.8 EN20898-1	Galvanized Steel 8.8 EN20898-1
08	Nut	Galvanized Steel 8.8 EN20898-1	Galvanized Steel 8.8 EN20898-1	Galvanized Steel 8.8 EN20898-1	Galvanized Steel 8.8 EN20898-1
09	Gasket	Planiflex KG carbo/C PF81	Planiflex KG carbo/C PF81	Planiflex KG carbo/C PF81	Planiflex KG carbo/C PF81
10	Packing	Carbograph GR8800	Carbograph GR8800	Carbograph GR8800	Carbograph GR8800
11	Handwheel	Steel A37 UNI EN10217-1	Steel A37 UNI EN10217-1	Steel A37 UNI EN10217-1	Steel A37 UNI EN10217-1

Nota: Combinazioni materiali non standard a richiesta
Note: Non standard materials combinations on request

Saracinesche serie pesante PN6 UNAV 8511
Gate valves heavy class NP6 UNAV 8511

Tab.141

RF FLANGES: A/GS
FF FLANGES: B/G

Conform to:
UNI EN1092
DIN3202
NE406111

DN≤80

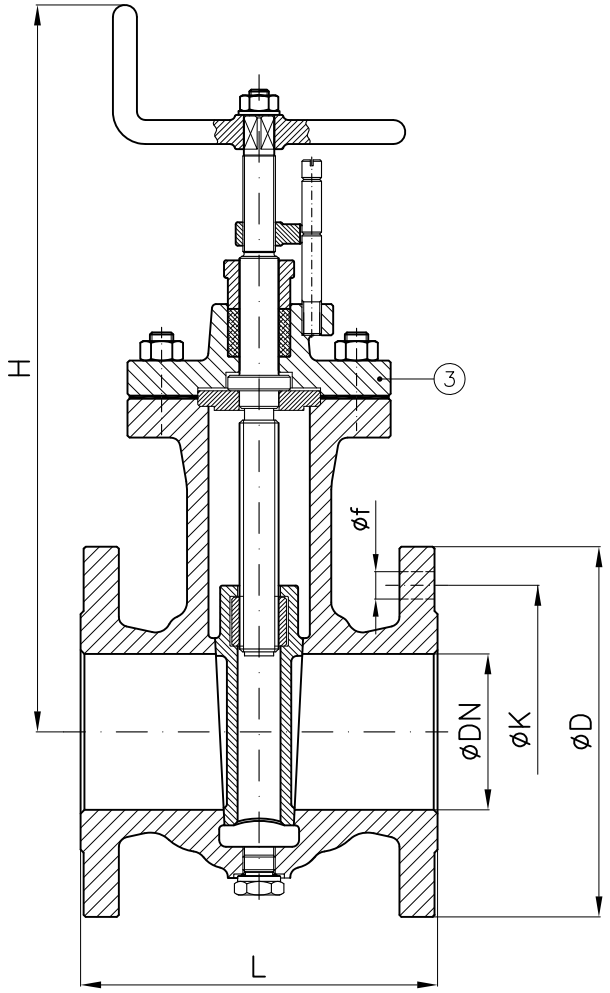

DN≥100

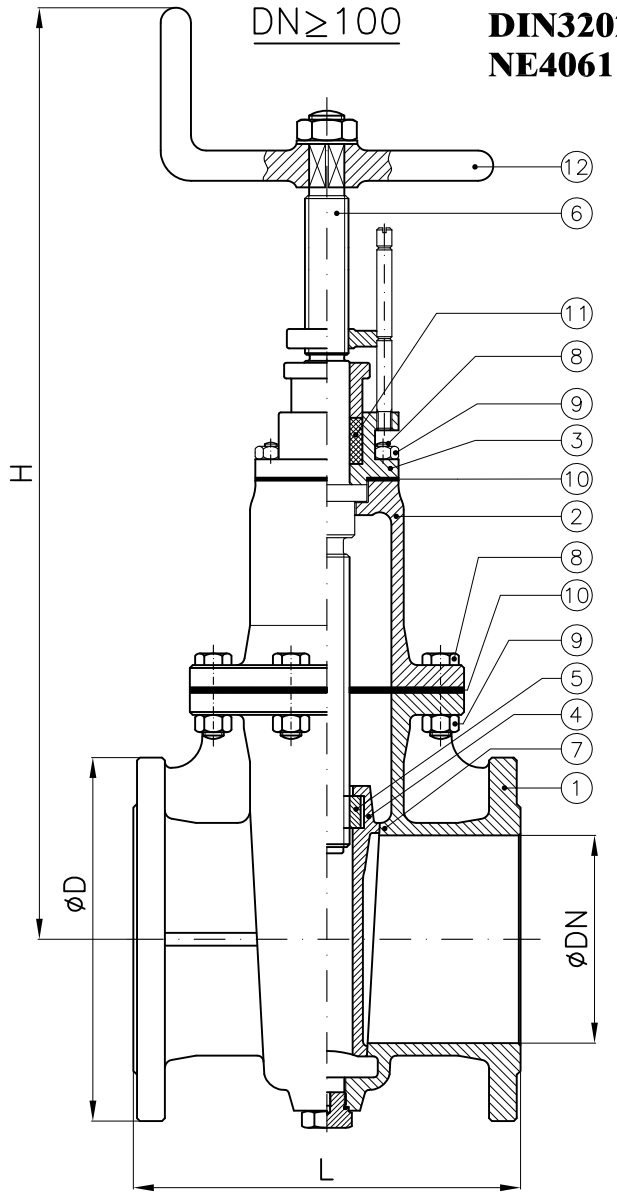

*: Quota "L" per A, G, GS =135mm
Quote "L" for A, G, GS =135mm

Quota "L" per B =125mm
Quote "L" for B =125mm

DN	H (~)	L	D	K	f	Holes NO. f	Weight (Kg)
40	280	135*	130	100	14	4	12
50	280	150	140	110	14	4	13
65	355	170	160	130	14	4	21
80	375	180	190	150	18	4	25
100	480	225	210	170	18	4	43
125	520	250	240	200	18	8	58
150	560	250	265	225	18	8	63
175	620	275	295	255	18	8	92
200	665	300	320	280	18	8	104
250	770	320	375	335	18	12	156
300	885	350	440	395	22	12	212
350	990	380	490	445	22	12	288
400	1075	390	540	495	22	16	330
450	1200	420	595	550	22	16	450
500	1340	460	645	600	22	20	500
600	1570	495	755	705	26	20	800

Combinazione materiali standard – Standard materials Combination					
		A/316	CF8M/316	B/316	B/B
ITEM	DENOMINAZIONE DENOMINATION	MATERIALE MATERIAL	MATERIALE MATERIAL	MATERIALE MATERIAL	MATERIALE MATERIAL
01	Body	Cast steel GP240-GH UNI EN10213	Stainless steel CF8M ASTM A351	Bronze UNI EN1982 G-CuSn5Zn5Pb5	Bronze UNI EN1982 G-CuSn5Zn5Pb5
02	Casing	Cast steel GP240-GH UNI EN10213	Stainless steel CF8M ASTM A351	Bronze UNI EN1982 G-CuSn5Zn5Pb5	Bronze UNI EN1982 G-CuSn5Zn5Pb5
03	Bonnet	Cast steel GP240-GH UNI EN10213	Stainless steel CF8M ASTM A351	Bronze UNI EN1982 G-CuSn5Zn5Pb5	Bronze UNI EN1982 G-CuSn5Zn5Pb5
04	Disc (≤ DN80)	Stainless steel AISI316 UNI EN10088	Stainless steel AISI316 UNI EN10088	Bronze UNI EN1982 G-CuSn5Zn5Pb5	Bronze UNI EN1982 G-CuSn5Zn5Pb5
04	Disc (≥ DN100)	Cast steel GP240-GH UNI EN10213 plus AISI316 facing welding	Stainless steel CF8M ASTM A351	Bronze UNI EN1982 G-CuSn5Zn5Pb5	Bronze UNI EN1982 G-CuSn5Zn5Pb5
05	Female screw	Bronze UNI EN1982 G-CuSn5Zn5Pb5	Bronze UNI EN1982 G-CuSn5Zn5Pb5	Bronze UNI EN1982 G-CuSn5Zn5Pb5	Bronze UNI EN1982 G-CuSn5Zn5Pb5
06	Stem	Stainless steel AISI316 UNI EN10088	Stainless steel AISI316 UNI EN10088	Stainless steel AISI316 UNI EN10088	Brass CW617N (OT58)
07	Body seat	Stainless steel AISI316 UNI EN10088	Stainless steel AISI316 UNI EN10088	Bronze UNI EN1982 G-CuSn5Zn5Pb5	Bronze UNI EN1982 G-CuSn5Zn5Pb5
08	Bonnet/Casing stud bolt	Galvanized Steel 8.8 EN20898-1	Stainless steel B8M	Galvanized Steel 8.8 EN20898-1	Galvanized Steel 8.8 EN20898-1
09	Nut	Galvanized Steel 8.8 EN20898-1	Stainless steel Gr.8M	Galvanized Steel 8.8 EN20898-1	Galvanized Steel 8.8 EN20898-1
10	Gasket	Planiflex KG carbo/C PF81	Planiflex KG carbo/C PF81	Planiflex KG carbo/C PF81	Planiflex KG carbo/C PF81
11	Packing	Carbograph GR8800	Carbograph GR8800	Carbograph GR8800	Carbograph GR8800
12	Handle	Steel A37 UNI EN10217-1	Steel A37 UNI EN10217-1	Steel A37 UNI EN10217-1	Steel A37 UNI EN10217-1
Nota: Combinazioni materiali non standard a richiesta Note: Non standard materials combinations on request					

Combinazione materiali standard – Standard materials Combination				
		G/316	G/B	GS/316
ITEM	DENOMINAZIONE DENOMINATION	MATERIALE MATERIAL	MATERIALE MATERIAL	MATERIALE MATERIAL
01	Body	Cast iron UNI EN1561 EN-GJL-250	Cast iron UNI EN1561 EN-GJL-250	Nodular cast iron EN-GJS-400-15U UNI EN1563
02	Casing	Cast iron UNI EN1561 EN-GJL-250	Cast iron UNI EN1561 EN-GJL-250	Nodular cast iron EN-GJS-400-15U UNI EN1563
03	Bonnet	Cast iron UNI EN1561 EN-GJL-250	Cast iron UNI EN1561 EN-GJL-250	Nodular cast iron EN-GJS-400-15U UNI EN1563
04	Disc (≤ DN80)	Stainless steel AISI316 UNI EN10088	Bronze UNI EN1982 G-CuSn5Zn5Pb5	Stainless steel AISI316 UNI EN10088
04	Disc (≥ DN100)	Cast steel GP240-GH UNI EN10213 plus AISI316 facing welding	Bronze UNI EN1982 G-CuSn5Zn5Pb5	Cast steel GP240-GH UNI EN10213 plus AISI316 facing welding
05	Female screw	Bronze UNI EN1982 G-CuSn5Zn5Pb5	Bronze UNI EN1982 G-CuSn5Zn5Pb5	Bronze UNI EN1982 G-CuSn5Zn5Pb5
06	Stem	Stainless steel AISI316 UNI EN10088	Brass CW617N (OT58)	Stainless steel AISI316 UNI EN10088
07	Body seat	Stainless steel AISI316 UNI EN10088	Bronze UNI EN1982 G-CuSn5Zn5Pb5	Stainless steel AISI316 UNI EN10088
08	Bonnet/Casing stud bolt	Galvanized Steel 8.8 EN20898-1	Galvanized Steel 8.8 EN20898-1	Galvanized Steel 8.8 EN20898-1
09	Nut	Galvanized Steel 8.8 EN20898-1	Galvanized Steel 8.8 EN20898-1	Galvanized Steel 8.8 EN20898-1
10	Gasket	Planiflex KG carbo/C PF81	Planiflex KG carbo/C PF81	Planiflex KG carbo/C PF81
11	Packing	Carbograph GR8800	Carbograph GR8800	Carbograph GR8800
12	Handle	Steel A37 UNI EN10217-1	Steel A37 UNI EN10217-1	Steel A37 UNI EN10217-1
Nota: Combinazioni materiali non standard a richiesta Note: Non standard materials combinations on request				

Saracinesche serie pesante PN16 UNAV 9851

Gate valves heavy class NP16 UNAV 9851

Tab.142

RF FLANGES: A/GS

FF FLANGES: B/G

Conform to:
UNI EN1092
DIN3202
NE406112

DN≤80

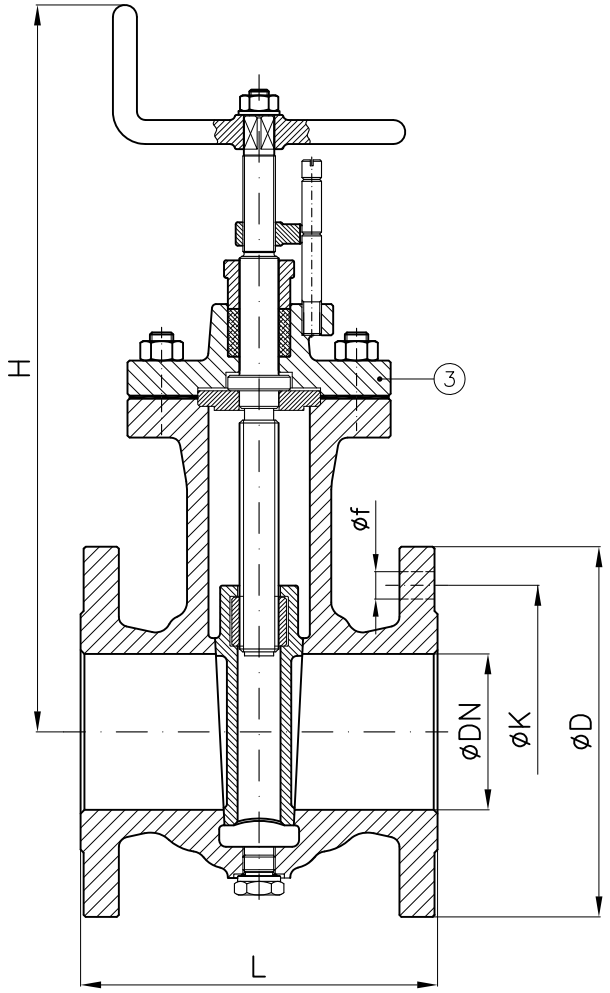

DN≥100

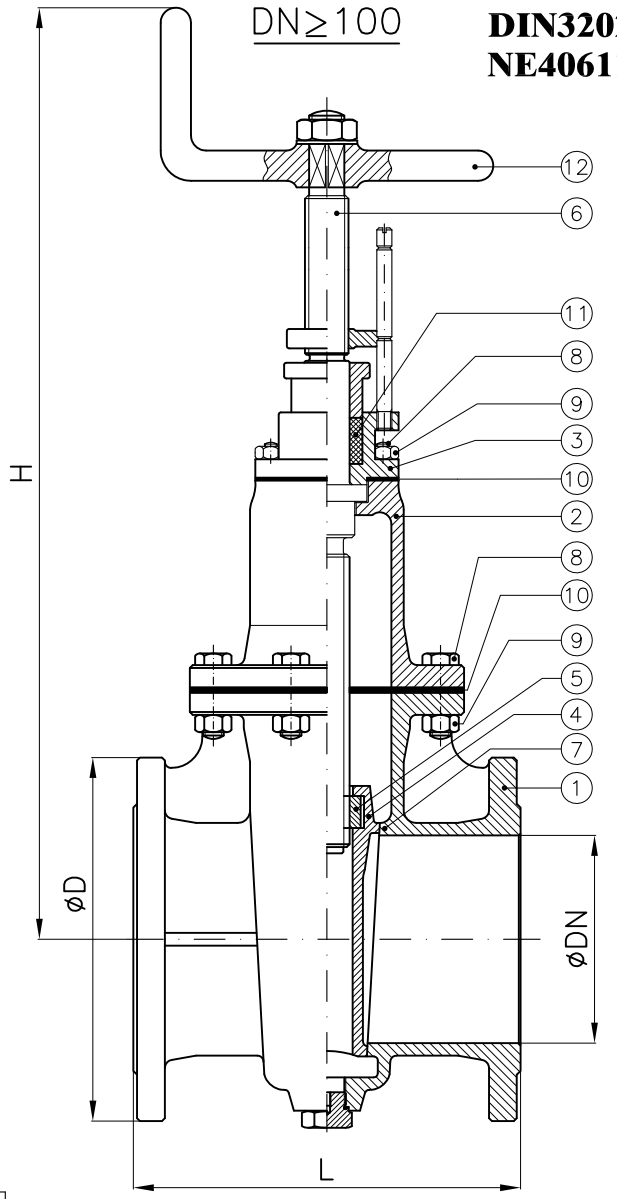

*: Quota "L" per A, G, GS =135mm
Quote "L" for A, G, GS =135mm

Quota "L" per B =125mm
Quote "L" for B =125mm

DN	H (~)	L	D	K	f	Holes NO. f	Weight (Kg)
40	280	135*	150	110	18	4	13
50	280	155	165	125	18	4	14
65	355	175	185	145	18	4	24
80	375	185	200	160	18	8	25
100	480	235	220	180	18	8	47
125	520	260	250	210	18	8	64
150	560	270	285	240	22	8	76
175	620	300	315	270	22	8	98
200	665	310	340	295	22	12	115
250	770	330	405	355	26	12	162
300	885	360	460	410	26	12	261
350	990	400	520	470	26	16	296
400	1075	400	580	525	30	16	366
450	1200	450	640	585	30	20	460
500	1300	460	715	650	33	20	550
600	1600	495	840	770	36	20	890

Combinazione materiali standard – Standard materials Combination					
		A/316	CF8M/316	B/316	B/B
ITEM	DENOMINAZIONE DENOMINATION	MATERIALE MATERIAL	MATERIALE MATERIAL	MATERIALE MATERIAL	MATERIALE MATERIAL
01	Body	Cast steel GP240-GH UNI EN10213	Stainless steel CF8M ASTM A351	Bronze UNI EN1982 G-CuSn5Zn5Pb5	Bronze UNI EN1982 G-CuSn5Zn5Pb5
02	Casing	Cast steel GP240-GH UNI EN10213	Stainless steel CF8M ASTM A351	Bronze UNI EN1982 G-CuSn5Zn5Pb5	Bronze UNI EN1982 G-CuSn5Zn5Pb5
03	Bonnet	Cast steel GP240-GH UNI EN10213	Stainless steel CF8M ASTM A351	Bronze UNI EN1982 G-CuSn5Zn5Pb5	Bronze UNI EN1982 G-CuSn5Zn5Pb5
04	Disc (≤ DN80)	Stainless steel AISI316 UNI EN10088	Stainless steel AISI316 UNI EN10088	Bronze UNI EN1982 G-CuSn5Zn5Pb5	Bronze UNI EN1982 G-CuSn5Zn5Pb5
04	Disc (≥ DN100)	Cast steel GP240-GH UNI EN10213 plus AISI316 facing welding	Stainless steel CF8M ASTM A351	Bronze UNI EN1982 G-CuSn5Zn5Pb5	Bronze UNI EN1982 G-CuSn5Zn5Pb5
05	Female screw	Bronze UNI EN1982 G-CuSn5Zn5Pb5	Bronze UNI EN1982 G-CuSn5Zn5Pb5	Bronze UNI EN1982 G-CuSn5Zn5Pb5	Bronze UNI EN1982 G-CuSn5Zn5Pb5
06	Stem	Stainless steel AISI316 UNI EN10088	Stainless steel AISI316 UNI EN10088	Stainless steel AISI316 UNI EN10088	Brass CW617N (OT58)
07	Body seat	Stainless steel AISI316 UNI EN10088	Stainless steel AISI316 UNI EN10088	Bronze UNI EN1982 G-CuSn5Zn5Pb5	Bronze UNI EN1982 G-CuSn5Zn5Pb5
08	Bonnet/Casing stud bolt	Galvanized Steel 8.8 EN20898-1	Stainless steel B8M	Galvanized Steel 8.8 EN20898-1	Galvanized Steel 8.8 EN20898-1
09	Nut	Galvanized Steel 8.8 EN20898-1	Stainless steel Gr.8M	Galvanized Steel 8.8 EN20898-1	Galvanized Steel 8.8 EN20898-1
10	Gasket	Planiflex KG carbo/C PF81	Planiflex KG carbo/C PF81	Planiflex KG carbo/C PF81	Planiflex KG carbo/C PF81
11	Packing	Carbograph GR8800	Carbograph GR8800	Carbograph GR8800	Carbograph GR8800
12	Handle	Steel A37 UNI EN10217-1	Steel A37 UNI EN10217-1	Steel A37 UNI EN10217-1	Steel A37 UNI EN10217-1
Nota: Combinazioni materiali non standard a richiesta Note: Non standard materials combinations on request					

Combinazione materiali standard – Standard materials Combination				
		G/316	G/B	GS/316
ITEM	DENOMINAZIONE DENOMINATION	MATERIALE MATERIAL	MATERIALE MATERIAL	MATERIALE MATERIAL
01	Body	Cast iron UNI EN1561 EN-GJL-250	Cast iron UNI EN1561 EN-GJL-250	Nodular cast iron EN-GJS-400-15U UNI EN1563
02	Casing	Cast iron UNI EN1561 EN-GJL-250	Cast iron UNI EN1561 EN-GJL-250	Nodular cast iron EN-GJS-400-15U UNI EN1563
03	Bonnet	Cast iron UNI EN1561 EN-GJL-250	Cast iron UNI EN1561 EN-GJL-250	Nodular cast iron EN-GJS-400-15U UNI EN1563
04	Disc (≤ DN80)	Stainless steel AISI316 UNI EN10088	Bronze UNI EN1982 G-CuSn5Zn5Pb5	Stainless steel AISI316 UNI EN10088
04	Disc (≥ DN100)	Cast steel GP240-GH UNI EN10213 plus AISI316 facing welding	Bronze UNI EN1982 G-CuSn5Zn5Pb5	Cast steel GP240-GH UNI EN10213 plus AISI316 facing welding
05	Female screw	Bronze UNI EN1982 G-CuSn5Zn5Pb5	Bronze UNI EN1982 G-CuSn5Zn5Pb5	Bronze UNI EN1982 G-CuSn5Zn5Pb5
06	Stem	Stainless steel AISI316 UNI EN10088	Brass CW617N (OT58)	Stainless steel AISI316 UNI EN10088
07	Body seat	Stainless steel AISI316 UNI EN10088	Bronze UNI EN1982 G-CuSn5Zn5Pb5	Stainless steel AISI316 UNI EN10088
08	Bonnet/Casing stud bolt	Galvanized Steel 8.8 EN20898-1	Galvanized Steel 8.8 EN20898-1	Galvanized Steel 8.8 EN20898-1
09	Nut	Galvanized Steel 8.8 EN20898-1	Galvanized Steel 8.8 EN20898-1	Galvanized Steel 8.8 EN20898-1
10	Gasket	Planiflex KG carbo/C PF81	Planiflex KG carbo/C PF81	Planiflex KG carbo/C PF81
11	Packing	Carbograph GR8800	Carbograph GR8800	Carbograph GR8800
12	Handle	Steel A37 UNI EN10217-1	Steel A37 UNI EN10217-1	Steel A37 UNI EN10217-1
Nota: Combinazioni materiali non standard a richiesta Note: Non standard materials combinations on request				

Saracinesche serie pesante PN16 UNAV 9661
Gate valves heavy class NP16 UNAV 9661

Tab.143

Conform to:
UNI EN1092

RF FLANGES: GS

FF FLANGES: B

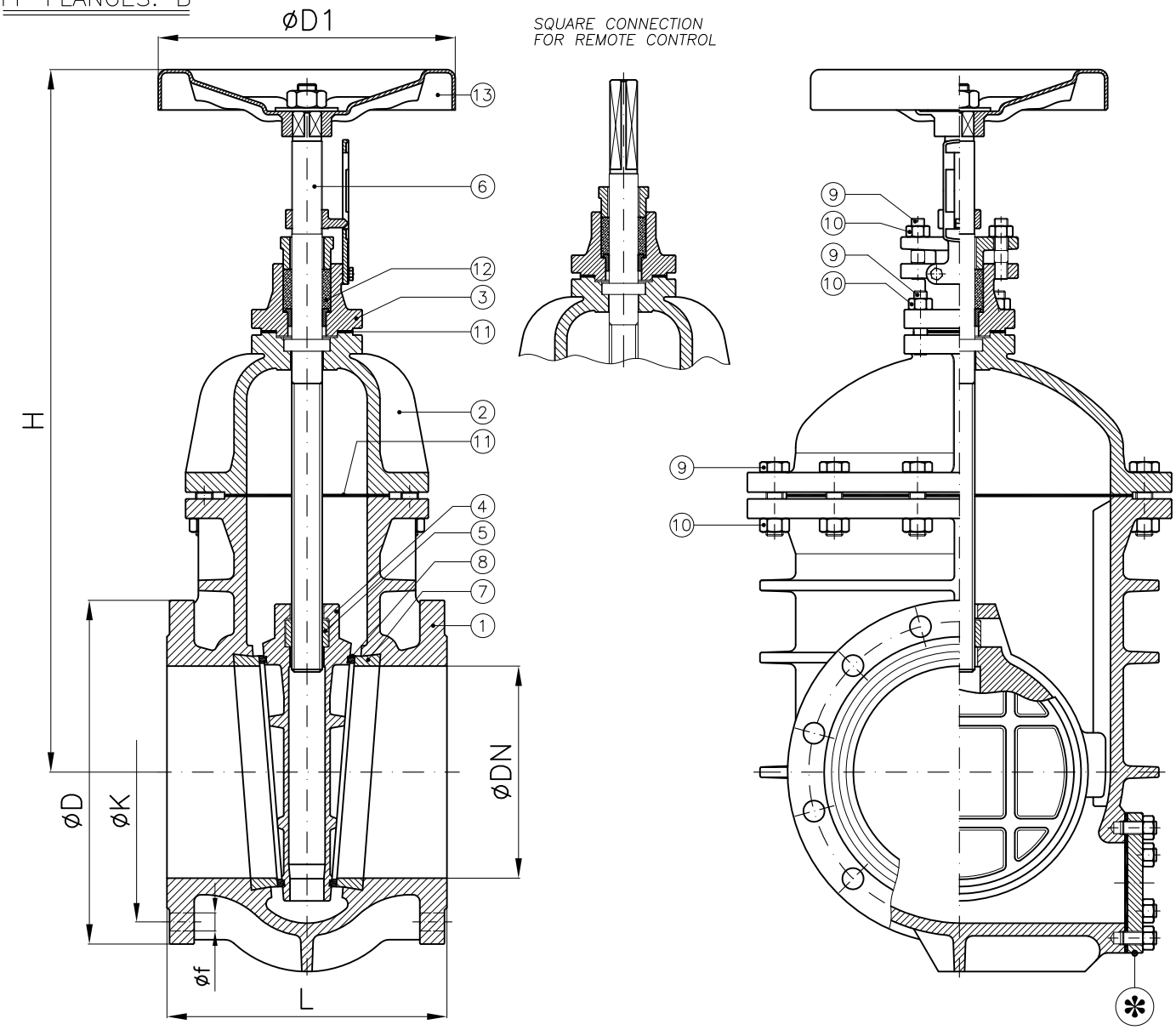

✻ : Portello di ispezione solo per DN≥150

✻ : *Inspection door only ND≥150*

DN	D1	H (~)	L	D	K	f	Holes NO. f	Weight (Kg)
65	200	425	190	185	145	18	4	30
80	200	430	205	200	160	18	8	39
100	225	455	230	220	180	18	8	54
125	250	530	255	250	210	18	8	74
150	250	570	265	285	240	22	8	92
175	300	645	280	315	270	22	8	128
200	300	690	290	340	295	22	12	140
250	350	805	330	405	355	26	12	176
300	400	905	355	460	410	26	12	262
350	500	1050	380	520	470	26	16	366
400	575	1140	405	580	525	30	16	508
450	650	1250	430	640	585	30	20	680
500	720	1405	460	715	650	33	20	920
600	720	1600	510	840	770	36	20	1500
700		1800	600	910	840	36	24	2000

Combinazione materiali standard – Standard materials Combination					
		B/316	B/B	GS/316	GS/B
ITEM	DENOMINAZIONE DENOMINATION	MATERIALE MATERIAL	MATERIALE MATERIAL	MATERIALE MATERIAL	MATERIALE MATERIAL
01	Body	Bronze UNI EN1982 G-CuSn5Zn5Pb5	Bronze UNI EN1982 G-CuSn5Zn5Pb5	Nodular cast iron EN-GJS-400-15U UNI EN1563	Nodular cast iron EN-GJS-400-15U UNI EN1563
02	Casing	Bronze UNI EN1982 G-CuSn5Zn5Pb5	Bronze UNI EN1982 G-CuSn5Zn5Pb5	Nodular cast iron EN-GJS-400-15U UNI EN1563	Nodular cast iron EN-GJS-400-15U UNI EN1563
03	Bonnet	Bronze UNI EN1982 G-CuSn5Zn5Pb5	Bronze UNI EN1982 G-CuSn5Zn5Pb5	Nodular cast iron EN-GJS-400-15U UNI EN1563	Nodular cast iron EN-GJS-400-15U UNI EN1563
04	Disc (≤ DN80)	Bronze UNI EN1982 G-CuSn5Zn5Pb5	Bronze UNI EN1982 G-CuSn5Zn5Pb5	Stainless steel AISI316 UNI EN10088	Bronze UNI EN1982 G-CuSn5Zn5Pb5
04	Disc (≥ DN100)	Bronze UNI EN1982 G-CuSn5Zn5Pb5	Bronze UNI EN1982 G-CuSn5Zn5Pb5	Nodular cast iron EN-GJS-400-15U UNI EN1563	Nodular cast iron EN-GJS-400-15U UNI EN1563
05	Female screw	Bronze UNI EN1982 G-CuSn5Zn5Pb5	Bronze UNI EN1982 G-CuSn5Zn5Pb5	Bronze UNI EN1982 G-CuSn5Zn5Pb5	Bronze UNI EN1982 G-CuSn5Zn5Pb5
06	Stem	Stainless steel AISI316 UNI EN10088	Brass CW617N (OT58)	Stainless steel AISI316 UNI EN10088	Brass CW617N (OT58)
07	Body seat	Bronze UNI EN1982 G-CuSn5Zn5Pb5	Brass CW509L (OT60)	Stainless steel AISI316 UNI EN10088	Bronze UNI EN1982 G-CuSn5Zn5Pb5
08	Disc seat	Bronze UNI EN1982 G-CuSn5Zn5Pb5	Bronze UNI EN1982 G-CuSn5Zn5Pb5	Stainless steel AISI316 UNI EN10088	Bronze UNI EN1982 G-CuSn5Zn5Pb5
09	Bonnet/Casing stud bolt	Galvanized Steel 8.8 EN20898-1	Galvanized Steel 8.8 EN20898-1	Galvanized Steel 8.8 EN20898-1	Galvanized Steel 8.8 EN20898-1
10	Nut	Galvanized Steel 8.8 EN20898-1	Galvanized Steel 8.8 EN20898-1	Galvanized Steel 8.8 EN20898-1	Galvanized Steel 8.8 EN20898-1
11	Gasket	Planiflex KG carbo/C PF81	Planiflex KG carbo/C PF81	Planiflex KG carbo/C PF81	Planiflex KG carbo/C PF81
12	Packing	Carbograph GR8800	Carbograph GR8800	Carbograph GR8800	Carbograph GR8800
13	Handwheel	Sheet of carbon steel	Sheet of carbon steel	Sheet of carbon steel	Sheet of carbon steel

Nota: Combinazioni materiali non standard a richiesta
Note: Non standard materials combinations on request

Saracinesche a corpo piatto PN6-10 UNI/DIN
Flat body gate valves NP6-10 UNI/DIN

Tab.145

Conform to:
UNI EN1092

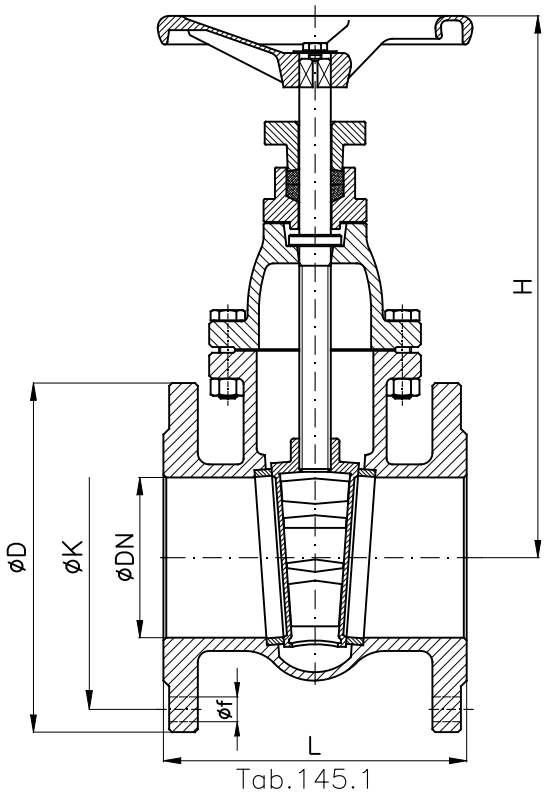

Tab.145.1
Vite interna/inside screw

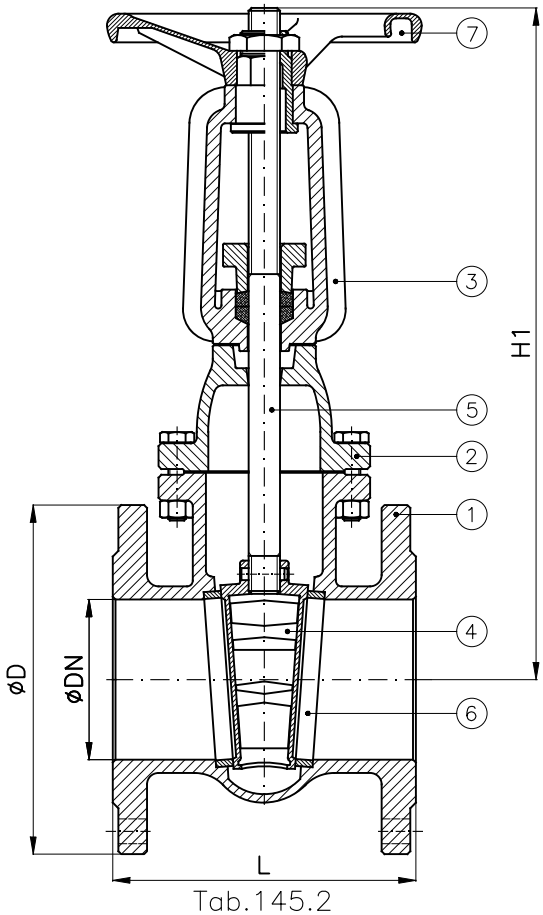

Tab.145.2
Vite esterna/outside screw

				Tab.145.1	Tab.145.2	PN6 – NP6				PN10 – NP10			
DN	L	H	H1	Weight (Kg)	Weight (Kg)	D	K	f	Holes NO. f	D	K	f	Holes NO. f
40	140	230	265	9	10	130	100	14	4	150	110	18	4
50	150	245	275	11	12	140	110	14	4	165	125	18	4
65	170	290	335	15	17	160	130	14	4	185	145	18	4
80	180	315	355	18	22	190	150	18	4	200	160	18	8
100	190	355	400	22	27	210	170	18	4	220	180	18	8
125	200	415	495	31	33	240	200	18	8	250	210	18	8
150	210	460	585	40	43	265	225	18	8	285	240	22	8
175	220	510	660	51	55	295	255	18	8	315	270	22	8
200	230	545	700	60	65	320	280	18	8	340	295	22	8
250	250	635	830	85	100	375	335	18	12	395	350	22	12
300	270	725	960	135	142	440	395	22	12	445	400	22	12

Combinazione materiali standard – Standard materials Combination			
		G/420	G/O
ITEM	DENOMINAZIONE DENOMINATION	MATERIALE MATERIAL	MATERIALE MATERIAL
01	Body	Cast iron UNI EN1561 EN-GJL-250	Cast iron UNI EN1561 EN-GJL-250
02	Casing	Cast iron UNI EN1561 EN-GJL-250	Cast iron UNI EN1561 EN-GJL-250
03	Bonnet	Cast iron UNI EN1561 EN-GJL-250	Cast iron UNI EN1561 EN-GJL-250
04	Disc	Cast iron UNI EN1561 EN-GJL-250	Cast iron UNI EN1561 EN-GJL-250
05	Stem	Stainless steel AISI420 UNI EN10088	Brass CW617N (OT58)
06	body seat	Stainless steel AISI420 UNI EN10088	Brass CW509L (OT60)
07	Handwheel	Sheet of carbon steel	Sheet of carbon steel

Nota: Combinazioni materiali non standard a richiesta
Note: Non standard materials combinations on request

Saracinesche a corpo ovale PN16
Oval body gate valves NP16

Tab.146

Conform to:
UNI EN1092

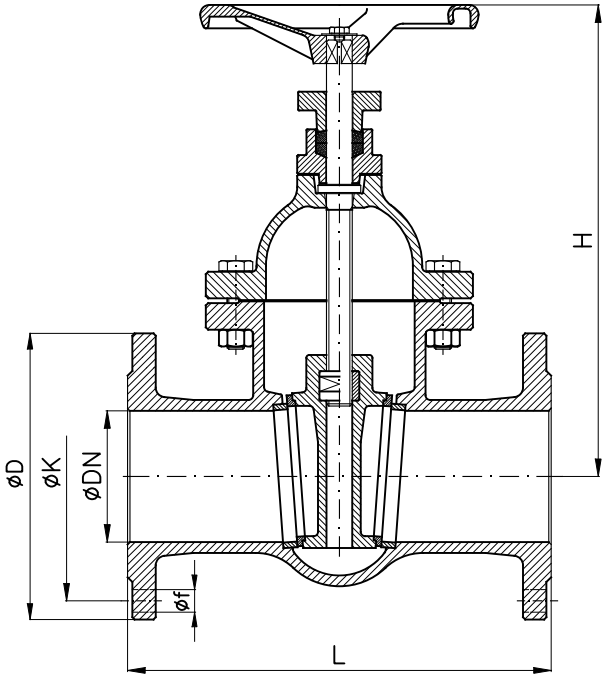

Tab.146.1
Vite interna/inside screw

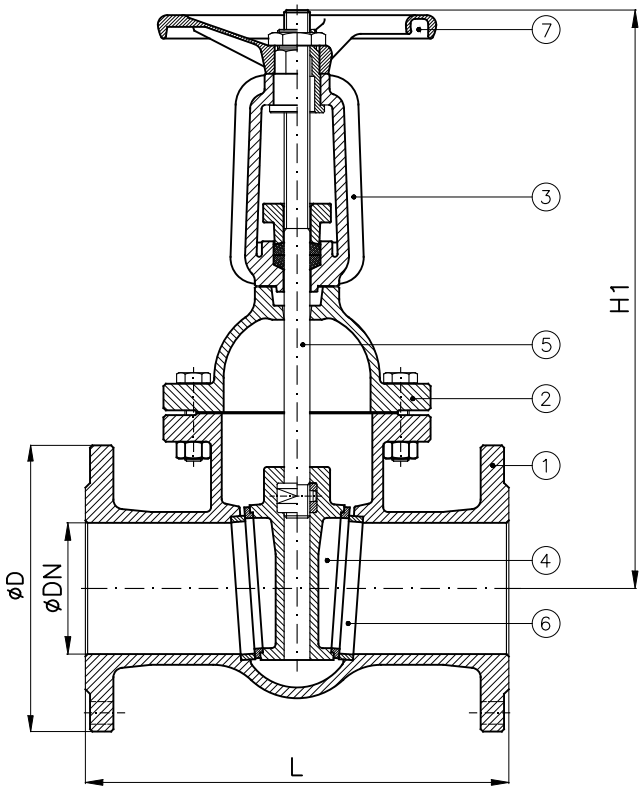

Tab.146.2
Vite esterna/outside screw

				Tab.146.1	Tab.146.2				
DN	L	H	H1	Weight (Kg)	Weight (Kg)	D	K	f	Holes NO. f
40	240	230	265	10	13	150	110	18	4
50	250	265	275	13	16	165	125	18	4
65	270	300	335	17	20	185	145	18	4
80	280	340	380	24	28	200	160	18	8
100	300	370	435	31	35	220	180	18	8
125	325	415	495	41	47	250	210	18	8
150	350	460	585	55	60	285	240	22	8
200	400	555	710	89	95	340	295	22	12
250	450	665	830	140	140	405	355	26	12
300	500	730	965	180	195	460	410	26	12

Combinazione materiali standard – Standard materials Combination			
		G/420	G/O
ITEM	DENOMINAZIONE DENOMINATION	MATERIALE MATERIAL	MATERIALE MATERIAL
01	Body	Cast iron UNI EN1561 EN-GJL-250	Cast iron UNI EN1561 EN-GJL-250
02	Casing	Cast iron UNI EN1561 EN-GJL-250	Cast iron UNI EN1561 EN-GJL-250
03	Bonnet	Cast iron UNI EN1561 EN-GJL-250	Cast iron UNI EN1561 EN-GJL-250
04	Disc	Cast iron UNI EN1561 EN-GJL-250	Cast iron UNI EN1561 EN-GJL-250
05	Stem	Stainless steel AISI420 UNI EN10088	Brass CW617N (OT58)
06	body seat	Stainless steel AISI420 UNI EN10088	Brass CW509L (OT60)
07	Handwheel	Sheet of carbon steel	Sheet of carbon steel
Nota: Combinazioni materiali non standard a richiesta Note: Non standard materials combinations on request			

Saracinesche in ghisa sferoidale cuneo gommato PN16
Soft sealing GGG40 nodular cast iron gate valves NP16

Tab.146/1

Conform to:
UNI EN1092
DIN3202

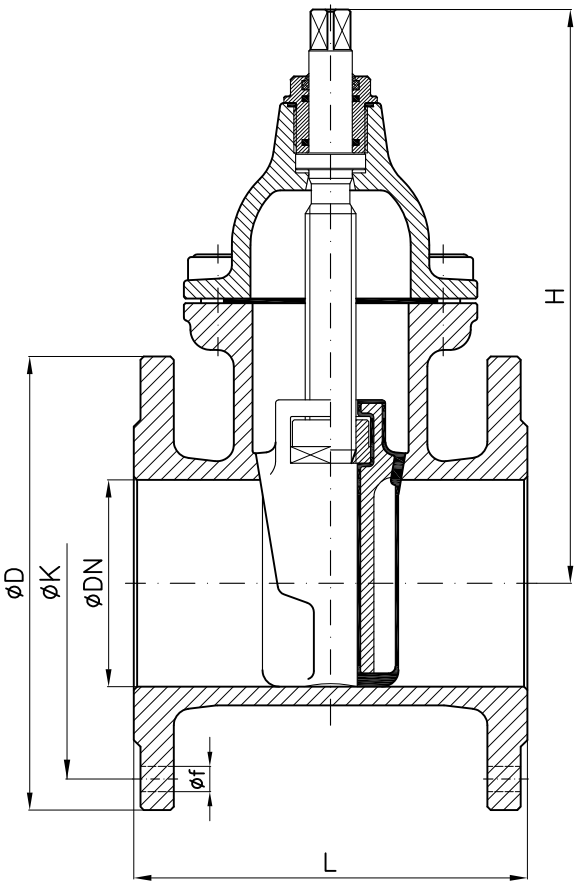

Tab.146/1.1

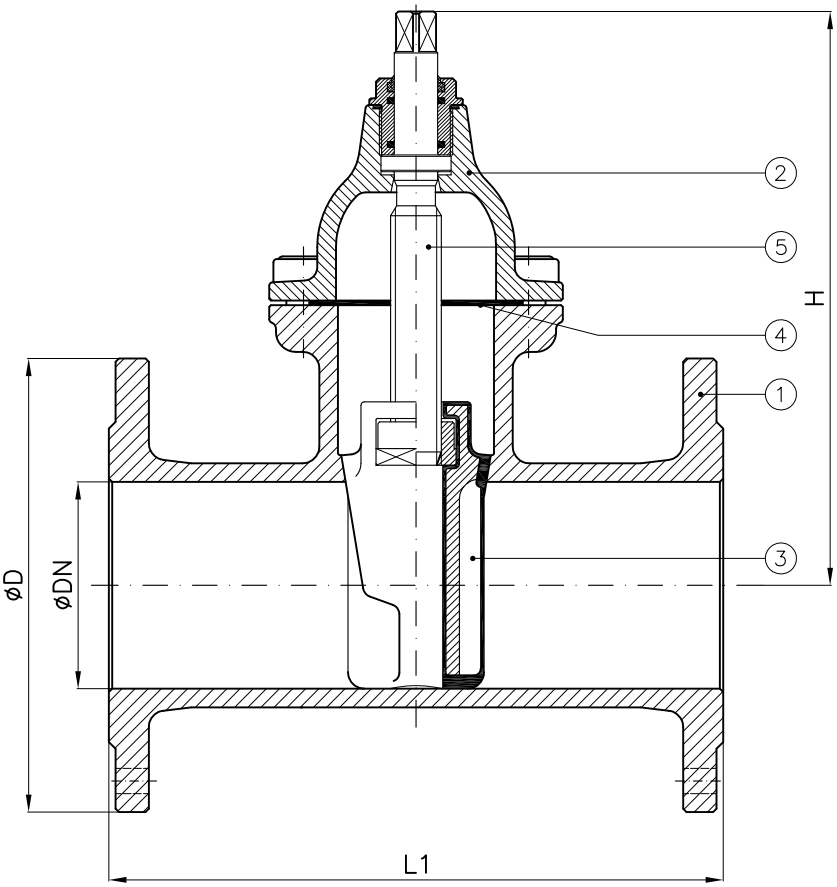

Tab.146/1.2

DN	H	L	Tab146/1.1 Weight (Kg)	L1	Tab146/1.2 Weight (Kg)	D	K	f	Holes NO. f
40	195	140	10	240	11	150	110	18	4
50	205	150	11	250	12	165	125	18	4
65	230	170	14	270	15	185	145	18	4
80	260	180	17	280	18	200	160	18	8
100	290	190	21	300	23	220	180	18	8
125	345	200	29	325	33	250	210	18	8
150	385	210	35	350	40	285	240	22	8
200	475	230	53	400	60	340	295	22	12
250	565	250	78	450	92	405	355	26	12
300	645	270	102	500	123	460	410	26	12

Combinazione materiali standard Standard materials Combination		
		GS
ITEM	DENOMINAZIONE DENOMINATION	MATERIALE MATERIAL
01	Body	Nodular cast iron EN-GJS-400-15U UNI EN1563
02	Bonnet	Nodular cast iron EN-GJS-400-15U UNI EN1563
03	Disc	Nodular cast iron EN-GJS-400-15U UNI EN1563 + Vulkanized NBR
04	Gasket	Asbestos free
05	Stem	Stainless steel AISI420 UNI EN10088

RF FLANGES: A/GS
FF FLANGES: B/G

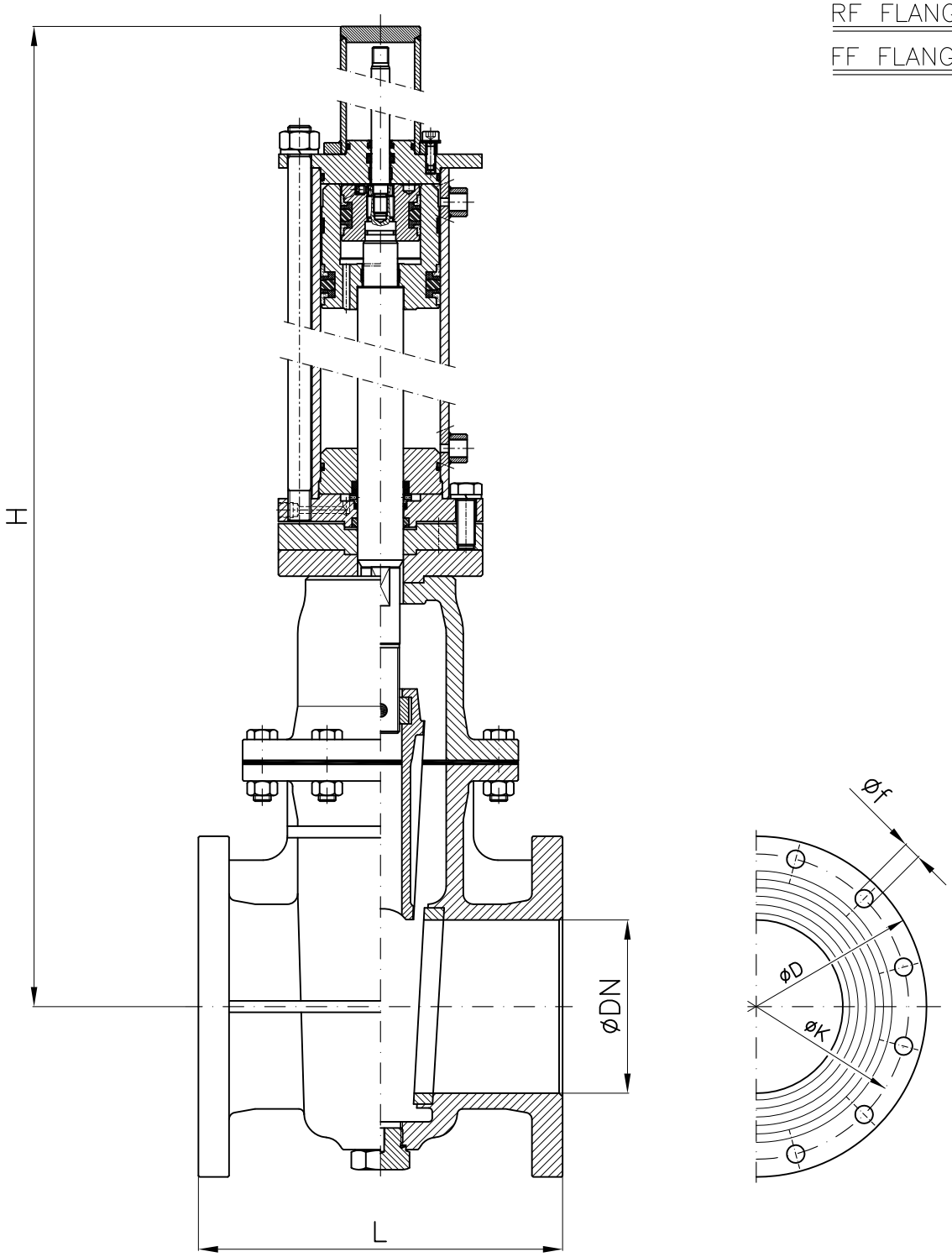

NOTE

Per tipologia prodotto e combinazione materiali, fare riferimento alle Tab.140–140UNI/DIN–141–142–143.
Il dimensionamento dell'attuatore è in funzione di:

- pressione di esercizio della valvola
- pressione olio (min–max)
- servizio

NOTE

By product type and materials combination, refer to Tab.140–140UNI/DIN–141–142–143.
The sizing of the actuator is based on:

- *valve's working pressure*
- *oil's pressure (min–max)*
- *service*

Saracinesche in bronzo con chiusura rapida classe PN10
Bronze gate valves with quick closing lever class NP10

Art.27

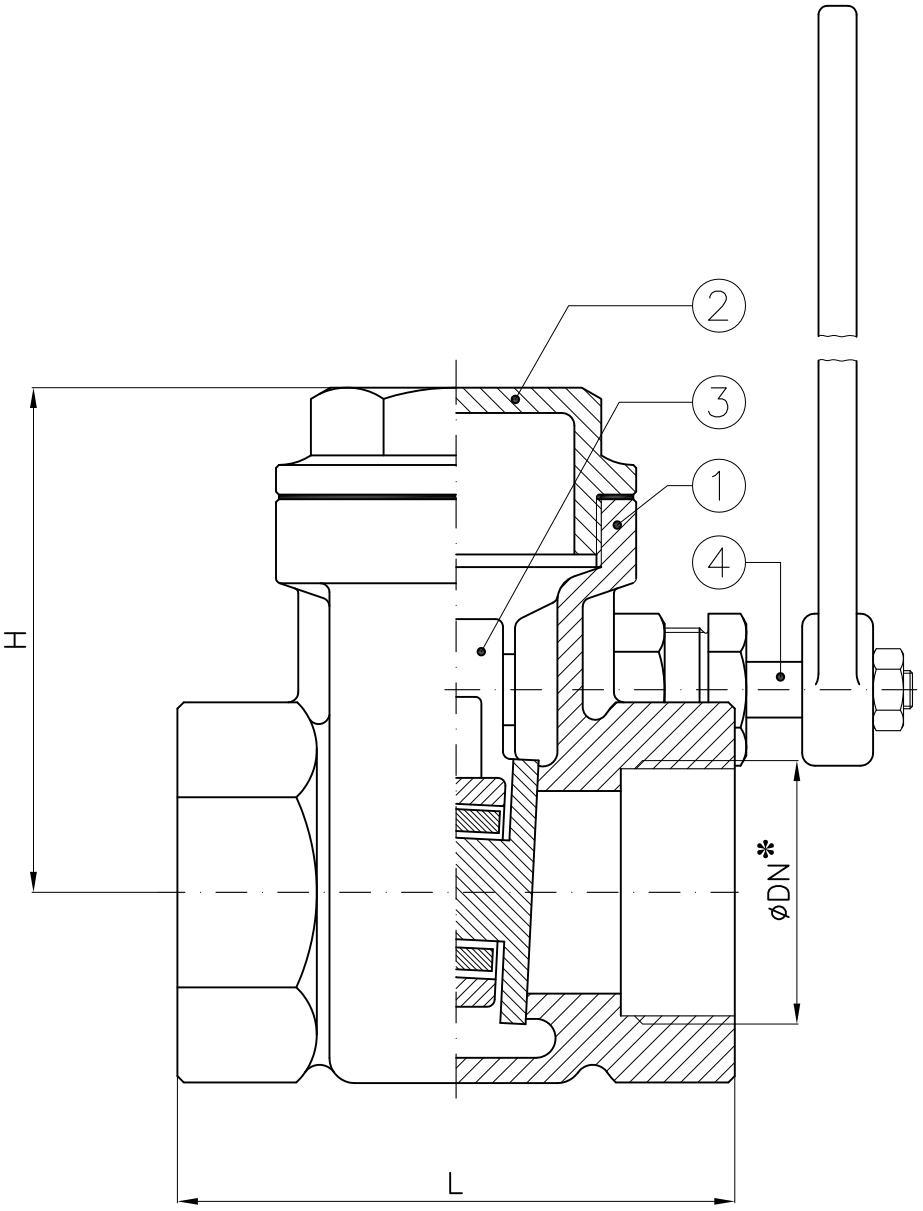

✻: Filettatura GAS
✻: *BSPP threaded*

DN	H	L	Weight (Kg)
3/8"	40	44	0.37
1/2"	40	46	0.38
3/4"	48	51	0.55
1"	55	57	0.76
1"1/4	62	61	1
1"1/2	68	67	1.4
2"	81	77	2
2"1/2	108	86	3.5
3"	121	91	4.5
4"	148	102	7.4

Combinazione materiali standard – Standard materials Combination		
		B/O
ITEM	DENOMINAZIONE DENOMINATION	MATERIALE MATERIAL
01	Body	Bronze UNI EN1982 G-CuSn5Zn5Pb5
02	Bonnet	Brass CW617N (OT58)
03	Disc	Brass CW617N (OT58)
04	Stem	Brass CW617N (OT58)
Nota: Note:	Combinazioni materiali non standard a richiesta Non standard materials combinations on request	

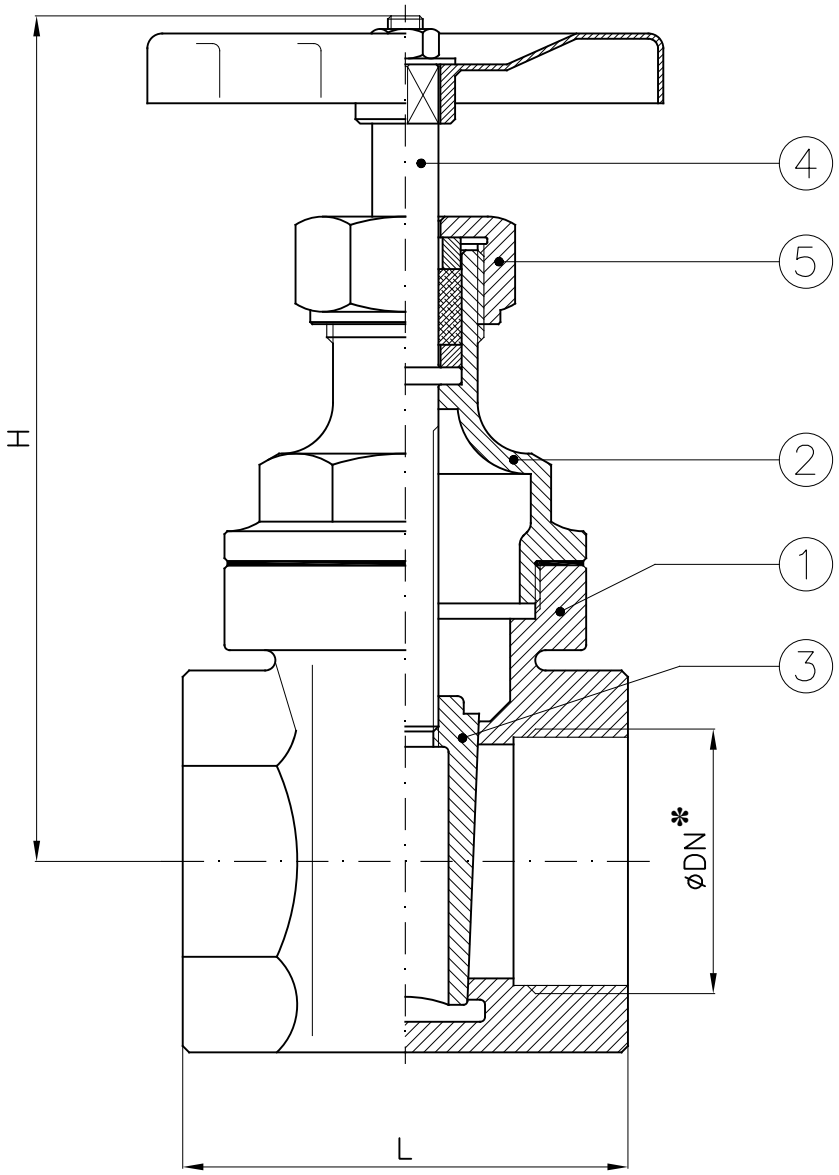

*: Filettatura GAS
*: *BSPP threaded*

DN	H	L	Weight (Kg)
3/8"	70	39	0.17
1/2"	70	38	0.2
3/4"	77	44	0.32
1"	84	47	0.4
1"1/4	107	53	0.57
1"1/2	120	58	0.8
2"	143	64	1.2
2"1/2	150	76	2.2
3"	159	79	2.7
4"	235	95	4.9

Combinazione materiali standard – Standard materials Combination		
		B/O
ITEM	DENOMINAZIONE DENOMINATION	MATERIALE MATERIAL
01	Body	Bronze UNI EN1982 G-CuSn5Zn5Pb5
02	Bonnet	Brass CW617N (OT58)
03	Plug	Brass CW617N (OT58)
04	Disc	Brass CW617N (OT58)
05	Stem	Brass CW617N (OT58)
Nota: Note:	Combinazioni materiali non standard a richiesta Non standard materials combinations on request	

Saracinesche in bronzo union bonnet GAS - NPT
Bronze gate valves union bonnet GAS - NPT

Art.28UB

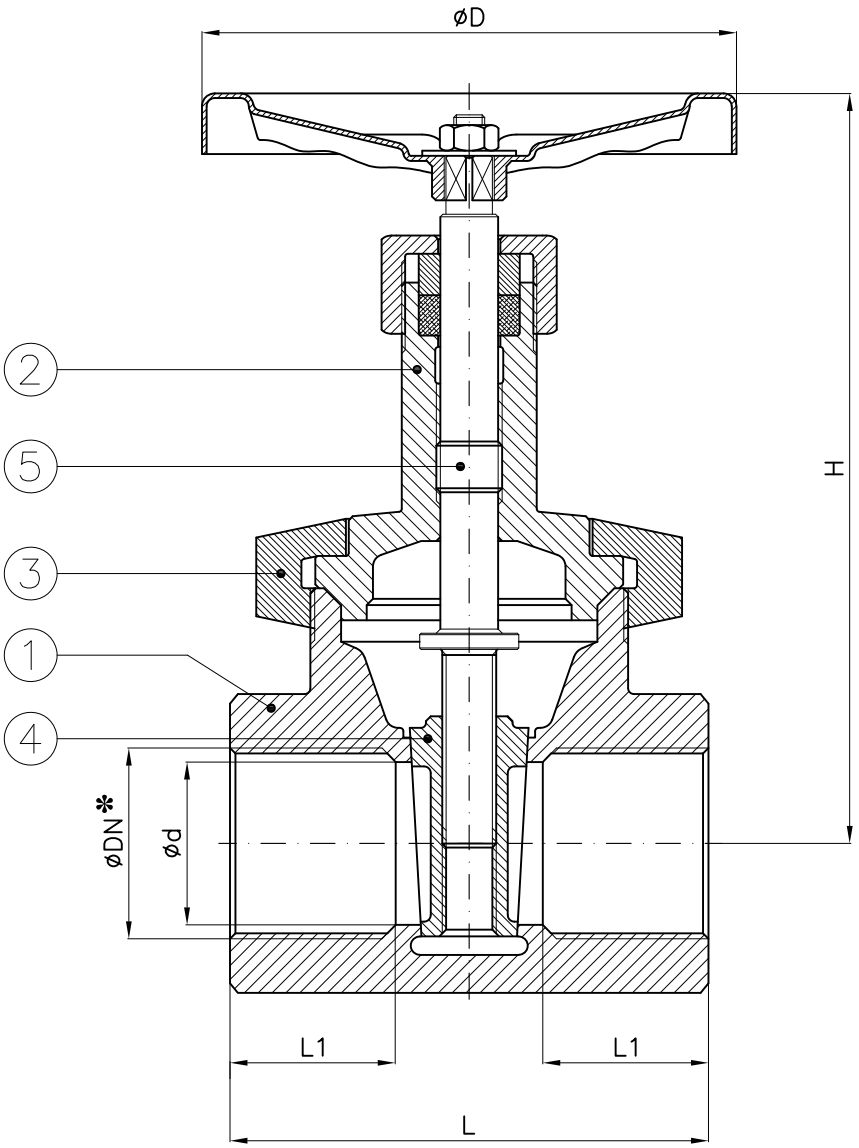

✻: Filettatura GAS – NPT
✻: *BSPP – NPT threaded*

DN	D	d	H	L	L1	Weight (Kg)
1/4"	60	12	95	41	10	0.29
3/8"	60	15	95	41	10	0.32
1/2"	60	14.5	107	45	13	0.39
3/4"	70	19	124	51	15	0.56
1"	70	24	137	55	16	0.76
1"1/4	80	32	165	61	17	1.13
1"1/2	90	36	190	70	18	1.58
2"	100	47	220	81	20	2.6
2"1/2	110	60	275	87	23	3.87
3"	120	71	295	93	24	5.4
4"	150	95	360	112	28	8.8

Combinazione materiali standard – Standard materials Combination		
		B/O
ITEM	DENOMINAZIONE DENOMINATION	MATERIALE MATERIAL
01	Body	Bronze UNI EN1982 G-CuSn5Zn5Pb5
02	Bonnet	Brass CW617N (OT58)
03	Threaded ring	Brass CW617N (OT58)
04	Disc	Brass CW617N (OT58)
05	Stem	Brass CW617N (OT58)
Nota: Note:	Combinazioni materiali non standard a richiesta Non standard materials combinations on request	

Saracinesche in bronzo PN6 - PN16
Gate valves in bronze NP6 - NP16

Art.30

Conform to:
UNI-EN1092

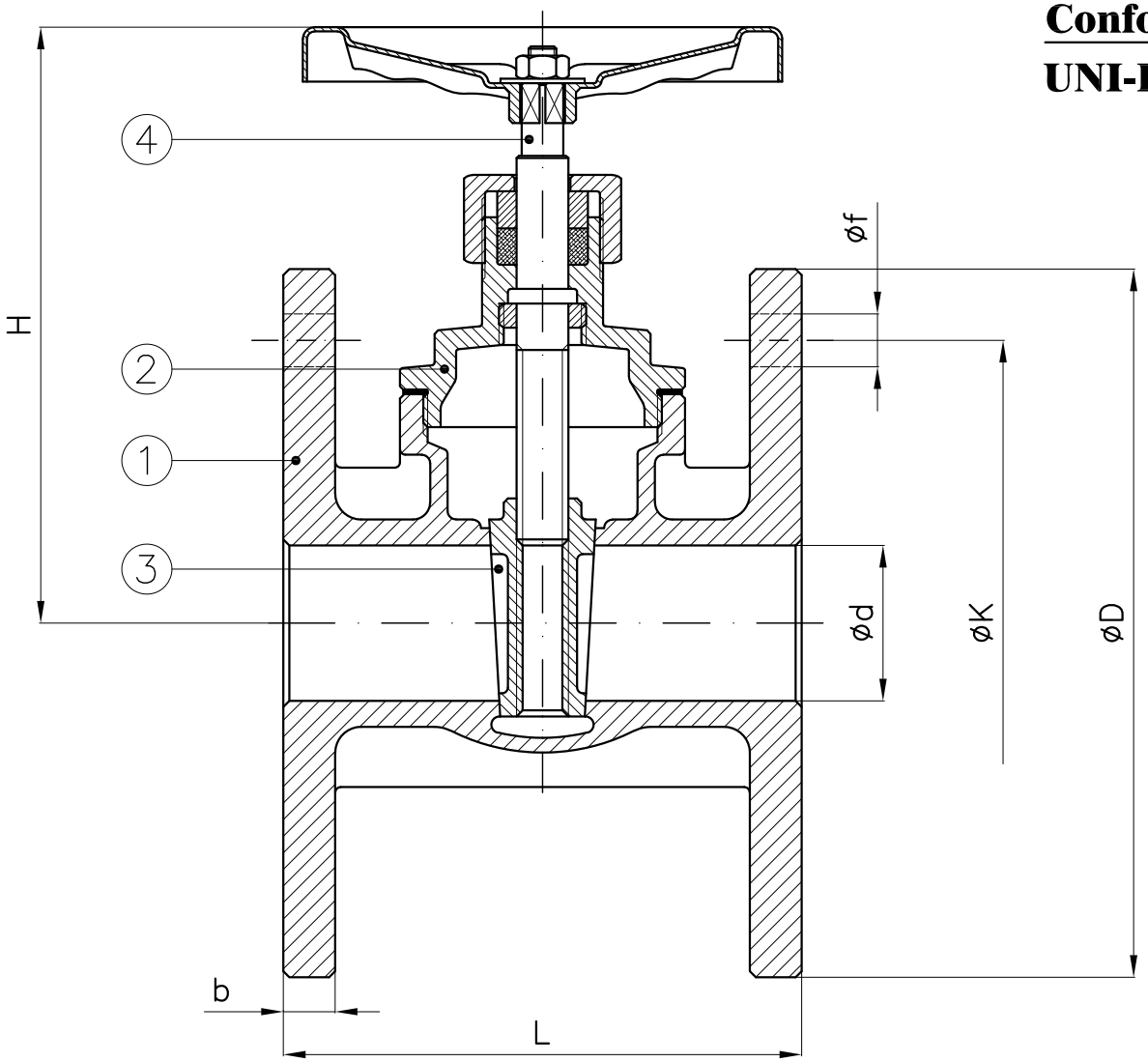

							PN6 – NP6				PN16 – NP16			
DN	b	d	H	L (type "AI")	L (type "RV")	Weight (Kg)	D	K	f	Holes NO. f	D	K	f	Holes NO. f
15	9	16	82	65	75	1.2	80	55	11	4	95	65	14	4
20	9.5	22	103	80		1.8	90	65	11	4	105	75	14	4
25	9.5	25	103	85	90	2.1	100	75	11	4	115	85	14	4
32	10.5	32	122	100		3.4	120	90	14	4	140	100	18	4
40	10.5	40	132	110		4.2	130	100	14	4	150	110	18	4
50	11	48	155	125		5.6	140	110	14	4	165	125	18	4
65	13	65	198	140	145	7.4	160	130	14	4	185	145	18	4
80	14	80	237	150	162	10	190	150	18	4	200	160	18	8
100	15	100	302	170		14.7	210	170	18	4	220	180	18	8
125	17	119	312	200		22.1	240	200	18	8	250	210	18	8
150	17	145	370	210		31	265	225	18	8	285	240	22	8

Combinazione materiali standard – Standard materials Combination			
		B/B	B/O
ITEM	DENOMINAZIONE DENOMINATION	MATERIALE MATERIAL	MATERIALE MATERIAL
01	Body	Bronze UNI EN1982 G-CuSn5Zn5Pb5	Bronze UNI EN1982 G-CuSn5Zn5Pb5
02	Bonnet	Bronze UNI EN1982 G-CuSn5Zn5Pb5	Brass CW617N (OT58)
03	Disc	Bronze UNI EN1982 G-CuSn5Zn5Pb5	Brass CW617N (OT58)
04	Stem	Bronze UNI EN1982 G-CuSn5Zn5Pb5	Brass CW617N (OT58)
Nota: Combinazioni materiali non standard a richiesta Note: Non standard materials combinations on request			

Saracinesche filettate classe 200 psi in acciaio inox AISI316
Class 200 psi threaded gate valves stainless steel AISI316

Art.2029

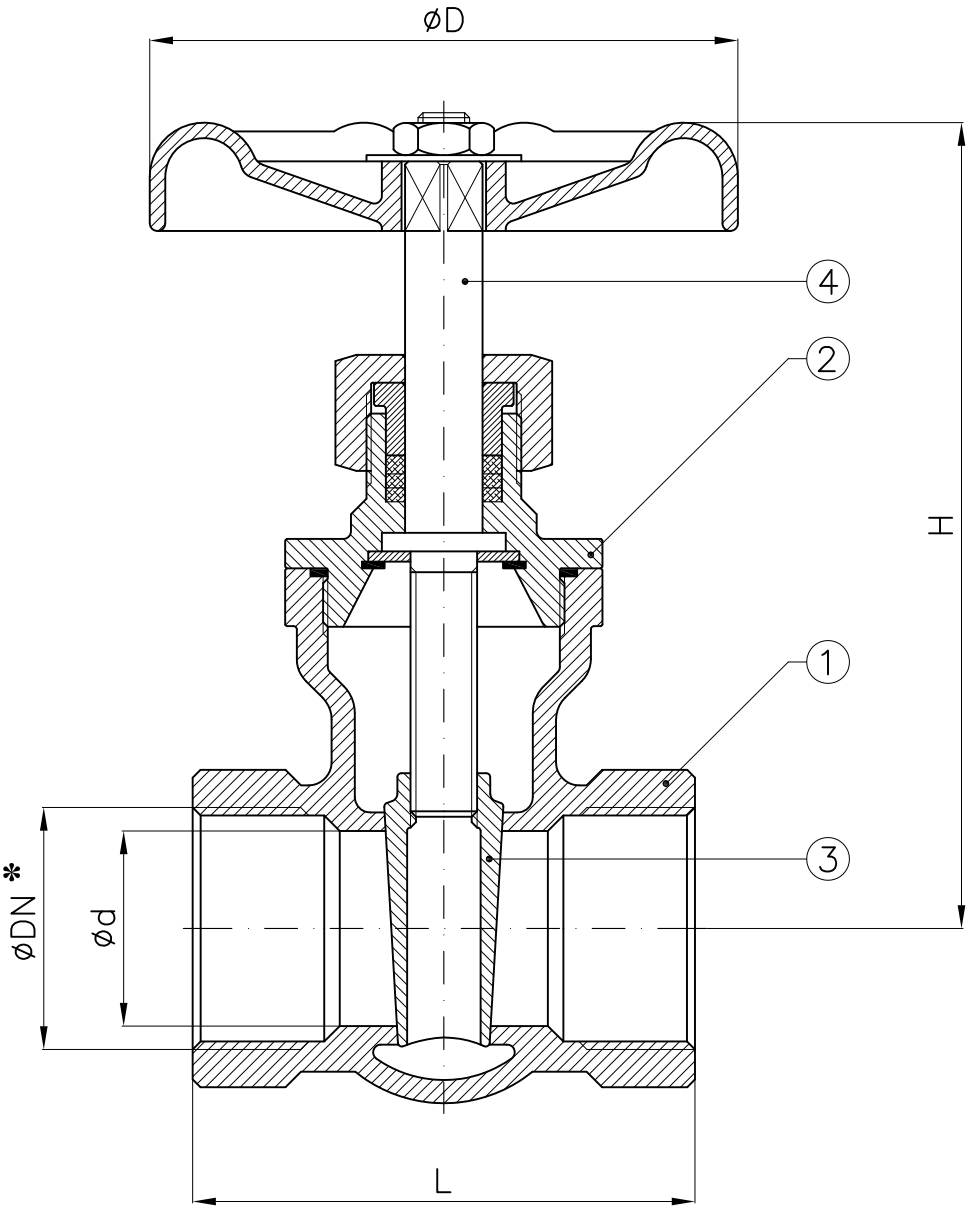

*: Filettatura GAS

*: *BSPP threaded*

DN	d	H	L
1/2"	15	92	55
3/4"	20	99	60
1"	25	113	66
1"1/4	32	128	76
1"1/2	40	147	86
2"	50	168	96

Combinazione materiali standard – Standard materials Combination		
		CF8M/316
ITEM	DENOMINAZIONE DENOMINATION	MATERIALE MATERIAL
01	Body	Stainless steel CF8M ASTM A351
02	Bonnet	Stainless steel AISI316 UNI EN10088
03	Disc	Stainless steel AISI316 UNI EN10088
04	Stem	Stainless steel AISI316 UNI EN10088
Nota: Combinazioni materiali non standard a richiesta Note: Non standard materials combinations on request		

Saracinesche in bronzo union bonnet PN25 filettate GAS - NPT
Bronze gate valves union bonnet NP25 threaded GAS - NPT

Art.28UB-RV

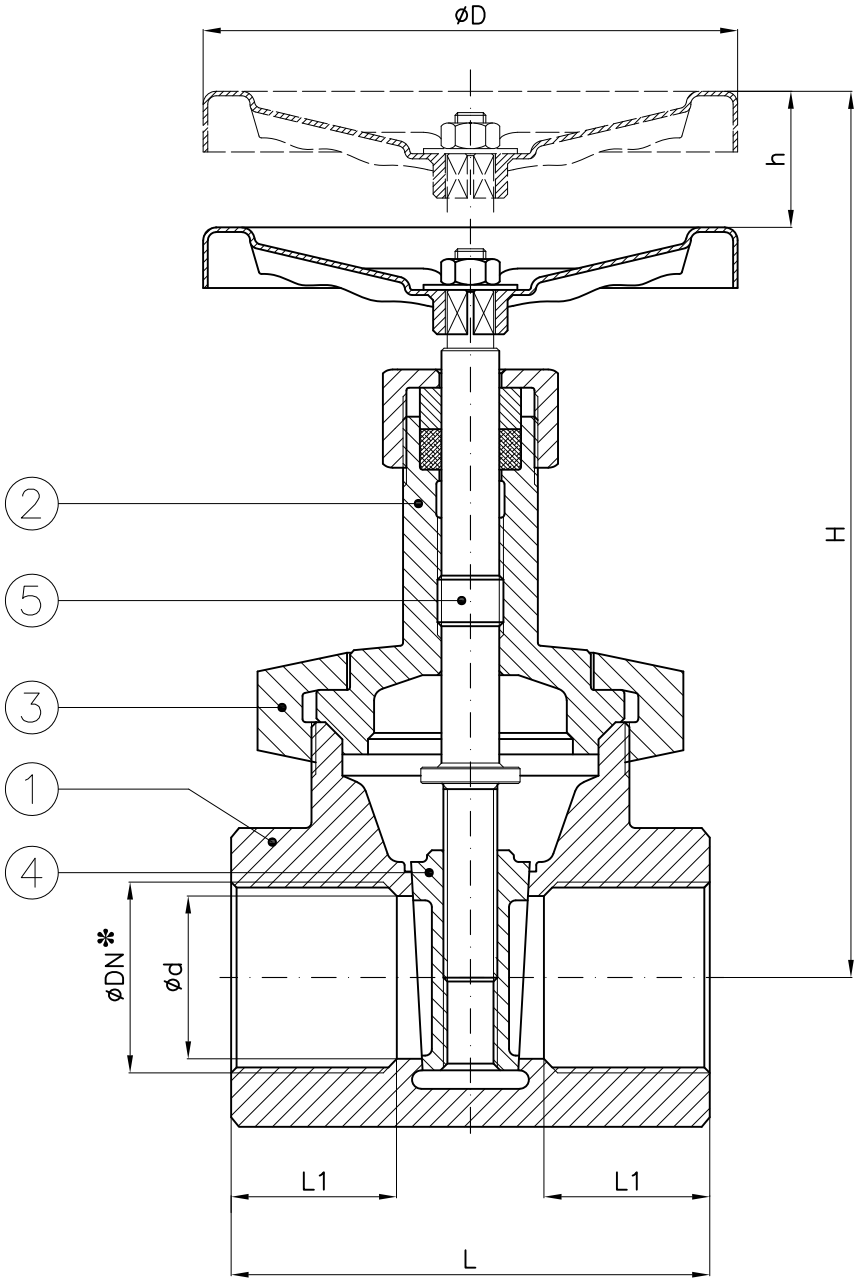

✻: Filettatura GAS – NPT
✻: *BSPP – NPT threaded*

DN	D	d	H	h	L	L1
3/8”	60	12	100	5	41	11
1/2”	60	15	112	5	45	13
3/4”	70	19	123	8	51	15
1”	70	24	139	9	56	16
1”1/4	80	32	170	12	61	17
1”1/2	90	36	192	16	70	18
2”	100	47	222	16	80	20

Combinazione materiali standard – Standard materials Combination		
		B/O
ITEM	DENOMINAZIONE DENOMINATION	MATERIALE MATERIAL
01	Body	Bronze CB491K
02	Bonnet	Bronze CB491K
03	Cover	Bronze CB491K
04	Disc	Bronze CB491K
05	Stem	Brass CW617N (OT58)

Nota: Combinazioni materiali non standard a richiesta
Note: Non standard materials combinations on request

Saracinesche flangiate classe 200 psi in acciaio inox AISI316
Class 200 psi flanged gate valves stainless steel AISI316

Art.2029-FL

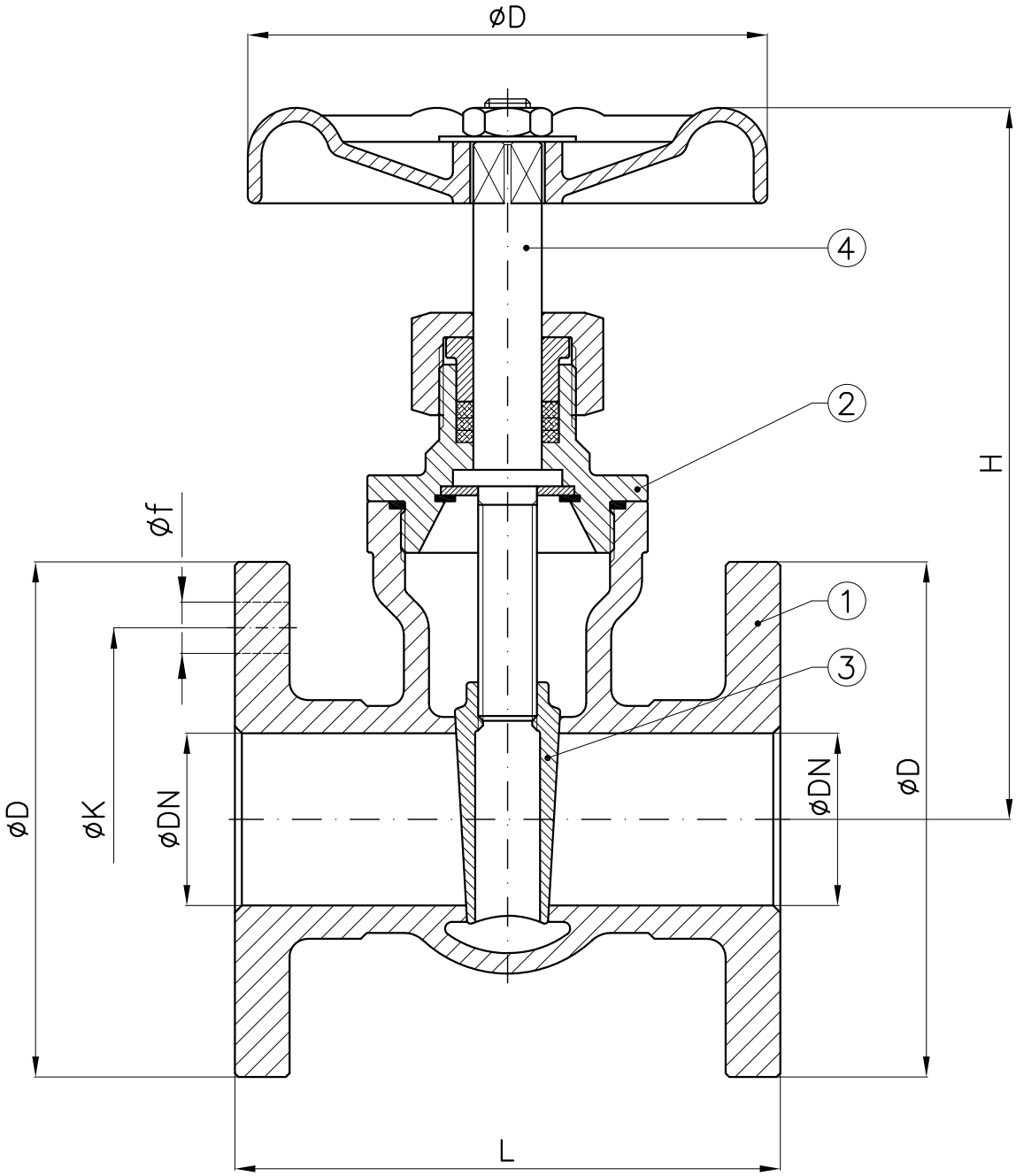

			PN6				PN16			
DN	H	L	D	K	f	Holes No. f	D	K	f	Holes No. f
15	92	85	80	55	11	4	95	65	14	4
20	99	96	90	65	11	4	105	75	14	4
25	113	103	100	75	11	4	115	85	14	4
32	128	112	120	90	14	4	140	100	18	4
40	147	120	130	100	14	4	150	110	18	4
50	168	133	140	110	14	4	165	125	18	4

Combinazione materiali standard – Standard materials Combination		
		CF8M/316
ITEM	DENOMINAZIONE DENOMINATION	MATERIALE MATERIAL
01	Body	Stainless steel CF8M ASTM A351
02	Bonnet	Stainless steel AISI316 UNI EN10088
03	Disc	Stainless steel AISI316 UNI EN10088
04	Stem	Stainless steel AISI316 UNI EN10088
Nota: Combinazioni materiali non standard a richiesta Note: Non standard materials combinations on request		

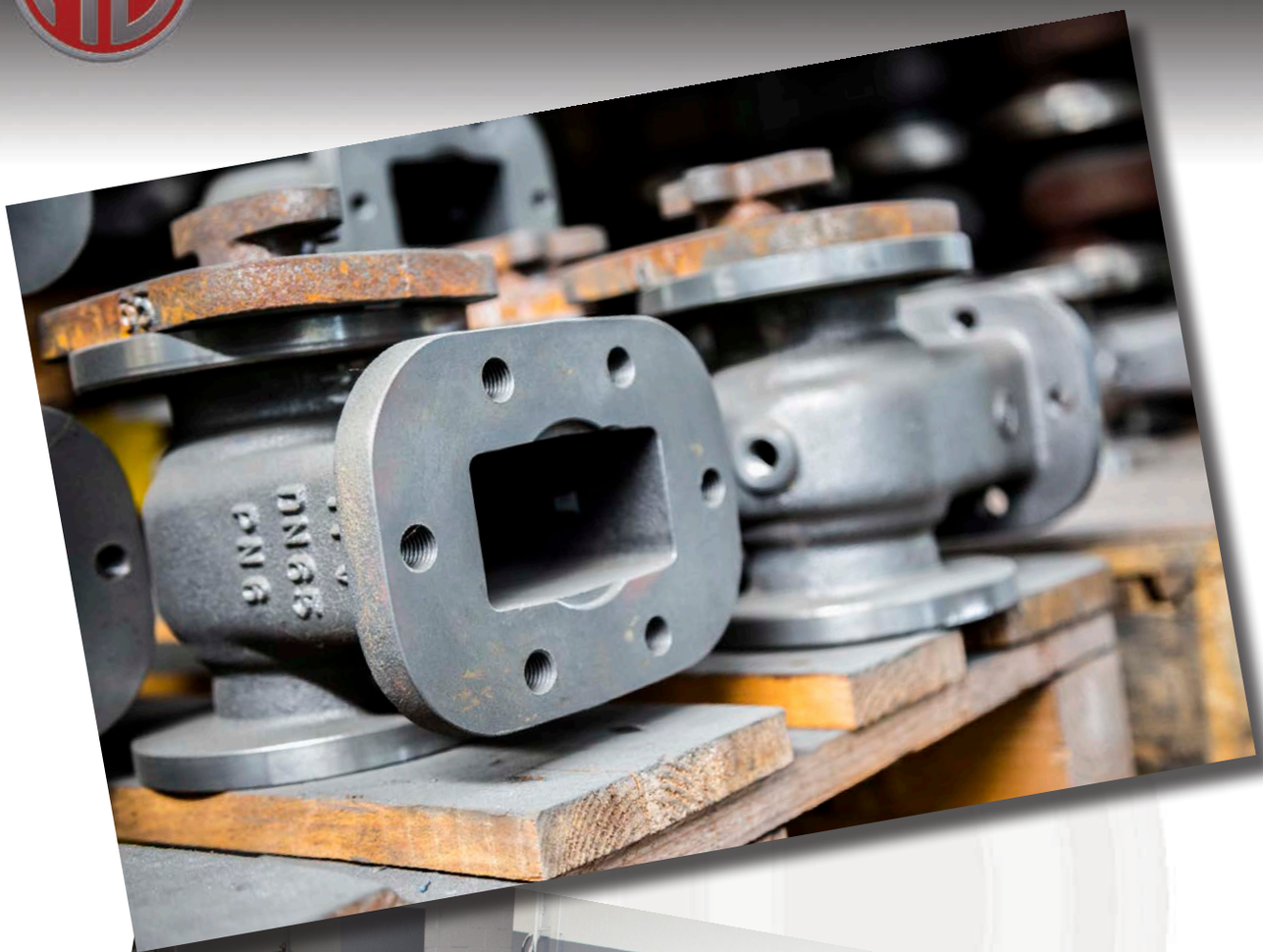

www.medanaevisca.it

Saracinesche classe ANSI150

Gate valves class ANSI150

Tab.193A

Conform to:

Test API 598
MSS SP61
ANSI B16.5
ANSI B16.10
ANSI B16.34
RF FLANGES

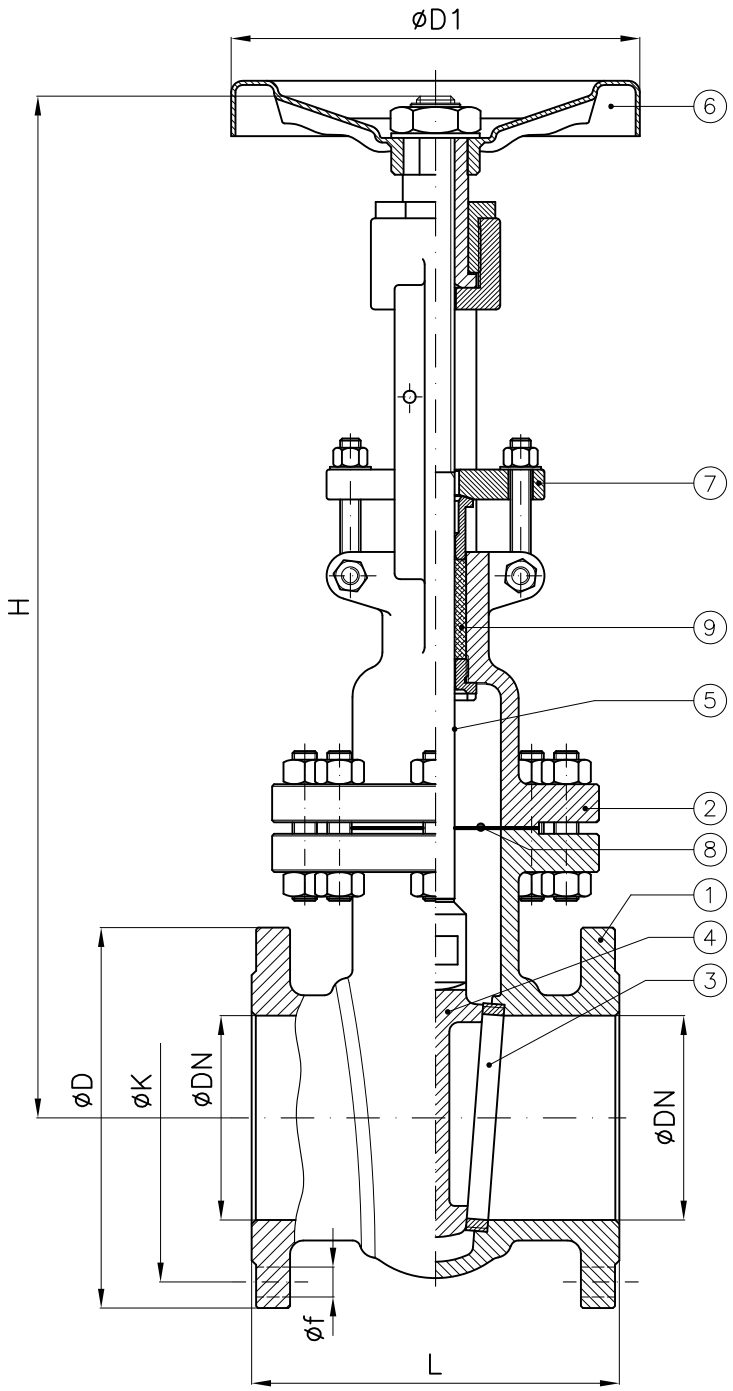

DN	D1	H (~) (Open)	H (~) (Close)	L	D	K	f	Holes NO. f	Weight (Kg)
1"1/2	175	395	345	165.1	127.0	98.4	16	4	
2"	200	455	405	177.8	152.4	120.6	19	4	
2"1/2	200	545	475	190.5	177.8	139.7	19	4	
3"	250	645	565	203.2	190.5	152.4	19	4	
4"	250	740	625	228.6	228.6	190.5	19	8	
5"	300	820	680	254.0	254.0	215.9	22	8	
6"	300	950	800	266.7	279.4	241.3	22	8	108
8"	400	1180	980	292.1	342.9	298.4	22	8	
10"	500	1385	1130	330.2	406.4	361.9	25	12	
12"	500	1660	1325	355.6	482.6	431.8	25	12	

Combinazione materiali standard – Standard Combination materials

ITEM	DENOMINAZIONE DENOMINATION	A/316 MATERIALE MATERIAL	A/420 MATERIALE MATERIAL	CF8M/316 MATERIALE MATERIAL
01	Body	Cast steel ASTM A216 WCB	Cast steel ASTM A216 WCB	Stainless steel ASTM A351 CF8M
02	Bonnet	Cast steel ASTM A216 WCB	Cast steel ASTM A216 WCB	Stainless steel ASTM A351 CF8M
03	Body seat	Stainless steel ASTM A182 (F316)	Stainless steel ASTM A182 (F6)	Stainless steel ASTM A182 (F316)
04	Disc	Cast steel WCB + S.S. A351 CF8M	Cast steel WCB + S.S. A182 (F6)	Stainless steel ASTM A351 CF8M
05	Stem	Stainless steel ASTM A182 (F316)	Stainless steel ASTM A182 (F6)	Stainless steel ASTM A182 (F316)
06	Handwheel	Sheet of carbon steel	Sheet of carbon steel	Sheet of carbon steel
07	Gland flange	Cast steel ASTM A105	Cast steel ASTM A105	Stainless steel ASTM A351 CF8M
08	Gasket	Planiflex KG carbo/C PF81	Planiflex KG carbo/C PF81	Planiflex KG carbo/C PF81
09	Packing	Carbograph GR8800	Carbograph GR8800	Carbograph GR8800

Nota: Combinazioni materiali non standard a richiesta
Note: Combinations non standard materials on request

Saracinesche classe ANSI150

Gate valves class ANSI150

Tab.193B

Conform to:

Test API 598 / API 600 / BS 5154
ANSI B16.5
ANSI B16.10
ANSI B16.24
FF or RF FLANGES

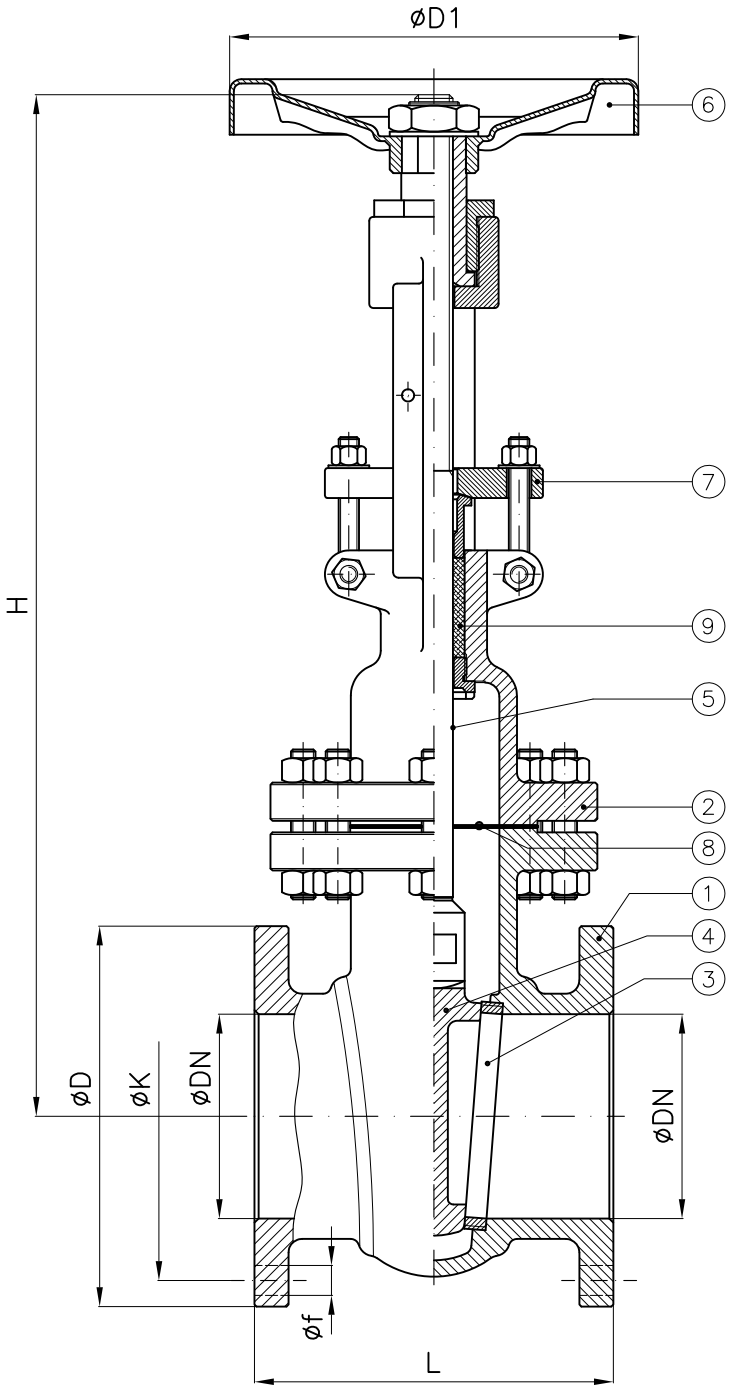

DN	D1	H (~) (Open)	H (~) (Close)	L	D	K	f	Holes NO. f	Weight (Kg)
1/2"	150	300	260	108.0	89.9	60.0	16	4	8
3/4"	150	300	260	118.0	98.4	70.0	16	4	8.5
1"	150	300	270	127.0	107.9	79.4	16	4	8.5
1"1/2	175	395	345	165.1	127.0	98.4	16	4	18
2"	200	455	405	177.8	152.4	120.6	19	4	23
2"1/2	200	545	475	190.5	177.8	139.7	19	4	34
3"	250	645	565	203.2	190.5	152.4	19	4	50
4"	250	740	625	228.6	228.6	190.5	19	8	68
5"	300	820	680	254.0	254.0	215.9	22	8	85
6"	300	950	800	266.7	279.4	241.3	22	8	108
8"	400	1180	980	292.1	342.9	298.4	22	8	186
10"	500	1385	1130	330.2	406.4	361.9	25	12	289
12"	500	1660	1325	355.6	482.6	431.8	25	12	340

Combinazione materiali standard – Standard Combination materials

ITEM	DENOMINAZIONE DENOMINATION	B/B MATERIALE MATERIAL	BA/BA MATERIALE MATERIAL
01	Body	Bronze ASTM B62	Aluminum–Bronze ASTM B148
02	Bonnet	Bronze ASTM B62	Aluminum–Bronze ASTM B148
03	Body seat	Bronze ASTM B62	Aluminum–Bronze ASTM B148
04	Disc	Bronze ASTM B62	Aluminum–Bronze ASTM B148
05	Stem	Bronze ASTM B62 or Brass	Aluminum–Bronze ASTM B148
06	Handwheel	Sheet of carbon steel	Sheet of carbon steel
07	Gland flange	Bronze ASTM B62	Aluminum–Bronze ASTM B148
08	Gasket	Planiflex KG carbo/C PF81	Planiflex KG carbo/C PF81
09	Packing	Carbograph GR8800	Carbograph GR8800

Nota: Combinazioni materiali non standard a richiesta
Note: Combinations non standard materials on request

Saracinesche classe ANSI150 - ANSI125

Gate valves class ANSI150 - ANSI125

Tab.193G

Conform to:

Test API 598
MSS SP61
ANSI B16.10
FF or RF FLANGES

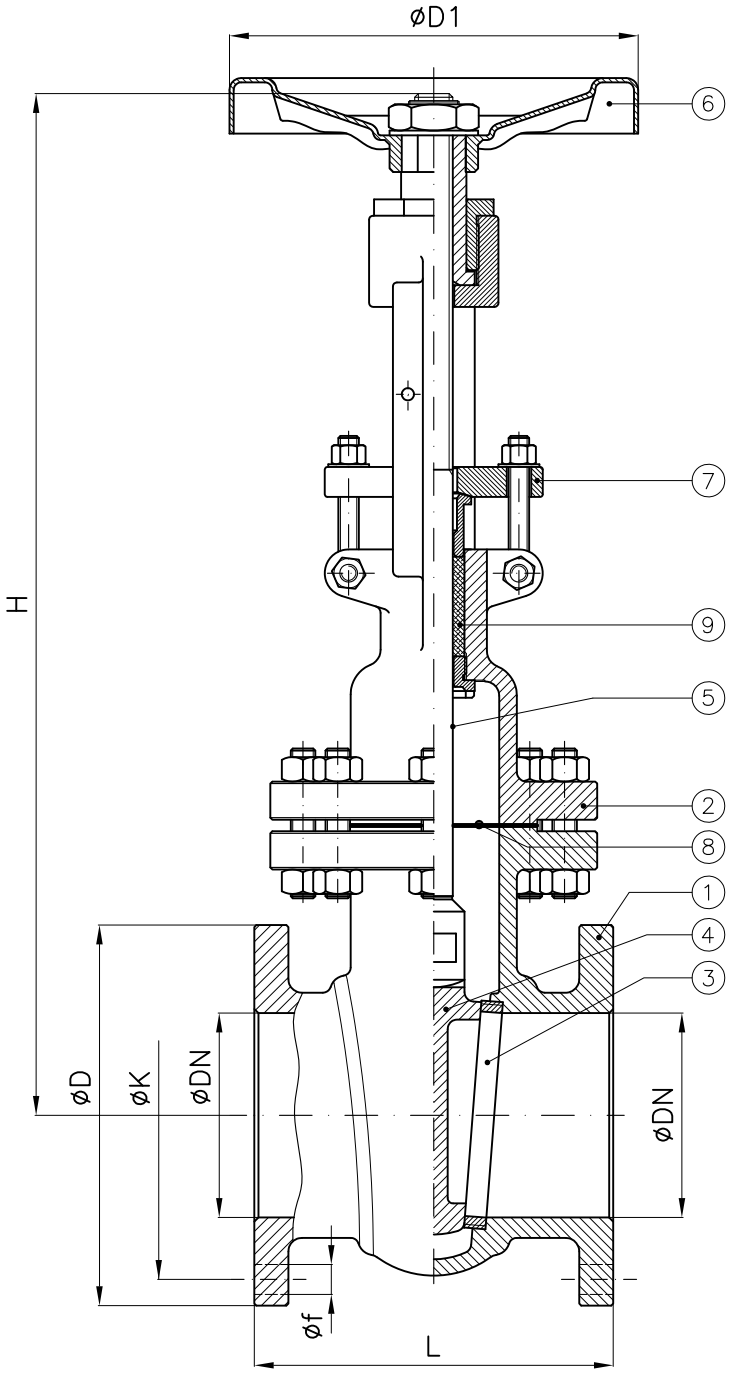

DN	D1	H (~) (Open)	H (~) (Close)	L	D	K	f	Holes NO. f	Weight (Kg)
1"1/2	175	395	345	165.1	127.0	98.4	16	4	15
2"	200	455	405	177.8	152.4	120.6	19	4	20
2"1/2	200	545	475	190.5	177.8	139.7	19	4	
3"	250	645	565	203.2	190.5	152.4	19	4	42
4"	250	740	625	228.6	228.6	190.5	19	8	59
5"	300	820	680	254.0	254.0	215.9	22	8	73
6"	300	950	800	266.7	279.4	241.3	22	8	93
8"	400	1180	980	292.1	342.9	298.4	22	8	
10"	500	1385	1130	330.2	406.4	361.9	25	12	241
12"	500	1660	1325	355.6	482.6	431.8	25	12	335

Combinazione materiali standard – Standard Combination materials

		G/316	G/B
ITEM	DENOMINAZIONE DENOMINATION	MATERIALE MATERIAL	MATERIALE MATERIAL
01	Body	Cast iron ASTM A126 GrB	Cast iron ASTM A126 GrB
02	Bonnet	Cast iron ASTM A126 GrB	Cast iron ASTM A126 GrB
03	Body seat	Stainless steel ASTM A182 (F316)	Bronze ASTM B62
04	Disc	Stainless steel ASTM A351 CF8M or Cast iron ASTM A126 GrB + S.S. CF8M	Bronze ASTM B62 or Cast iron ASTM A126 GrB + Bronze
05	Stem	Stainless steel ASTM A182 (F316)	Bronze ASTM B62 or Brass
06	Handwheel	Sheet of carbon steel	Sheet of carbon steel
07	Gland flange	Cast steel ASTM A105	Bronze ASTM B62
08	Gasket	Planiflex KG carbo/C PF81	Planiflex KG carbo/C PF81
09	Packing	Carbograph GR8800	Carbograph GR8800

Nota: Combinazioni materiali non standard a richiesta
Note: Combinations non standard materials on request

Saracinesche classe ANSI150

Gate valves class ANSI150

Tab.193GS

Conform to:

Test API 598
MSS SP61
ANSI B16.5
ANSI B16.10
ANSI B16.34
FF or RF FLANGES

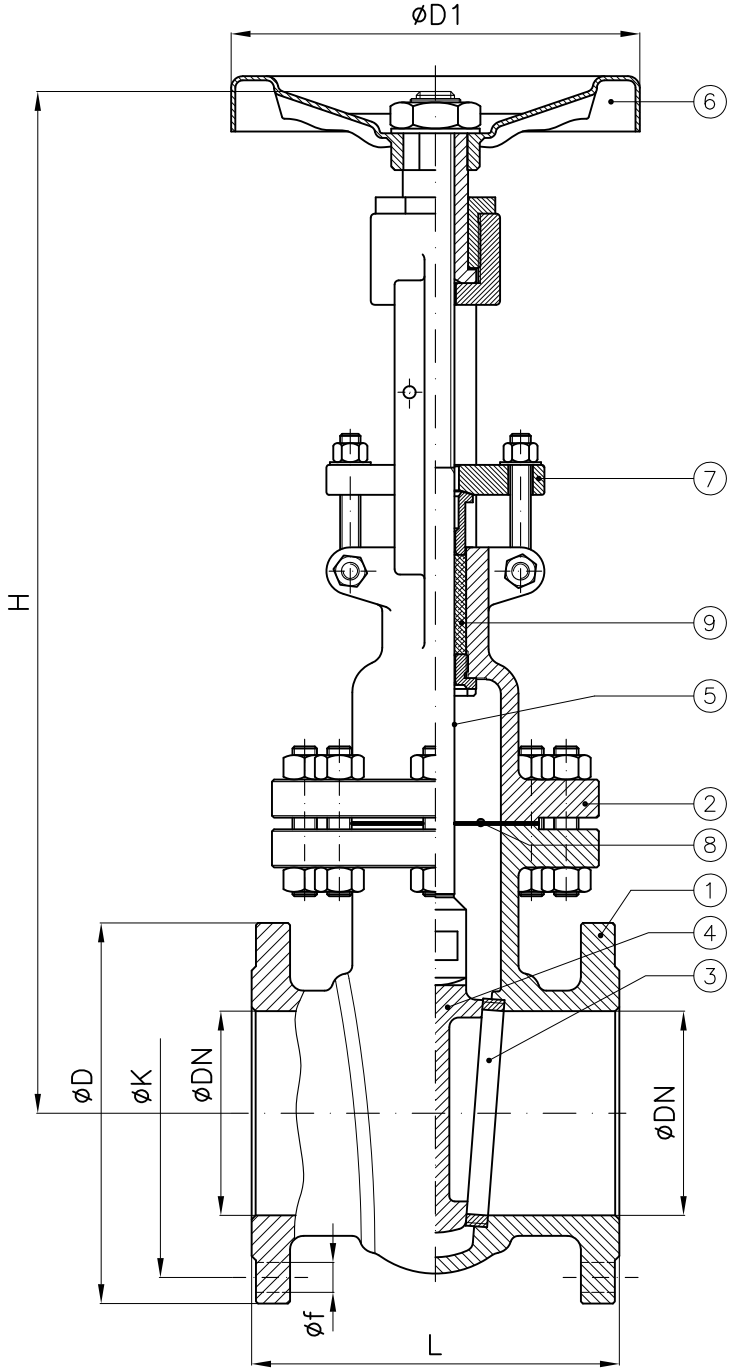

DN	D1	H (~) (Open)	H (~) (Close)	L	D	K	f	Holes NO. f	Weight (Kg)
1"1/2	175	395	345	165.1	127.0	98.4	16	4	
2"	200	455	405	177.8	152.4	120.6	19	4	20
2"1/2	200	545	475	190.5	177.8	139.7	19	4	41
3"	250	645	565	203.2	190.5	152.4	19	4	42
4"	250	740	625	228.6	228.6	190.5	19	8	59
5"	300	820	680	254.0	254.0	215.9	22	8	73
6"	300	950	800	266.7	279.4	241.3	22	8	93
8"	400	1180	980	292.1	342.9	298.4	22	8	
10"	500	1385	1130	330.2	406.4	361.9	25	12	241
12"	500	1660	1325	355.6	482.6	431.8	25	12	335

Combinazione materiali standard – Standard Combination materials			
		GS/316	GS/B
ITEM	DENOMINAZIONE DENOMINATION	MATERIALE MATERIAL	MATERIALE MATERIAL
01	Body	Nodular cast iron ASTM A395	Nodular cast iron ASTM A395
02	Bonnet	Nodular cast iron ASTM A395	Nodular cast iron ASTM A395
03	Body seat	Stainless steel ASTM A182 (F316)	Bronze ASTM B62
04	Disc	Stainless steel ASTM A351 CF8M or Nodular cast iron ASTM A395 + S.S. CF8M	Bronze ASTM B62 or Nodular cast iron ASTM A395 + Bronze
05	Stem	Stainless steel ASTM A182 (F316)	Bronze ASTM B62 or Brass
06	Handwheel	Sheet of carbon steel	Sheet of carbon steel
07	Gland flange	Cast steel ASTM A105	Bronze ASTM B62
08	Gasket	Planiflex KG carbo/C PF81	Planiflex KG carbo/C PF81
09	Packing	Carbograph GR8800	Carbograph GR8800

Nota: Combinazioni materiali non standard a richiesta
Note: Combinations non standard materials on request

Saracinesche classe ANSI300

Gate valves class ANSI300

Tab.194A

Conform to:

Test API 598
MSS SP61
ANSI B16.5
ANSI B16.10
ANSI B16.34
RF FLANGES

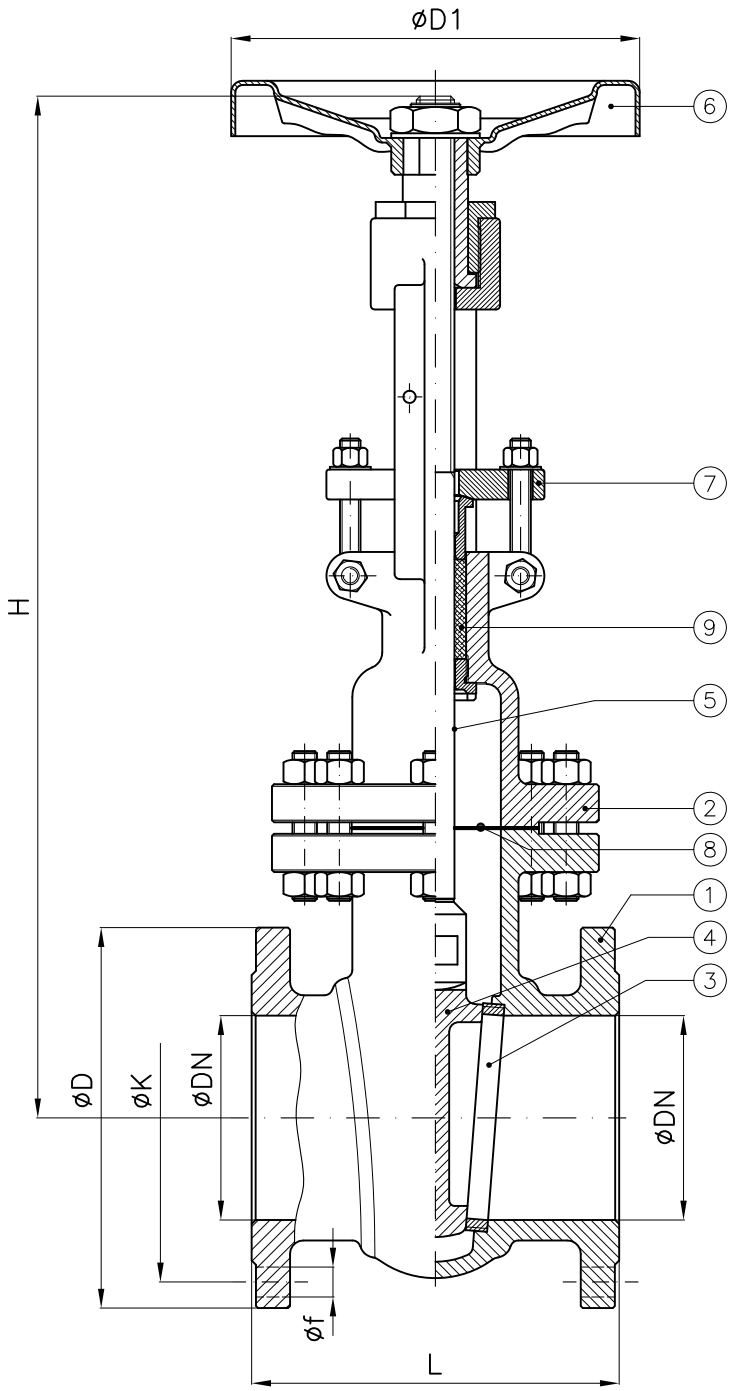

DN	D1	H (~) (Open)	H (~) (Close)	L	D	K	f	Holes NO. f	Weight (Kg)
2”	200	410	360	215.9	165	127	19	8	23
2”1/2	225	460	410	241.3	191	149	22	8	35
3”	250	500	420	282.6	210	168	22	8	44
4”	350	570	460	304.8	254	200	22	8	67
6”	400	740	590	403.2	318	270	22	12	135
8”	450	890	690	419.1	381	330	25	12	225
10”	500	1160	905	457.2	445	387	29	16	330
12”	500	1260	930	501.6	521	451	32	16	430
14”	600	1360	1000	762.0	584	514	32	20	670
16”	650	1560	1150	838.2	648	571	35	20	825
18”	700	1660	1190	914.4	711	629	35	24	1140
20”	800	1860	1350	990.6	775	686	35	24	1555

Combinazione materiali standard – Standard Combination materials

ITEM	DENOMINAZIONE DENOMINATION	A/316 MATERIALE MATERIAL	A/420 MATERIALE MATERIAL	CF8M/316 MATERIALE MATERIAL
01	Body	Cast steel ASTM A216 WCB	Cast steel ASTM A216 WCB	Stainless steel ASTM A351 CF8M
02	Bonnet	Cast steel ASTM A216 WCB	Cast steel ASTM A216 WCB	Stainless steel ASTM A351 CF8M
03	Body seat	Stainless steel ASTM A182 (F316)	Stainless steel ASTM A182 (F6)	Stainless steel ASTM A182 (F316)
04	Disc	Cast steel WCB + S.S. A351 CF8M	Cast steel WCB + S.S. A182 (F6)	Stainless steel ASTM A351 CF8M
05	Stem	Stainless steel ASTM A182 (F316)	Stainless steel ASTM A182 (F6)	Stainless steel ASTM A182 (F316)
06	Handwheel	Sheet of carbon steel	Sheet of carbon steel	Sheet of carbon steel
07	Gland flange	Cast steel ASTM A105	Cast steel ASTM A105	Stainless steel ASTM A351 CF8M
08	Gasket	Planiflex KG carbo/C PF81	Planiflex KG carbo/C PF81	Planiflex KG carbo/C PF81
09	Packing	Carbograph GR8800	Carbograph GR8800	Carbograph GR8800

Nota: Combinazioni materiali non standard a richiesta
Note: Combinations non standard materials on request

Saracinesche classe ANSI300

Gate valves class ANSI300

Tab.194B

Conform to:

Test API 598 / API 600 / BS 5154
ANSI B16.5
ANSI B16.10
ANSI B16.24
FF or RF FLANGES

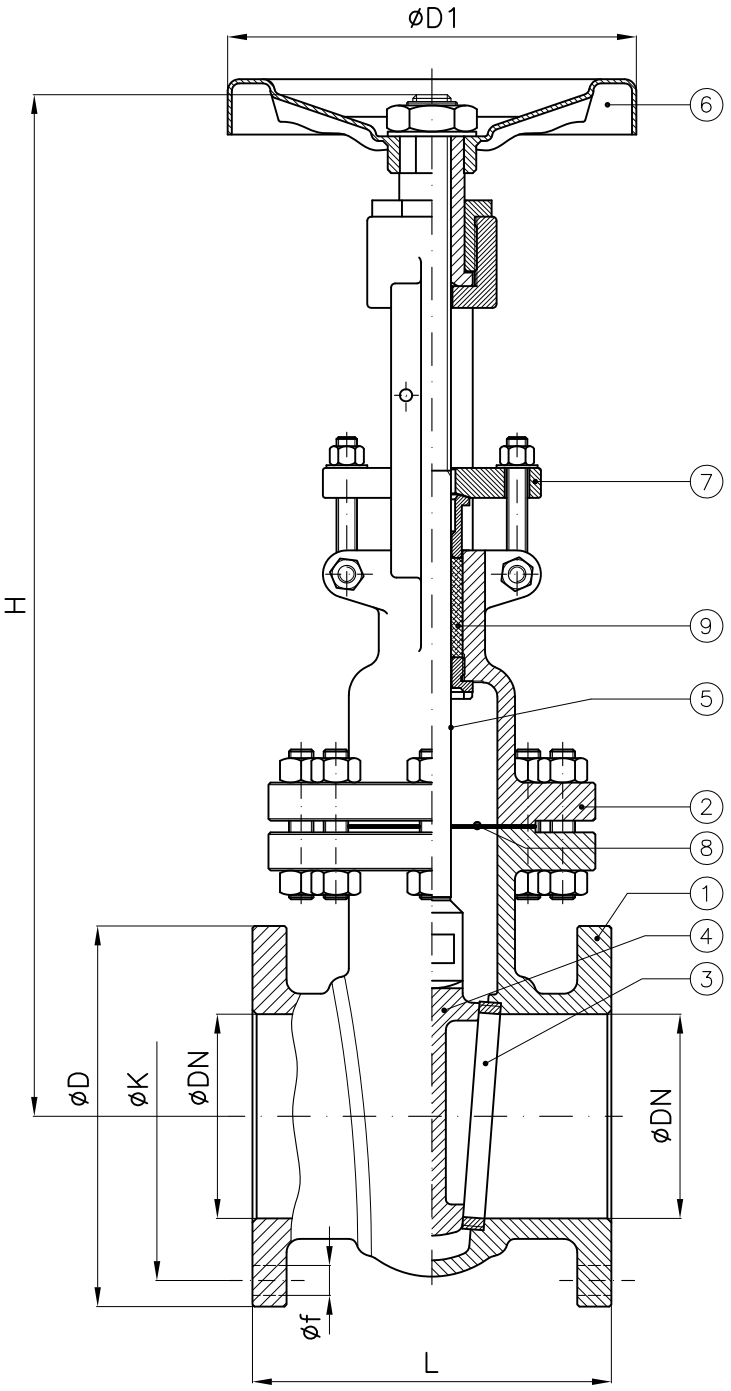

DN	D1	H (~) (Open)	H (~) (Close)	L	D	K	f	Holes NO. f	Weight (Kg)
1"	150	350	320	165.0	124	89	19	4	15
1"1/4	170	390	360	178.0	133	98	19	4	17
1"1/2	200	460	415	190.5	156	114	22	4	25
2"	200	410	360	215.9	165	127	19	8	36
2"1/2	200	525	455	241.3	191	149	22	8	48
3"	250	600	520	282.6	210	168	22	8	69
4"	300	810	700	304.8	254	200	22	8	101
5"	300	860	720	381.0	279	235	22	8	125
6"	350	990	840	403.2	318	270	22	12	140
8"	425	1205	1005	419.1	381	330	25	12	225
10"	500	1445	1195	457.2	445	387	29	16	330
12"	600	1510	1180	501.6	521	451	32	16	430
14"	600	1860	1500	762.0	584	514	32	20	670

Combinazione materiali standard – Standard Combination materials

ITEM	DENOMINAZIONE DENOMINATION	B/B MATERIALE MATERIAL	BA/BA MATERIALE MATERIAL
01	Body	Bronze ASTM B62	Aluminum–Bronze ASTM B148
02	Bonnet	Bronze ASTM B62	Aluminum–Bronze ASTM B148
03	Body seat	Bronze ASTM B62	Aluminum–Bronze ASTM B148
04	Disc	Bronze ASTM B62	Aluminum–Bronze ASTM B148
05	Stem	Bronze ASTM B62 or Brass	Aluminum–Bronze ASTM B148
06	Handwheel	Sheet of carbon steel	Sheet of carbon steel
07	Gland flange	Bronze ASTM B62	Aluminum–Bronze ASTM B148
08	Gasket	Planiflex KG carbo/C PF81	Planiflex KG carbo/C PF81
09	Packing	Carbograph GR8800	Carbograph GR8800

Nota: Combinazioni materiali non standard a richiesta
Note: Combinations non standard materials on request

Saracinesche classe ANSI300 - ANSI250

Gate valves class ANSI300 - ANSI250

Tab.194G

Conform to:

Test API 598
MSS SP61
ANSI B16.10
FF or RF FLANGES

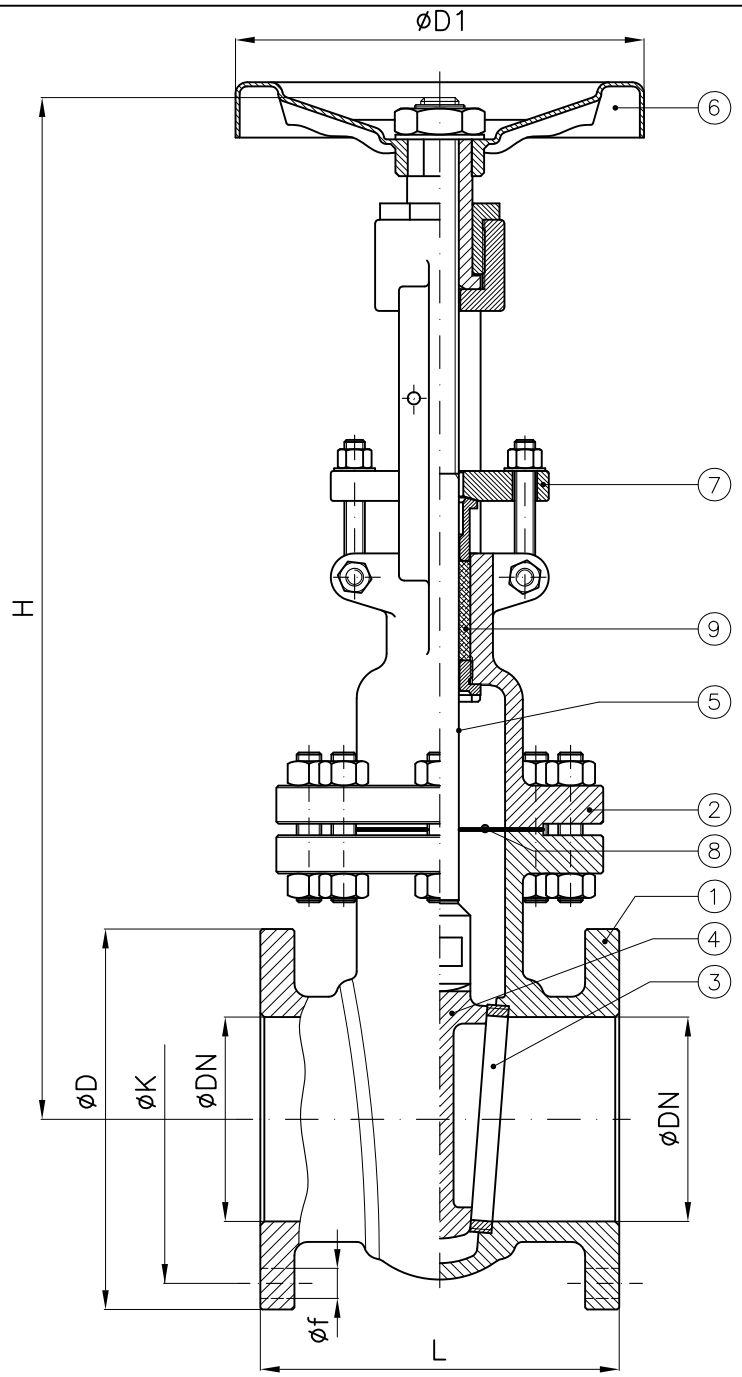

DN	D1	H (~) (Open)	H (~) (Close)	L	D	K	f	Holes NO. f	Weight (Kg)
1”	150	370	340	165.0	124	89	19	4	14
1”1/4	170	390	350	178.0	133	98	19	4	16
1”1/2	200	460	415	190.5	156	114	22	4	25
2”	200	500	450	215.9	165	127	19	8	33
2”1/2	200	525	475	241.3	191	149	22	8	48
3”	250	600	520	282.6	210	168	22	8	69
4”	300	810	710	304.8	254	200	22	8	100
5”	300	860	730	381.0	279	235	22	8	125
6”	350	990	835	403.2	318	270	22	12	160
8”	425	1205	1000	419.1	381	330	25	12	250
10”	500	1445	1190	457.2	445	387	29	16	380
12”	600	1510	1205	501.6	521	451	32	16	430
14”	600	1860	1500	762.0	584	514	32	20	600

Combinazione materiali standard – Standard Combination materials			
		G/316	G/B
ITEM	DENOMINAZIONE DENOMINATION	MATERIALE MATERIAL	MATERIALE MATERIAL
01	Body	Cast iron ASTM A126 GrB	Cast iron ASTM A126 GrB
02	Bonnet	Cast iron ASTM A126 GrB	Cast iron ASTM A126 GrB
03	Body seat	Stainless steel ASTM A182 (F316)	Bronze ASTM B62
04	Disc	Stainless steel ASTM A351 CF8M or Cast iron ASTM A126 GrB + S.S. CF8M	Bronze ASTM B62 or Cast iron ASTM A126 GrB + Bronze
05	Stem	Stainless steel ASTM A182 (F316)	Bronze ASTM B62 or Brass
06	Handwheel	Sheet of carbon steel	Sheet of carbon steel
07	Gland flange	Cast steel ASTM A105	Bronze ASTM B62
08	Gasket	Planiflex KG carbo/C PF81	Planiflex KG carbo/C PF81
09	Packing	Carbograph GR8800	Carbograph GR8800

Nota: Combinazioni materiali non standard a richiesta
Note: Combinations non standard materials on request

Saracinesche classe ANSI300

Gate valves class ANSI300

Tab.194GS

Conform to:

Test API 598
MSS SP61
ANSI B16.5
ANSI B16.10
ANSI B16.34
FF or RF FLANGES

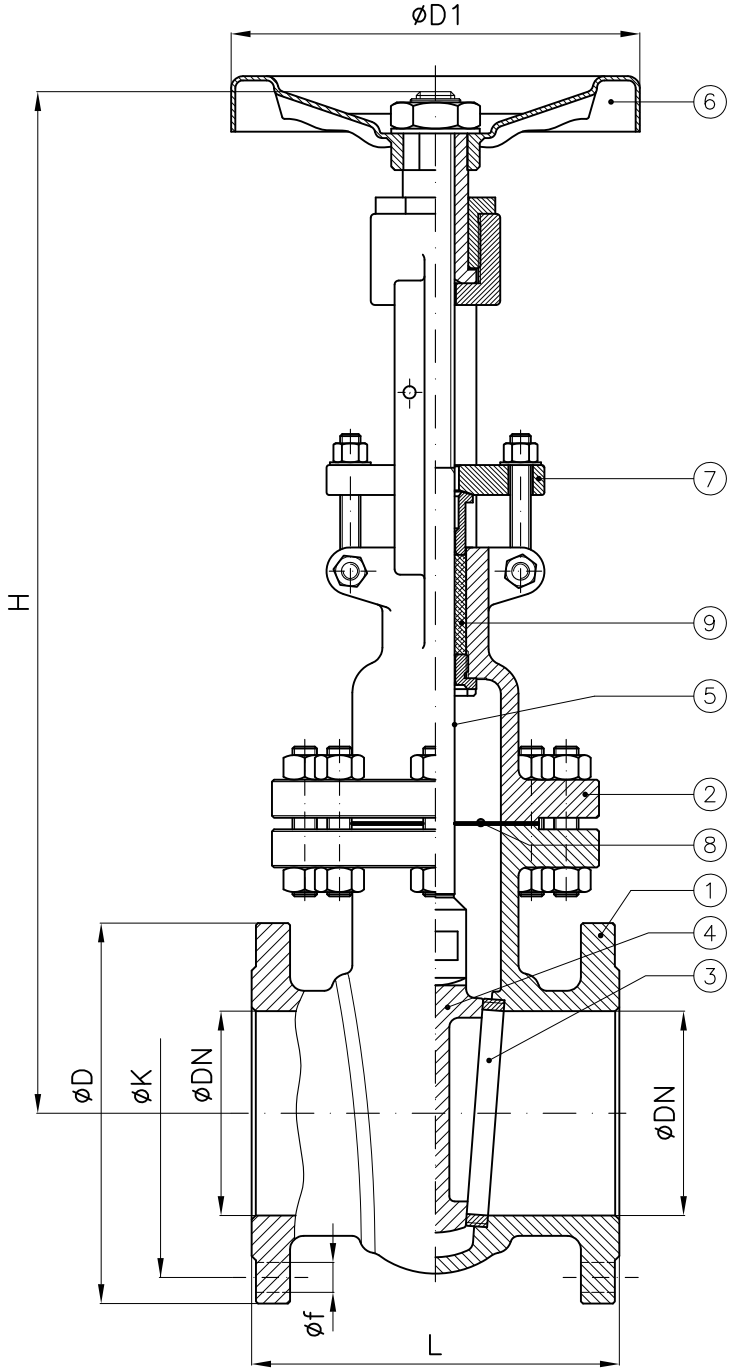

DN	D1	H (~) (Open)	H (~) (Close)	L	D	K	f	Holes NO. f	Weight (Kg)
1”	150	370	330	165.0	124	89	19	4	14
1”1/4	170	390	345	178.0	133	98	19	4	16
1”1/2	200	460	410	190.5	156	114	22	4	25
2”	200	500	445	215.9	165	127	19	8	33
2”1/2	200	525	460	241.3	191	149	22	8	48
3”	250	600	515	282.6	210	168	22	8	69
4”	300	810	715	304.8	254	200	22	8	100
5”	300	860	740	381.0	279	235	22	8	125
6”	350	990	840	403.2	318	270	22	12	160
8”	425	1205	1010	419.1	381	330	25	12	250
10”	500	1445	1190	457.2	445	387	29	16	380
12”	600	1510	1205	501.6	521	451	32	16	430
14”	600	1860	1505	762.0	584	514	32	20	470

Combinazione materiali standard – Standard Combination materials			
		GS/316	GS/B
ITEM	DENOMINAZIONE DENOMINATION	MATERIALE MATERIAL	MATERIALE MATERIAL
01	Body	Nodular cast iron ASTM A395	Nodular cast iron ASTM A395
02	Bonnet	Nodular cast iron ASTM A395	Nodular cast iron ASTM A395
03	Body seat	Stainless steel ASTM A182 (F316)	Bronze ASTM B62
04	Disc	Stainless steel ASTM A351 CF8M or Nodular cast iron ASTM A395 + S.S. CF8M	Bronze ASTM B62 or Nodular cast iron ASTM A395 + Bronze
05	Stem	Stainless steel ASTM A182 (F316)	Bronze ASTM B62 or Brass
06	Handwheel	Sheet of carbon steel	Sheet of carbon steel
07	Gland flange	Cast steel ASTM A105	Bronze ASTM B62
08	Gasket	Planiflex KG carbo/C PF81	Planiflex KG carbo/C PF81
09	Packing	Carbograph GR8800	Carbograph GR8800

Nota: Combinazioni materiali non standard a richiesta
Note: Combinations non standard materials on request

Saracinesche serie ANSI150-300 RF, 800LBS SW-BW
Gate valves type ANSI150-300 RF, 800LBS SW-BW

Tab.199GA

Conform to:
ANSI B16.5

Type
199 GA–FL

Conform to:
ANSI B16.34

Type
199 GA

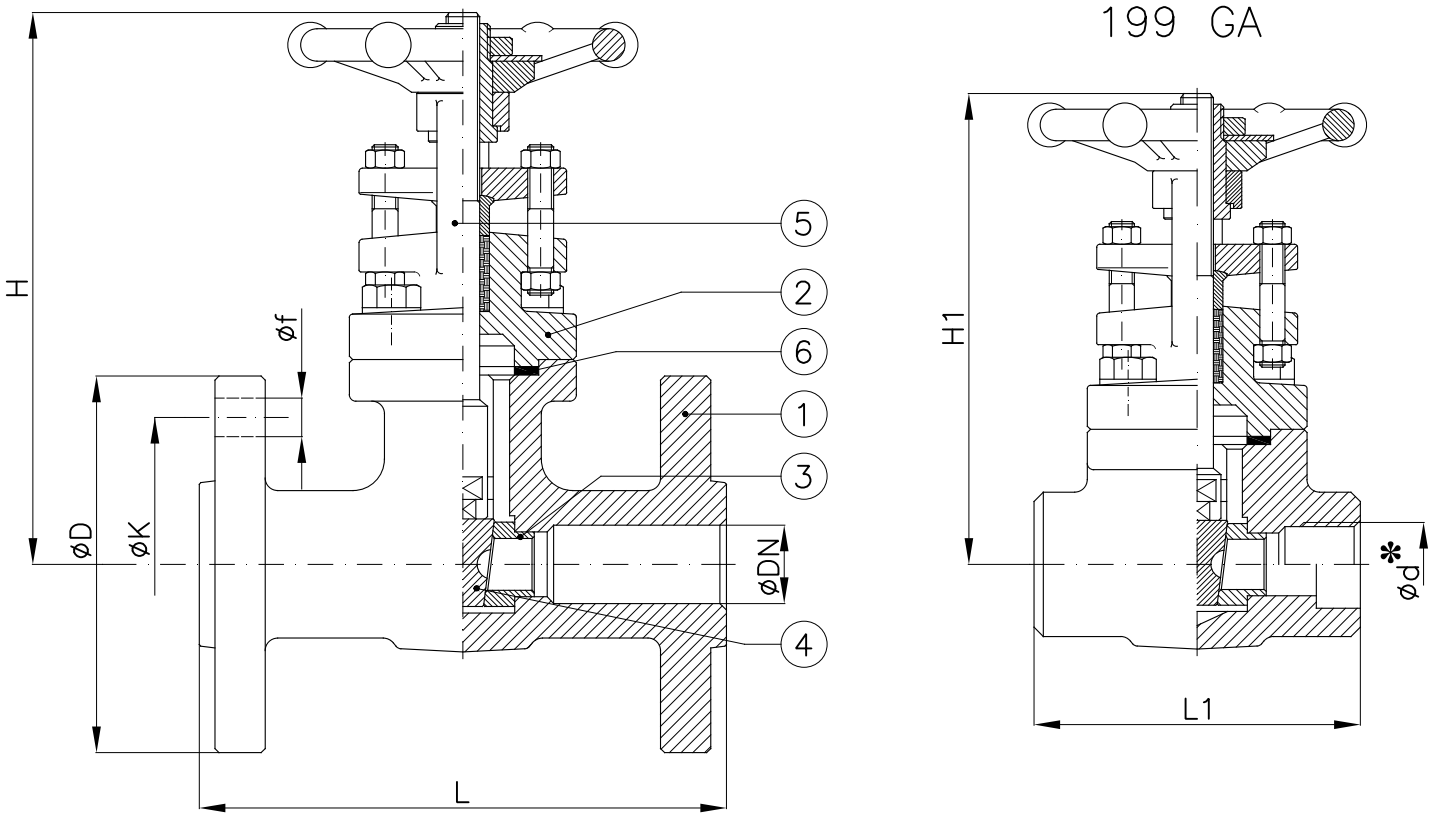

*: Filettatura GAS

*: *BSPP threaded*

		ANSI150							ANSI300							CLASS 800		
DN	d	H (≃) aperta/open	L	D	K	f	Holes NO. f	Weight (Kg)	H (≃) aperta/open	L	D	K	f	Holes NO. f	Weight (Kg)	H1 (≃) aperta/open	L1	Weight (Kg)
15	1/2"	180	108	88.9	60	16	4	3.1	180	140	95	67	16	4	4	145	80	1.8
20	3/4"	185	118	98.4	70	16	4	4	188	153	117	83	19	4	5.4	155	90	2.1
25	1"	210	127	108	79	16	4	5.7	210	165	124	89	19	4	6.5	185	110	3.6
32	1"1/4	–	–	–	–	–	–	–	–	–	–	–	–	–	–	218	127	5.3
40	1"1/2	270	165	127	98	16	4	10.6	270	191	156	114	22	4	13	255	127	7.5
50	2"	300	178	152	121	19	4	15.4	312	216	165	127	19	8	17.4	277	130	9.8

Combinazione materiali standard – Standard materials Combination			
		A/420	316/316
ITEM	DENOMINAZIONE DENOMINATION	MATERIALE MATERIAL	MATERIALE MATERIAL
01	Body	Forged steel ASTM A105N	Stainless steel ASTM A182 F316L
02	Bonnet	Forged steel ASTM A105N	Stainless steel ASTM A182 F316L
03	Body seat	Stainless steel A479 TP420	Stainless steel A479 TP316L
04	Disc	Stainless steel A479 TP420	Stainless steel A479 TP316L
05	Stem	Stainless steel A479 TP420	Stainless steel A479 TP316L
06	Gasket	F316 + Graphite	F316 + Graphite
Nota: Note:	Combinazioni materiali non standard a richiesta Non standard materials combinations on request		

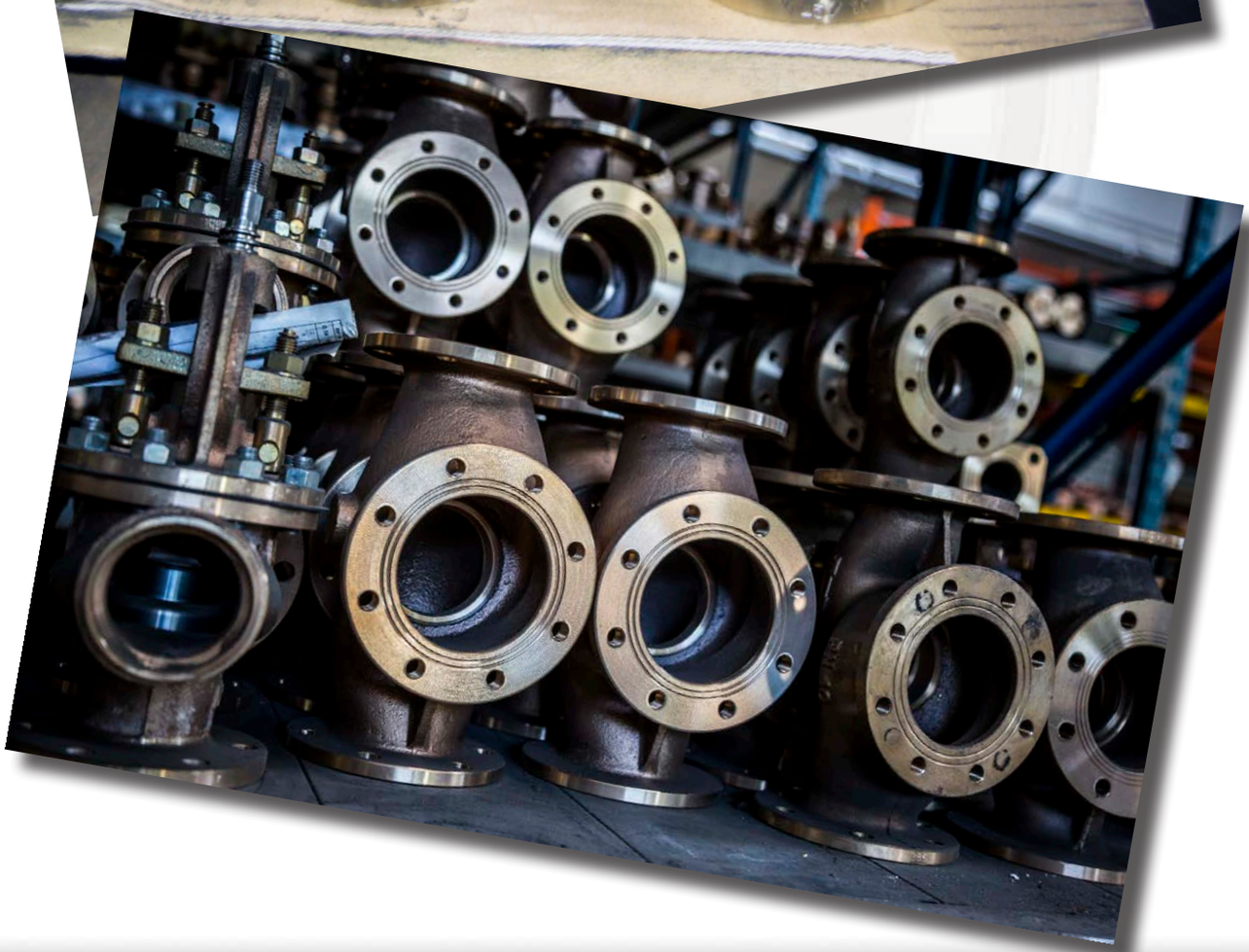

www.medanaevisca.it

Valvole di scarico fuori bordo PN6 - UNAV5702 - UNAV5703
Storm valves NP6 - UNAV5702 - UNAV5703

Tab.147

Conform to:
UNI EN1092
NI407421
NI407441

RF FLANGES: A/GS
FF FLANGES: B

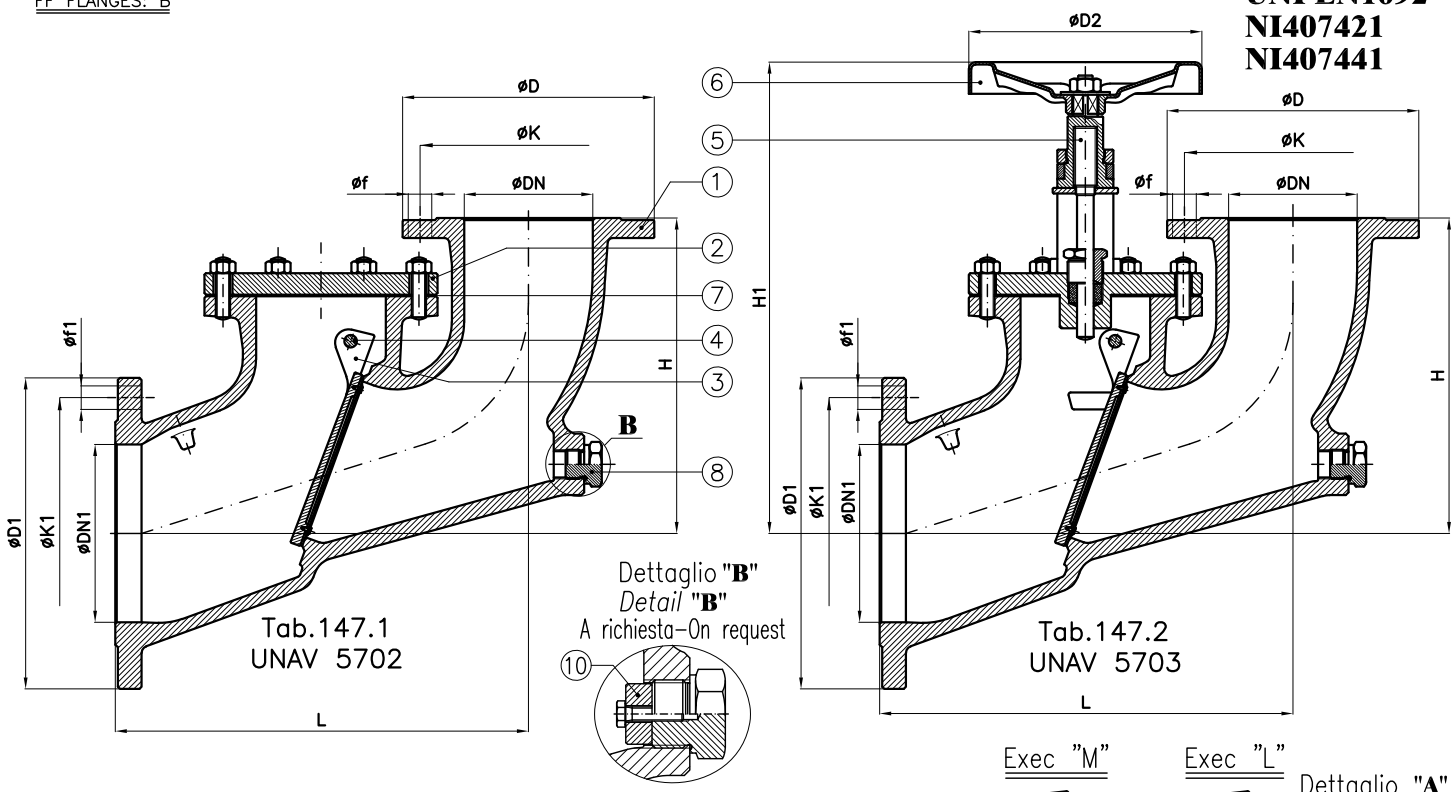

Tipo – Type	Caratteristiche – Specification
UNAV 5702	Senza bloccaggio Without geared for screw-down shut-off
UNAV 5703	Con sistema di bloccaggio e regolazione apertura Geared for screw-down shut-off

DN	DN1	D2	L	H (~)	H1 (~)	D	K	f	Holes NO. f	D1	K1	f1	Holes NO. f1	Tab147.1 Weight (Kg)	Tab147.2 Weight (Kg)
50	80	150	210	145	265	140	110	14	4	190	150	18	4	9	12
65	100	150	220	160	285	160	130	14	4	210	170	18	4	16	19
80	125	175	250	190	330	190	150	18	4	240	200	18	8	24	27
100	150	175	290	220	365	210	170	18	4	265	225	18	8	31	36
125	175	200	320	260	415	240	200	18	8	295	255	18	8	42	46
150	200	200	345	285	460	265	225	18	8	320	280	18	8	56	58
200	250	225	525	400	500	320	280	18	8	375	335	18	12	93	95
250	350	250	675	460	640	375	335	18	12	490	445	22	12	179	181
300	400	250	795	545	710	440	395	22	12	540	495	22	16	234	236

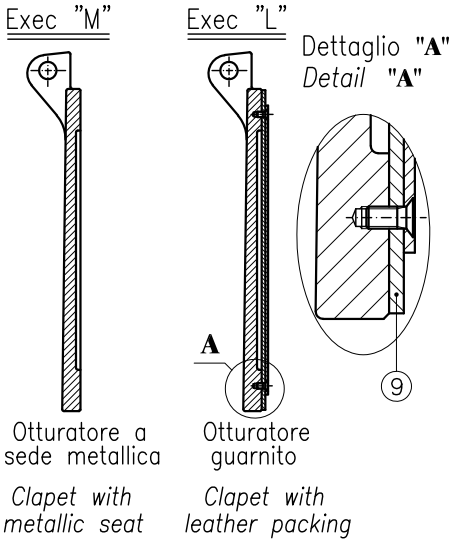

Combinazione materiali standard – Standard materials Combination						
		A/316	A/B	B/B	GS/316	GS/B
ITEM	DENOMINAZIONE DENOMINATION	MATERIALE MATERIAL	MATERIALE MATERIAL	MATERIALE MATERIAL	MATERIALE MATERIAL	MATERIALE MATERIAL
01	Body	Cast steel GP240-GH UNI EN10213	Cast steel GP240-GH UNI EN10213	Bronze UNI EN1982 G-CuSn5Zn5Pb5	Nodular cast iron EN-GJS-400-15U UNI EN1563	Nodular cast iron EN-GJS-400-15U UNI EN1563
02	Bonnet	Cast steel GP240-GH UNI EN10213	Cast steel GP240-GH UNI EN10213	Bronze UNI EN1982 G-CuSn5Zn5Pb5	Nodular cast iron EN-GJS-400-15U UNI EN1563	Nodular cast iron EN-GJS-400-15U UNI EN1563
03	Disc	Stainless steel AISI316 UNI EN10088	Bronze UNI EN1982 G-CuSn5Zn5Pb5	Bronze UNI EN1982 G-CuSn5Zn5Pb5	Stainless steel AISI316 UNI EN10088	Bronze UNI EN1982 G-CuSn5Zn5Pb5
04	Pin	Stainless steel AISI316 UNI EN10088	Stainless steel AISI316 UNI EN10088	Stainless steel AISI316 UNI EN10088	Stainless steel AISI316 UNI EN10088	Stainless steel AISI316 UNI EN10088
05	Stem	Stainless steel AISI316 UNI EN10088	Brass CW617N (OT58)	Brass CW617N (OT58)	Stainless steel AISI316 UNI EN10088	Brass CW617N (OT58)
06	Handwheel	Sheet of carbon steel	Sheet of carbon steel	Sheet of carbon steel	Sheet of carbon steel	Sheet of carbon steel
07	Gasket	EPDM	EPDM	EPDM	EPDM	EPDM
08	Plug	Brass CW617N (OT58)	Brass CW617N (OT58)	Brass CW617N (OT58)	Brass CW617N (OT58)	Brass CW617N (OT58)
09	Disc seat	Metallic/leather packing	Metallic/leather packing	Metallic/leather packing	Metallic/leather packing	Metallic/leather packing
10	Sacrificial anode (≥ND150)	ZINC	ZINC	ZINC	ZINC	ZINC

Nota: Combinazioni materiali non standard a richiesta
Note: Non standard materials combinations on request

Valvole di scarico fuori bordo PN6 - UNAV5704

Storm valves NP6 - UNAV5704

Tab.148

Conform to:

UNI EN1092
NE407431

RF FLANGES: A/GS

FF FLANGES: B

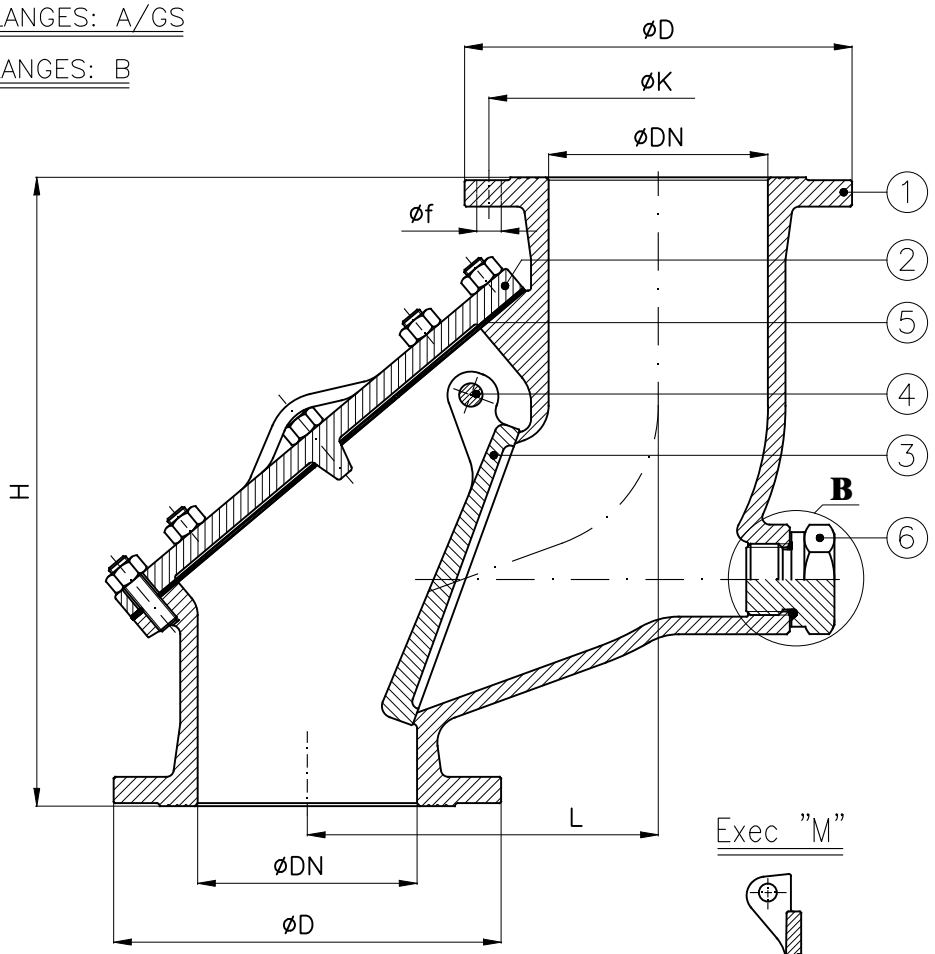

Dettaglio **"B"**
Detail **"B"**
A richiesta–On request

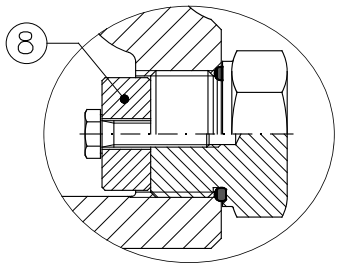

Exec "M"

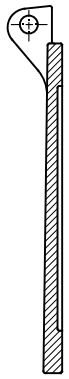

Otturatore a sede metallica

Clapet with metallic seat

Exec "L"

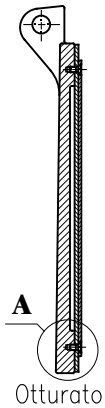

Otturatore guarnito

Clapet with leather packing

Dettaglio **"A"**
Detail **"A"**

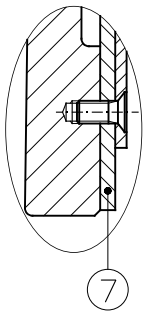

DN	L	H (~)	D	K	f	Holes NO. f	Weight (Kg)
65	110	260	160	130	14	4	17
80	135	305	190	150	18	4	30
100	165	345	210	170	18	4	41
125	205	390	240	200	18	8	60
150	240	430	265	225	18	8	74
175	285	500	295	255	18	8	91
200	285	505	320	280	18	8	93
250	385	620	375	335	18	12	171

Combinazione materiali standard – Standard materials Combination

		A/316	A/B	B/B	GS/316	GS/B
ITEM	DENOMINAZIONE DENOMINATION	MATERIALE MATERIAL	MATERIALE MATERIAL	MATERIALE MATERIAL	MATERIALE MATERIAL	MATERIALE MATERIAL
01	Body	Cast steel GP240–GH UNI EN10213	Cast steel GP240–GH UNI EN10213	Bronze UNI EN1982 G–CuSn5Zn5Pb5	Nodular cast iron EN–GJS–400–15U UNI EN1563	Nodular cast iron EN–GJS–400–15U UNI EN1563
02	Bonnet	Cast steel GP240–GH UNI EN10213	Cast steel GP240–GH UNI EN10213	Bronze UNI EN1982 G–CuSn5Zn5Pb5	Nodular cast iron EN–GJS–400–15U UNI EN1563	Nodular cast iron EN–GJS–400–15U UNI EN1563
03	Disc	Stainless steel AISI316 UNI EN10088	Bronze UNI EN1982 G–CuSn5Zn5Pb5	Bronze UNI EN1982 G–CuSn5Zn5Pb5	Stainless steel AISI316 UNI EN10088	Bronze UNI EN1982 G–CuSn5Zn5Pb5
04	Pin	Stainless steel AISI316 UNI EN10088	Stainless steel AISI316 UNI EN10088	Stainless steel AISI316 UNI EN10088	Stainless steel AISI316 UNI EN10088	Stainless steel AISI316 UNI EN10088
05	Gasket	EPDM	EPDM	EPDM	EPDM	EPDM
06	Plug	Brass CW617N (OT58)	Brass CW617N (OT58)	Brass CW617N (OT58)	Brass CW617N (OT58)	Brass CW617N (OT58)
07	Disc seat	Metallic/leather packing	Metallic/leather packing	Metallic/leather packing	Metallic/leather packing	Metallic/leather packing
08	Sacrificial anode (≥ND150)	ZINC	ZINC	ZINC	ZINC	ZINC

Nota: Combinazioni materiali non standard a richiesta
Note: Non standard materials combinations on request

Valvole di scarico fuori bordo PN6 - UNAV5705

Storm valves NP6 - UNAV5705

Tab.149

Conform to:
UNI EN1092

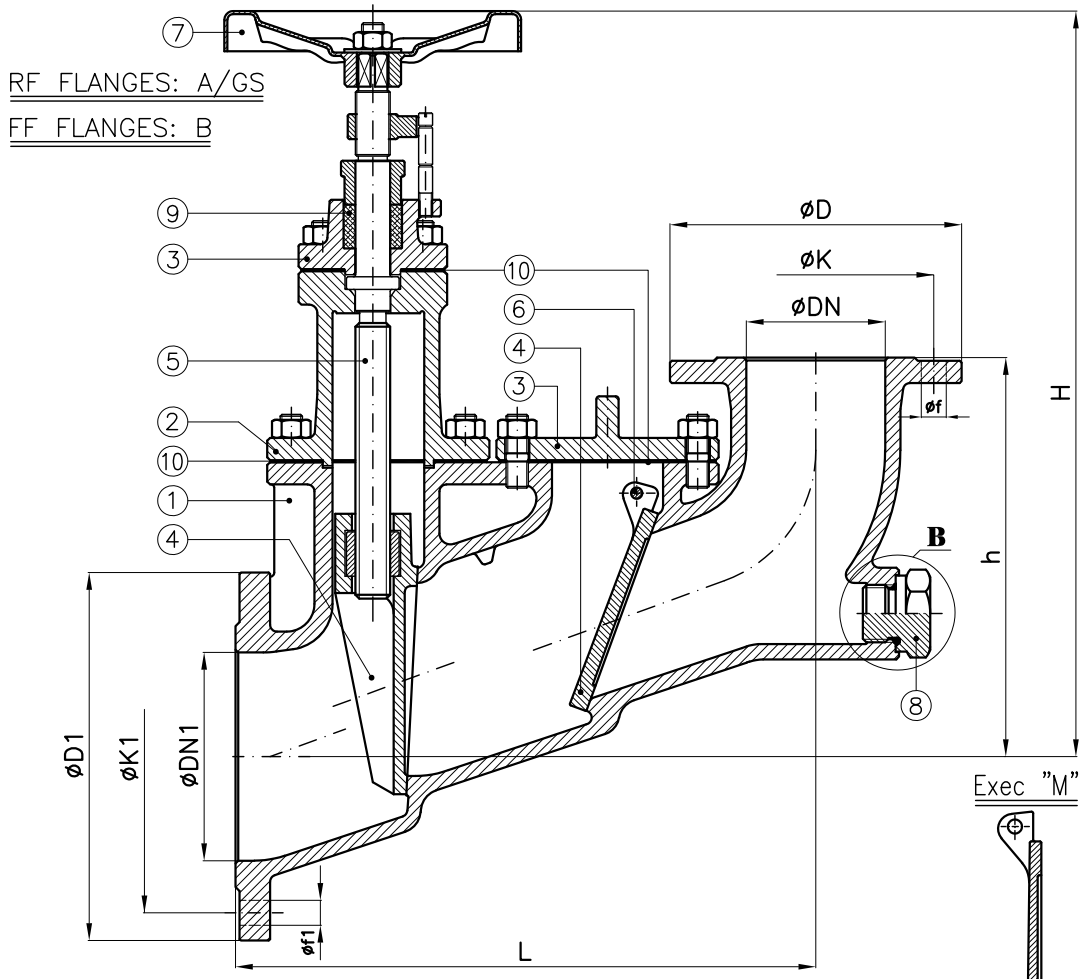

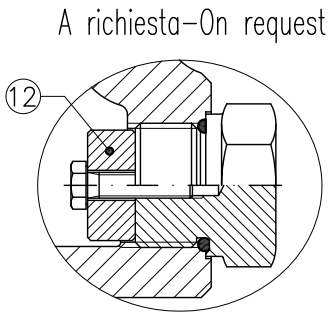

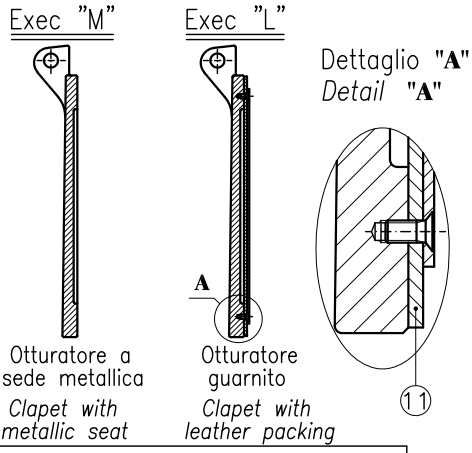

DN	DN1	L	H (~)	h (~)	D	K	f	Holes NO. f	D1	K1	f1	Holes NO. f1	Weight (Kg)
65	100	320	400	215	160	130	14	4	210	170	18	4	39
80	125	365	475	245	190	150	18	4	240	200	18	8	61
100	150	415	545	285	210	170	18	4	265	225	18	8	78
125	175	455	575	320	240	200	18	8	295	255	18	8	118
150	200	510	630	360	265	225	18	8	320	280	18	8	132

Combinazione materiali standard – Standard materials Combination						
		A/316	A/B	B/B	GS/316	GS/B
ITEM	DENOMINAZIONE DENOMINATION	MATERIALE MATERIAL	MATERIALE MATERIAL	MATERIALE MATERIAL	MATERIALE MATERIAL	MATERIALE MATERIAL
01	Body	Cast steel GP240-GH UNI EN10213	Cast steel GP240-GH UNI EN10213	Bronze UNI EN1982 G-CuSn5Zn5Pb5	Nodular cast iron EN-GJS-400-15U UNI EN1563	Nodular cast iron EN-GJS-400-15U UNI EN1563
02	Casing	Cast steel GP240-GH UNI EN10213	Cast steel GP240-GH UNI EN10213	Bronze UNI EN1982 G-CuSn5Zn5Pb5	Nodular cast iron EN-GJS-400-15U UNI EN1563	Nodular cast iron EN-GJS-400-15U UNI EN1563
03	Bonnet	Cast steel GP240-GH UNI EN10213	Cast steel GP240-GH UNI EN10213	Bronze UNI EN1982 G-CuSn5Zn5Pb5	Nodular cast iron EN-GJS-400-15U UNI EN1563	Nodular cast iron EN-GJS-400-15U UNI EN1563
04	Disc	Stainless steel AISI316 UNI EN10088	Bronze UNI EN1982 G-CuSn5Zn5Pb5	Bronze UNI EN1982 G-CuSn5Zn5Pb5	Stainless steel AISI316 UNI EN10088	Bronze UNI EN1982 G-CuSn5Zn5Pb5
05	Stem	Stainless steel AISI316 UNI EN10088	Brass CW617N (OT58)	Brass CW617N (OT58)	Stainless steel AISI316 UNI EN10088	Brass CW617N (OT58)
06	Pin	Stainless steel AISI316 UNI EN10088	Stainless steel AISI316 UNI EN10088	Stainless steel AISI316 UNI EN10088	Stainless steel AISI316 UNI EN10088	Stainless steel AISI316 UNI EN10088
07	Handwheel	Sheet of carbon steel	Sheet of carbon steel	Sheet of carbon steel	Sheet of carbon steel	Sheet of carbon steel
08	Plug	Brass CW617N (OT58)	Brass CW617N (OT58)	Brass CW617N (OT58)	Brass CW617N (OT58)	Brass CW617N (OT58)
09	Packing	Carbograph GR8800	Carbograph GR8800	Carbograph GR8800	Carbograph GR8800	Carbograph GR8800
10	Gasket	EPDM	EPDM	EPDM	EPDM	EPDM
11	Disc seat	Metallic/leather packing	Metallic/leather packing	Metallic/leather packing	Metallic/leather packing	Metallic/leather packing
12	Sacrificial anode (≥ND150)	ZINC	ZINC	ZINC	ZINC	ZINC

Nota: Combinazioni materiali non standard a richiesta
Note: Non standard materials combinations on request

Valvole di scarico fuori bordo serie ANSI150
Storm valves ANSI150

Tab.1223
Tab.1224

Conform to:
ANSI B16.10
ANSI B16.5

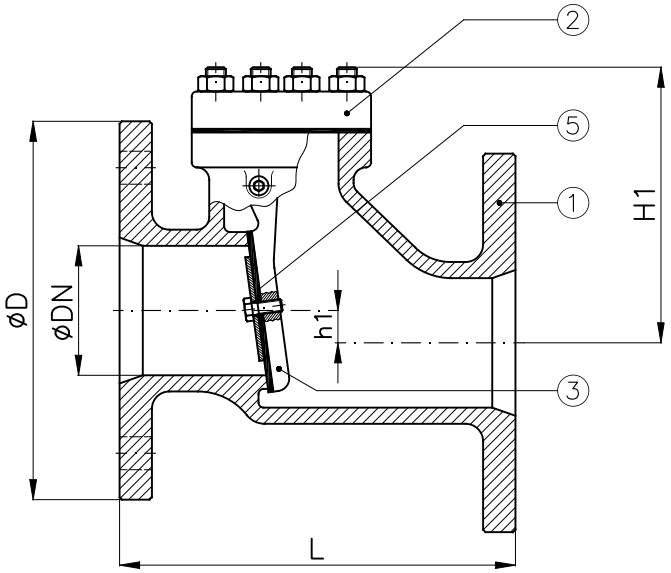

Tab.1223

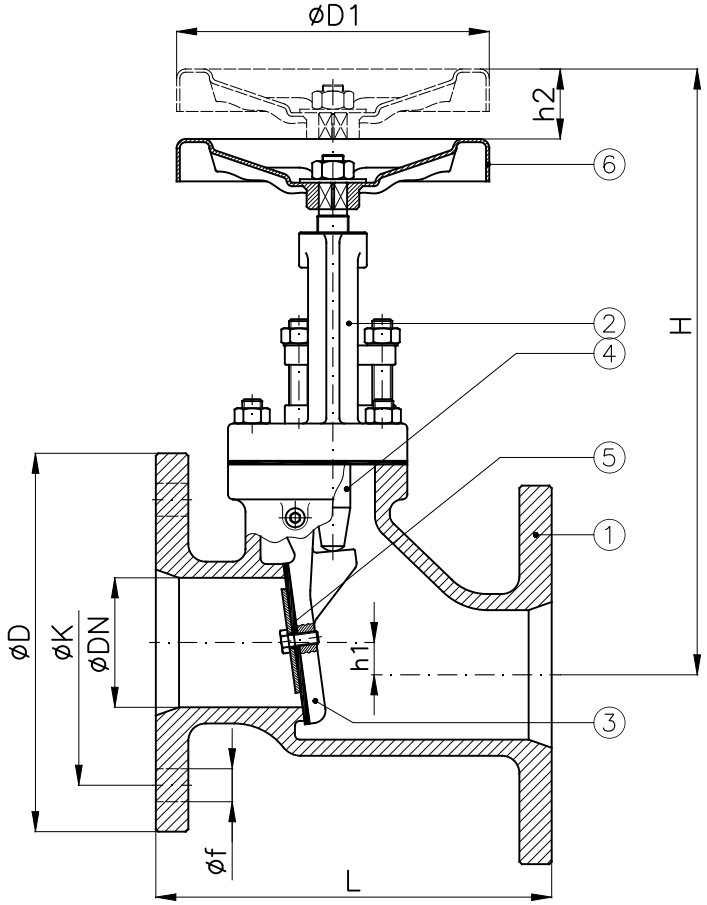

Tab.1224
With control

DN	D1	H	H1	h1	h2	L	D	K	f	Holes NO. f	Weight (Kg)
1"1/2	100	250	95	6.5	22	127.0	127	98	16	4	6.3
2"	100	275	115	12.7	32	158.75	152	121	19	4	8.3
2"1/2	100	305	135	12.7	35	177.8	178	140	19	4	16.6
3"	100	305	135	12.7	35	206.4	190	152	19	4	18.2
4"	150	360	175	15.9	40	266.7	229	191	19	8	40

Combinazione materiali standard – Standard materials Combination		
		B/B
ITEM	DENOMINAZIONE DENOMINATION	MATERIALE MATERIAL
01	Body	Bronze UNI EN1982 G-CuSn5Zn5Pb5
02	Cover	Bronze UNI EN1982 G-CuSn5Zn5Pb5
03	Disc	Bronze UNI EN1982 G-CuSn5Zn5Pb5
04	Stem	Brass CW617N (OT58)
05	Gasket	EPDM
06	Handwheel	Sheet of carbon steel
Nota: Combinazioni materiali non standard a richiesta Note: Non standard materials combinations on request		

DN100÷150

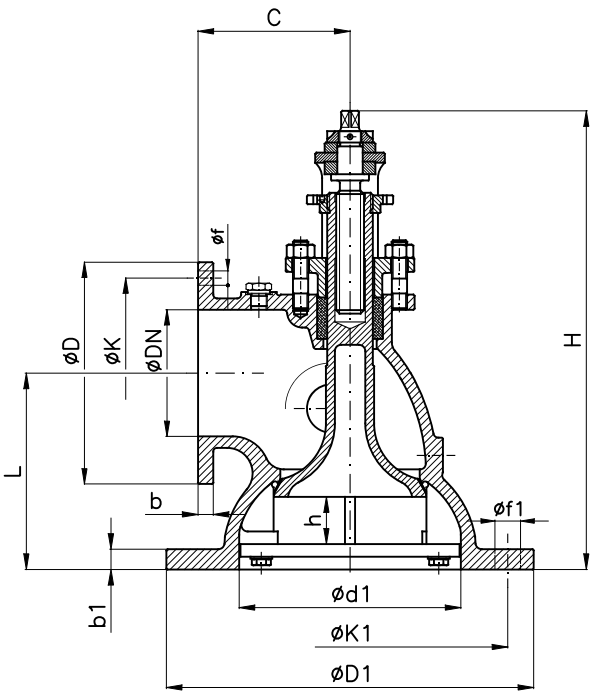

DN175÷500

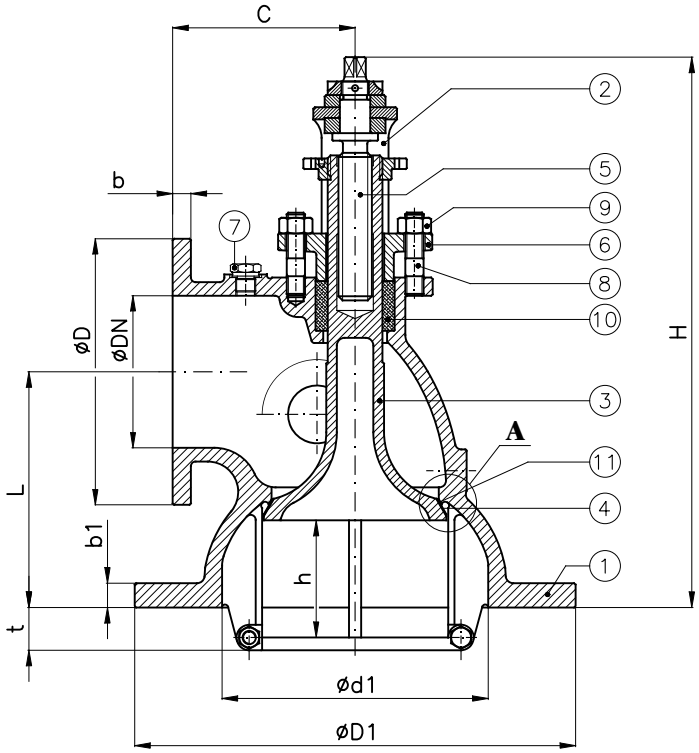

DN	b	b1	C	d1	H (~)	h	L	t	D	K	f	Holes NO. f	D1	K1	f1	Holes NO. f1	Weight (Kg)
100	12	16	120	175	370	40	155	–	175	150	14	8	290	260	18	12	26
125	12	18	140	215	440	50	182	–	200	175	14	12	330	300	18	12	38
150	12	18	155	250	460	58	180	23	230	205	14	12	368	338	18	12	45
175	16	18	180	300	500	68	197	34	270	240	18	12	424	394	18	16	63
200	18	18	195	330	560	76	215	41	295	265	18	12	454	424	18	16	76
250	18	20	230	410	650	94	250	65	350	320	18	20	550	510	23	16	
300	18	21	265	490	760	112	286	95	385	360	14	24	635	595	25	16	
350	18	22	295	565	830	128	318	110	435	410	14	20	710	670	25	20	
400	18	22	325	635	915	142	352	121	490	465	14	24	780	740	25	20	
450	18	23	345	700	1015	155	392	136	540	515	14	24	845	805	25	20	
500	18	23	365	750	1090	166	430	141	605	575	16	24	905	860	27	20	

Dettaglio **"A"**
Detail **"A"**

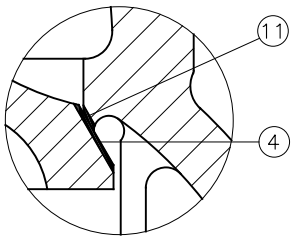

Combinazione materiali standard – Standard materials Combination							
		A/316	B/316			A/316	B/316
ITEM	DENOMINAZIONE DENOMINATION	MATERIALE MATERIAL	MATERIALE MATERIAL	ITEM	DENOMINAZIONE DENOMINATION	MATERIALE MATERIAL	MATERIALE MATERIAL
01	Body	Cast steel GP240-GH UNI EN10213	Bronze UNI EN1982 G-CuSn5Zn5Pb5	07	Plug	Brass CW617N (OT58)	Brass CW617N (OT58)
02	Stand	Cast steel GP240-GH UNI EN10213	Bronze UNI EN1982 G-CuSn5Zn5Pb5	08	Packing gland screw	Galvanized Steel 8.8 EN20898-1	Galvanized Steel 8.8 EN20898-1
03	Disc	Cast steel GP240-GH UNI EN10213 plus AISI316 facing welding	Bronze UNI EN1982 G-CuSn5Zn5Pb5	09	Packing gland nut	Galvanized Steel 8.8 EN20898-1	Galvanized Steel 8.8 EN20898-1
04	Disc seat	Stainless steel AISI316 UNI EN10088	Bronze UNI EN1982 G-CuSn5Zn5Pb5	10	Packing	Carbograph GR8800	Carbograph GR8800
05	Stem	Stainless steel AISI316 UNI EN10088	Stainless steel AISI316 UNI EN10088	11	Body seat	Stainless steel AISI316 UNI EN10088	Bronze UNI EN1982 G-CuSn5Zn5Pb5
06	Gland bushing	Bronze UNI EN1982 G-CuSn5Zn5Pb5	Bronze UNI EN1982 G-CuSn5Zn5Pb5				

Nota: Combinazioni materiali non standard a richiesta
Note: Non standard materials combinations on request

Valvole di presa e scarico a mare tipo Kingston UNAV8471 serie pesante PN6
Sea suction valves Kingston type UNAV8471 heavy class NP6

Tab.151

Conform to:
UNI EN1092

DN50÷150

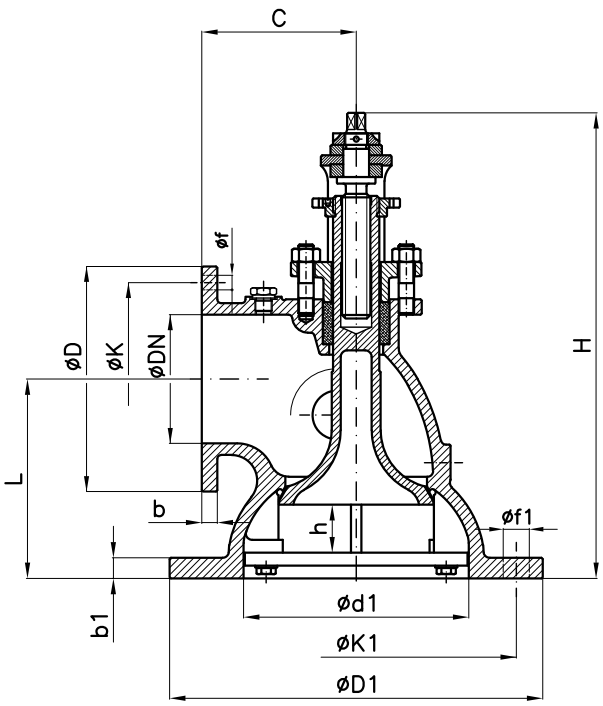

DN175÷500

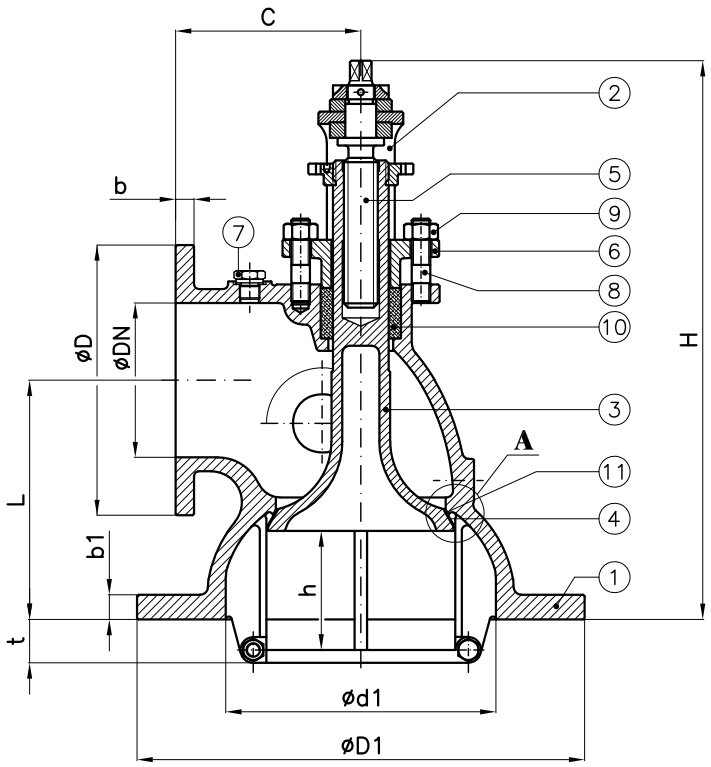

DN	b	b1	C	d1	H (~)	h	L	t	D	K	f	Holes NO. f	D1	K1	f1	Holes NO. f1	Weight (Kg)
50	12	18	108	100	255	28	105	–	140	110	14	4	210	170	18	4	13
65	14	18	122	125	285	31	118	–	160	130	14	4	240	200	18	8	16
80	14	20	135	150	320	35	132	–	190	150	18	4	265	225	18	8	20
100	16	20	150	175	370	40	155	–	210	170	18	4	295	255	18	8	29
125	16	20	175	225	440	50	182	–	240	200	18	8	345	305	18	8	38
150	18	20	190	250	460	58	180	23	265	225	18	8	375	335	18	12	52
175	18	22	225	300	500	68	197	34	295	255	18	8	440	395	22	12	61
200	18	22	235	325	560	76	215	41	320	280	18	8	465	420	22	12	90
250	20	22	285	425	650	94	250	65	375	335	18	12	565	520	22	16	119
300	20	24	325	500	760	113	286	85	440	395	22	12	645	600	22	20	198
350	20	24	355	550	830	128	318	110	490	445	22	12	705	655	25	20	210
400	20	24	410	650	915	142	352	121	540	495	22	16	810	760	25	20	342
450	20	26	435	700	1015	155	392	136	595	550	22	16	860	810	25	24	396
500	22	26	465	750	1090	166	430	141	645	600	22	20	920	865	29	24	452

Dettaglio **"A"**
Detail **"A"**

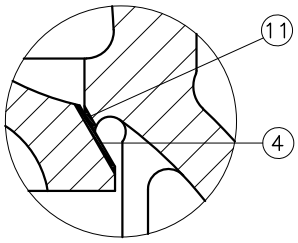

Combinazione materiali standard – Standard materials Combination							
		A/316	B/316			A/316	B/316
ITEM	DENOMINAZIONE DENOMINATION	MATERIALE MATERIAL	MATERIALE MATERIAL	ITEM	DENOMINAZIONE DENOMINATION	MATERIALE MATERIAL	MATERIALE MATERIAL
01	Body	Cast steel GP240-GH UNI EN10213	Bronze UNI EN1982 G-CuSn5Zn5Pb5	07	Plug	Brass CW617N (OT58)	Brass CW617N (OT58)
02	Stand	Cast steel GP240-GH UNI EN10213	Bronze UNI EN1982 G-CuSn5Zn5Pb5	08	Packing gland screw	Galvanized Steel 8.8 EN20898-1	Galvanized Steel 8.8 EN20898-1
03	Disc	Cast steel GP240-GH UNI EN10213 plus AISI316 facing welding	Bronze UNI EN1982 G-CuSn5Zn5Pb5	09	Packing gland nut	Galvanized Steel 8.8 EN20898-1	Galvanized Steel 8.8 EN20898-1
04	Disc seat	Stainless steel AISI316 UNI EN10088	Bronze UNI EN1982 G-CuSn5Zn5Pb5	10	Packing	Carbograph GR8800	Carbograph GR8800
05	Stem	Stainless steel AISI316 UNI EN10088	Stainless steel AISI316 UNI EN10088	11	Body seat	Stainless steel AISI316 UNI EN10088	Bronze UNI EN1982 G-CuSn5Zn5Pb5
06	Gland bushing	Bronze UNI EN1982 G-CuSn5Zn5Pb5	Bronze UNI EN1982 G-CuSn5Zn5Pb5				

Nota: Combinazioni materiali non standard a richiesta
Note: Non standard materials combinations on request

Autofiltri serie PN10 M.M.I. - PN16
Autofilters class NP10 M.M.I. - NP16

Tab.1115

Conform to:
UNI EN1092
UM584761

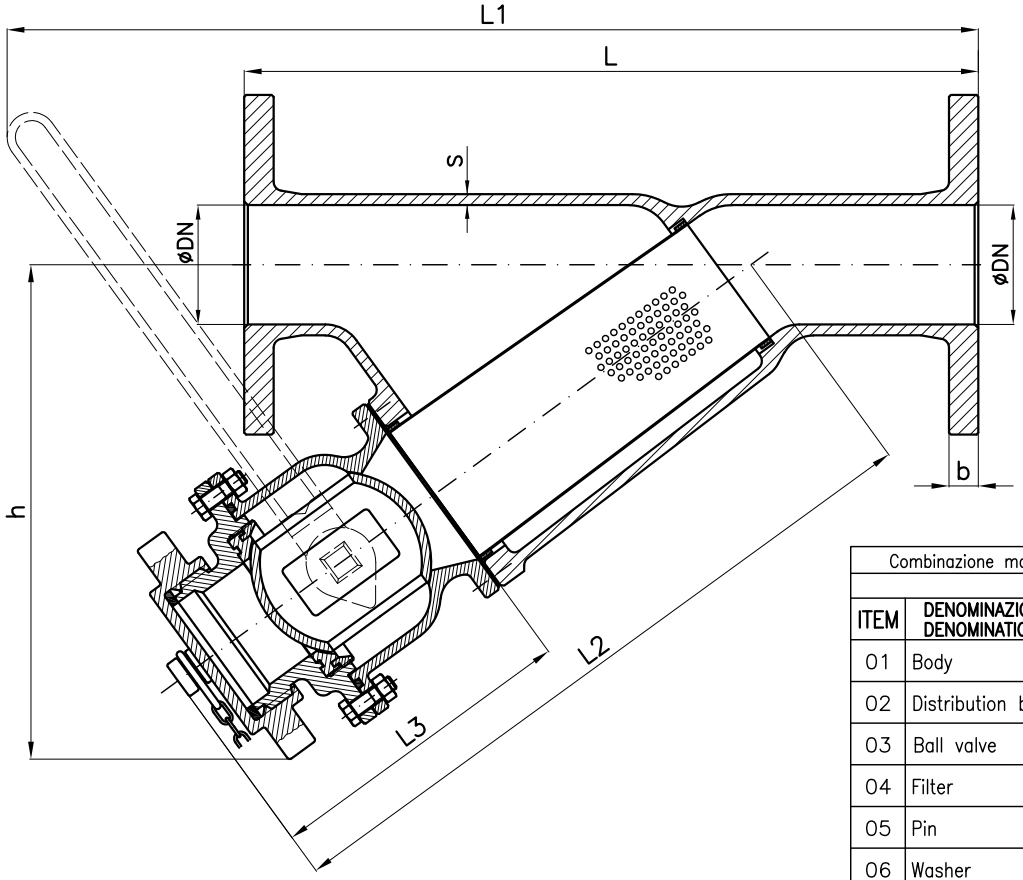

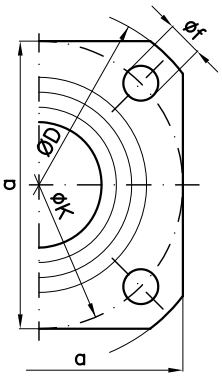

Flangia quadra
Square flange
PN10M.M.I.DN≤50

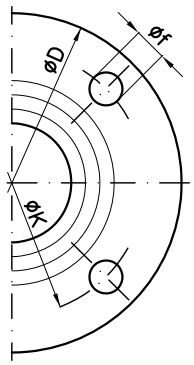

Flangia tonda
Round flange
PN10M.M.I. DN≥60
PN16 DN≥25

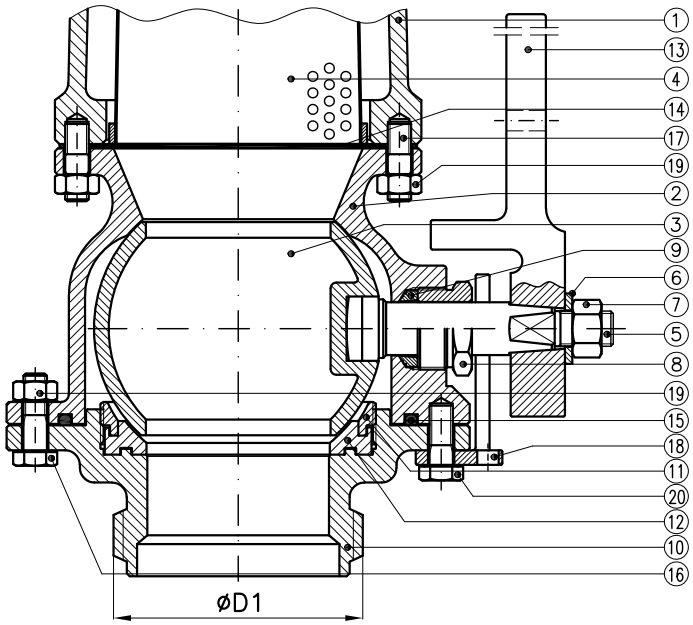

Combinazione materiali standard – Standard materials Combination			
		B/316	N/316
ITEM	DENOMINAZIONE DENOMINATION	MATERIALE MATERIAL	MATERIALE MATERIAL
01	Body	G–CuSn5Zn5Pb5 UNI EN1982	G–CuSn10Zn2Ni2 UNI EN1982
02	Distribution box	G–CuSn5Zn5Pb5 UNI EN1982	G–CuSn10Zn2Ni2 UNI EN1982
03	Ball valve	G–CuSn5Zn5Pb5 UNI EN1982	G–CuSn10Zn2Ni2 UNI EN1982
04	Filter	AISI316 UNI EN10088 X5CrNiMo17–12–2	AISI316 UNI EN10088 X5CrNiMo17–12–2
05	Pin	AISI316 UNI EN10088 X5CrNiMo17–12–2	AISI316 UNI EN10088 X5CrNiMo17–12–2
06	Washer	AISI316 UNI EN10088 X5CrNiMo17–12–2	AISI316 UNI EN10088 X5CrNiMo17–12–2
07	Nut M10x1.25	AISI316 UNI EN10088 X5CrNiMo17–12–2	AISI316 UNI EN10088 X5CrNiMo17–12–2
08	Gland bushing	Brass CW617N (OT58)	Brass CW617N (OT58)
09	Wiper seal	NBR	NBR
10	Bonnet	G–CuSn5Zn5Pb5 UNI EN1982	G–CuSn10Zn2Ni2 UNI EN1982
11	Bush	G–CuSn5Zn5Pb5 UNI EN1982	G–CuSn10Zn2Ni2 UNI EN1982
12	Valve gasket	NBR	NBR
13	Lever	G–CuSn5Zn5Pb5 UNI EN1982 or AISI316 UNI EN10088	G–CuSn10Zn2Ni2 UNI EN1982 or AISI316 UNI EN10088
14	Gasket	EPDM	EPDM
15	OR	NBR	NBR
16	Hexagonal head screw M8x25 UNI5739	AISI316 UNI EN10088 X5CrNiMo17–12–2	AISI316 UNI EN10088 X5CrNiMo17–12–2
17	Stud bolt M8x32 UNI5911	AISI316 UNI EN10088 X5CrNiMo17–12–2	AISI316 UNI EN10088 X5CrNiMo17–12–2
18	End–stroke plate	G–CuSn5Zn5Pb5 UNI EN1982	G–CuSn10Zn2Ni2 UNI EN1982
19	Nut M8 UNI5588	Brass CW617N (OT58)	Brass CW617N (OT58)
20	Hexagonal head screw M8x30 UNI5739	AISI316 UNI EN10088 X5CrNiMo17–12–2	AISI316 UNI EN10088 X5CrNiMo17–12–2
Nota: Note:	Combinazioni materiali non standard a richiesta Non standard materials combinations on request		

								PN10M.M.I.							PN16					
DN	D1	h	L	L1 (~)	L2 (~)	L3	S	a	b	D	K	f	Holes NO. f	Weight (Kg)	b	D	K	f	Holes NO. f	Weight (Kg)
25	M85x6	275	370	500	385	170	6	–	–	–	–	–	–	–	12	115	85	14	4	19
32	M85x6	275	370	500	385	170	6	–	–	–	–	–	–	–	12	140	100	18	4	19
40	M85x6	275	370	500	385	170	6	85	10	110	85	14	4	16	12	150	110	18	4	20
50	M85x6	280	400	535	390	170	6	95	10	120	95	14	4	17	16	165	125	18	4	21
60	M85x6	280	400	535	390	170	6	–	10	135	110	14	6	17.5	–	–	–	–	–	–
65	M85x6	280	400	535	390	170	6	–	–	–	–	–	–	–	16	185	145	18	4	22
65/70	M85x6	280	400	535	390	170	6	–	10	140	115	14	6	18	–	–	–	–	–	–
80	M85x6	270	430	580	440	170	8	–	10	155	130	14	8	27	18	200	160	18	8	31.5
100	M85x6	310	430	565	390	170	8	–	12	175	150	14	8	36	20	220	180	18	8	40
125	M85x6	315	450	565	390	170	10	–	16	200	175	14	12	40	20	250	210	18	8	46
150	M85x6	330	500	570	400	170	10	–	16	230	205	14	12	52	23	285	240	22	8	60
200	M85x6	410	600	660	540	170	14	–	18	295	265	18	12		26	340	295	22	12	122
250	M85x6	410	620	670	540	170	14	–	18	350	320	18	20		26	405	355	26	12	148

www.medanaevisca.it

Filtri a via diritta e ad angolo PN6-PN10DIN-PN16
Strainers straight and angle type NP6-NP10DIN-NP16

Tab.128FIL

Conform to:
UNI EN1092

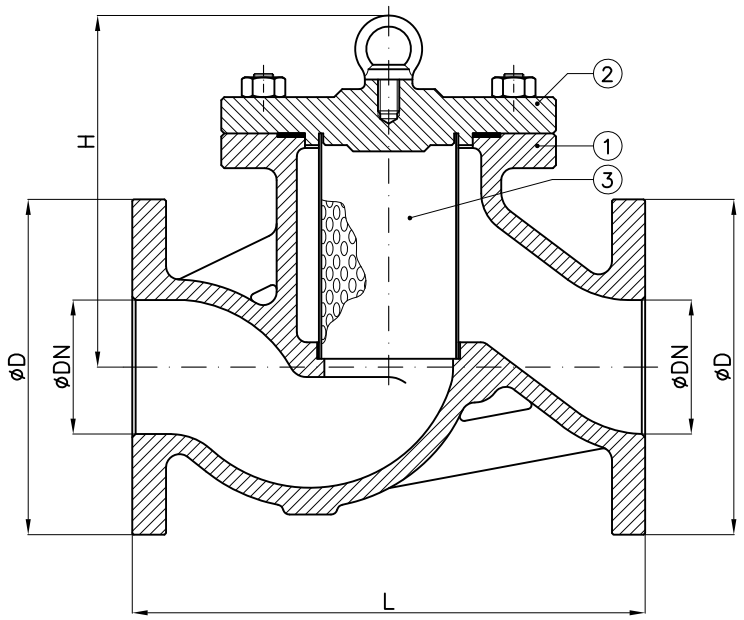

128FIL.1

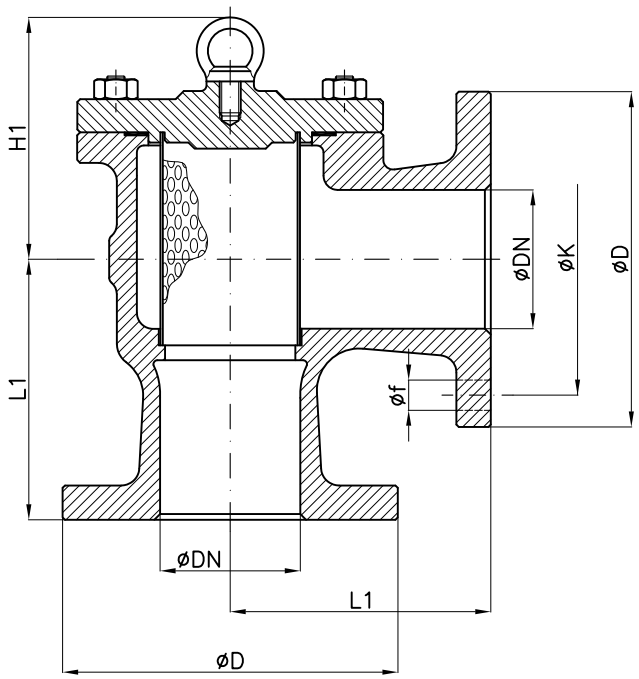

128FIL.2

DN	H (~) PN6-10-16	L PN6-10-16	Weight (Kg) 128FIL.1	H1 (~) PN6-10-16	L1 PN6	L1 PN10-16	Weight (Kg) 128FIL.2	PN6 D	PN6 K	PN6 f	PN6 Holes NO. f	PN10DIN D	PN10DIN K	PN10DIN f	PN10DIN Holes NO. f	PN16 D	PN16 K	PN16 f	PN16 Holes NO. f
15	130	150	6.5	115	70	85	6.5	80	55	11	4	95	65	14	4	95	65	14	4
20	135	150	6.5	115	70	85	6.5	90	65	11	4	105	75	14	4	105	75	14	4
25	135	160	8	115	75	90	8	100	75	11	4	115	85	14	4	115	85	14	4
32	155	180	10.5	125	80	105	9.5	120	90	14	4	140	100	18	4	140	100	18	4
40	155	200	12.5	125	95	115	10	130	100	14	4	150	110	18	4	150	110	18	4
50	155	230	16.5	125	100	125	16.5	140	110	14	4	165	125	18	4	165	125	18	4
65	180	290	26	140	120	145	26	160	130	14	4	185	145	18	4	185	145	18	4
80	185	310	31	145	130	155	31	190	150	18	4	200	160	18	8	200	160	18	8
100	220	350	40	165	150	175	39	210	170	18	4	220	180	18	8	220	180	18	8
125	245	400	60	175	175	200	58	240	200	18	8	250	210	18	8	250	210	18	8
150	265	480	79	185	200	225	78	265	225	18	8	285	240	22	8	285	240	22	8
175	290	550	109	195	230	250	108	295	255	18	8	315	270	22	8	315	270	22	8
200	310	600	133	210	250	275	132	320	280	18	8	340	295	22	8	340	295	22	12
250	375	730	199	260	300	325	195	375	335	18	12	395	350	22	12	405	355	26	12
300	425	850	295	290	350	375	292	440	395	22	12	445	400	22	12	460	410	26	12
350	495	980	388	350	400	400	370	490	445	22	12	505	460	22	16	520	470	26	16

Combinazione materiali standard – Standard materials Combination					
		A/316	B/316	G/316	GS/316
ITEM	DENOMINAZIONE DENOMINATION	MATERIALE MATERIAL	MATERIALE MATERIAL	MATERIALE MATERIAL	MATERIALE MATERIAL
01	Body	Cast steel GP240-GH UNI EN10213	Bronze UNI EN1982 G-CuSn5Zn5Pb5	Cast iron UNI EN1561 EN-GJL-250	Nodular cast iron EN-GJS-400-15U UNI EN1563
02	Cover	Cast steel GP240-GH UNI EN10213	Bronze UNI EN1982 G-CuSn5Zn5Pb5	Cast iron UNI EN1561 EN-GJL-250	Nodular cast iron EN-GJS-400-15U UNI EN1563
03	Strainer	Stainless steel AISI316 UNI EN10088	Stainless steel AISI316 UNI EN10088	Stainless steel AISI316 UNI EN10088	Stainless steel AISI316 UNI EN10088

Nota: Combinazioni materiali non standard a richiesta
Note: Non standard materials combinations on request

Casse fango PN6 - via diritta (UNAV8771-UNI3444)
Mud boxes NP6 - straight type (UNAV8771-UNI3444)

Tab.155

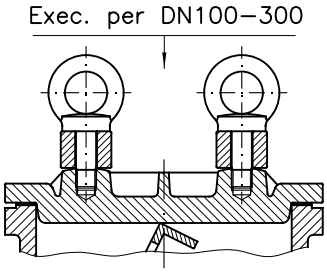

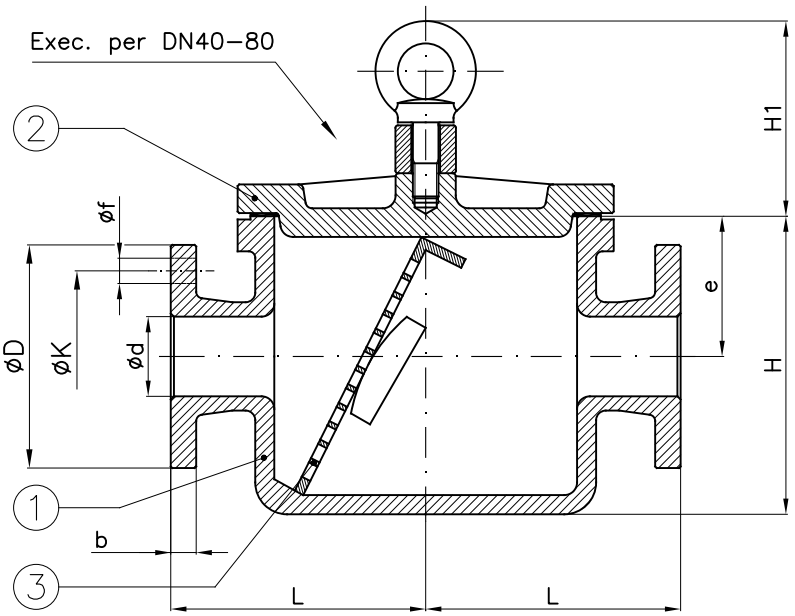

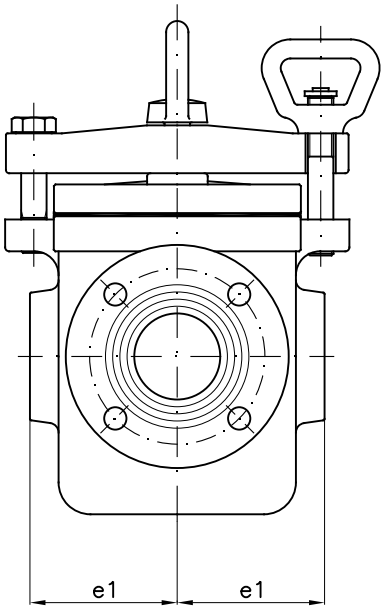

DN	b	d	e	e1	H	H1	L	D	K	f	n°fori f	Weight (Kg)
40	16	40	88	92	192	120	160	130	100	14	4	28
50	16	50	88	92	192	120	160	140	110	14	4	30
65	16	65	110	129	260	137	205	160	130	14	4	58
80	18	80	110	129	263	137	205	190	150	18	4	60
100	18	100	125	152.5	290	168	220	210	170	18	4	92
125	20	125	148	163	308	175	245	240	200	18	8	108
150	20	150	148	163	316	175	245	265	225	18	8	115
175	22	175	175	180	370	215	270	295	255	18	8	176
200	22	200	175	180	370	215	270	320	280	18	8	176
250	24	250	217	225	470	235	355	375	335	18	12	
300	24	300	217	225	470	235	355	440	395	22	12	

Combinazione materiali standard – Standard materials Combination			
		G/316	G/AZ
ITEM	DENOMINAZIONE DENOMINATION	MATERIALE MATERIAL	MATERIALE MATERIAL
01	Body	Cast iron UNI EN1561 EN–GJL–250	Cast iron UNI EN1561 EN–GJL–250
02	Cover	Cast iron UNI EN1561 EN–GJL–250	Cast iron UNI EN1561 EN–GJL–250
03	Strainer	Stainless steel AISI316 UNI EN10088	Galvanized steel Fe430 UNI EN10025
Nota: Combinazioni materiali non standard a richiesta Note: Non standard materials combinations on request			

Casse fango PN6 - angolo retto (UNAV8772-UNI3445)
Mud boxes NP6 - angle type (UNAV8772-UNI3445)

Tab.156

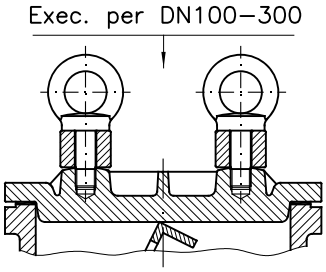

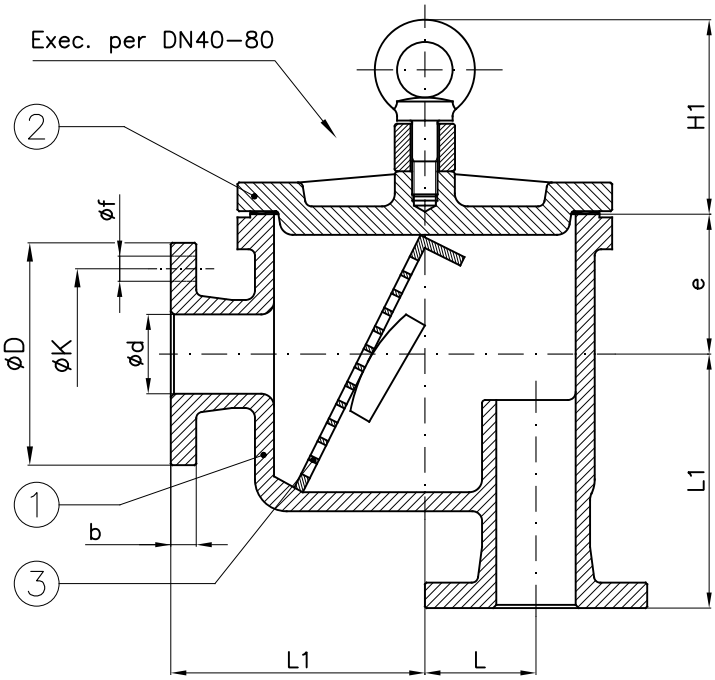

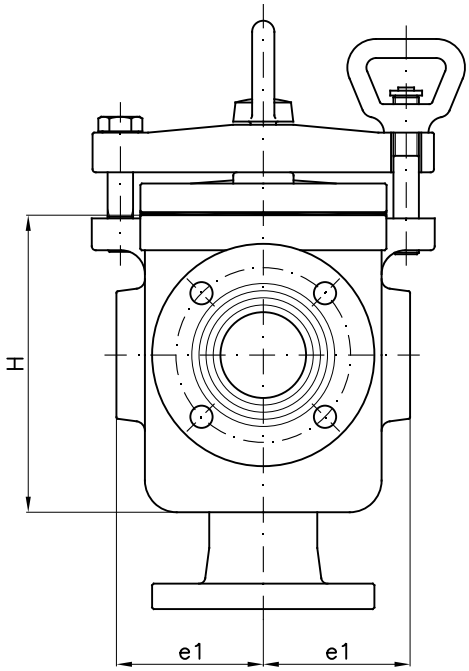

DN	b	d	e	e1	H	H1	L	L1	D	K	f	n°fori f	Weight (Kg)
40	16	40	88	92	192	120	70	160	130	100	14	4	28
50	16	50	88	92	192	120	70	160	140	110	14	4	30
65	16	65	110	129	260	137	95	205	160	130	14	4	58
80	18	80	110	129	263	137	95	205	190	150	18	4	60
100	18	100	125	152.5	290	168	100	220	210	170	18	4	92
125	20	125	148	163	308	175	90	245	240	200	18	8	108
150	20	150	148	163	316	175	90	245	265	225	18	8	115
175	22	175	175	180	370	215	70	270	295	255	18	8	176
200	22	200	175	180	370	215	70	270	320	280	18	8	176
250	24	250	217	225	470	235	100	355	375	335	18	12	
300	24	300	217	225	470	235	100	355	440	395	22	12	313

Combinazione materiali standard – Standard materials Combination			
		G/316	G/AZ
ITEM	DENOMINAZIONE DENOMINATION	MATERIALE MATERIAL	MATERIALE MATERIAL
01	Body	Cast iron UNI EN1561 EN–GJL–250	Cast iron UNI EN1561 EN–GJL–250
02	Cover	Cast iron UNI EN1561 EN–GJL–250	Cast iron UNI EN1561 EN–GJL–250
03	Strainer	Stainless steel AISI316 UNI EN10088	Galvanized steel Fe430 UNI EN10025
Nota: Combinazioni materiali non standard a richiesta Note: Non standard materials combinations on request			

Casse fango tipo esportazione PN6-10DIN-16 via diritta e angolo retto

Mud boxes export type NP6-10DIN-16 straight and angle type

Tab.158

Conform to:
UNI EN1092

DN40÷300

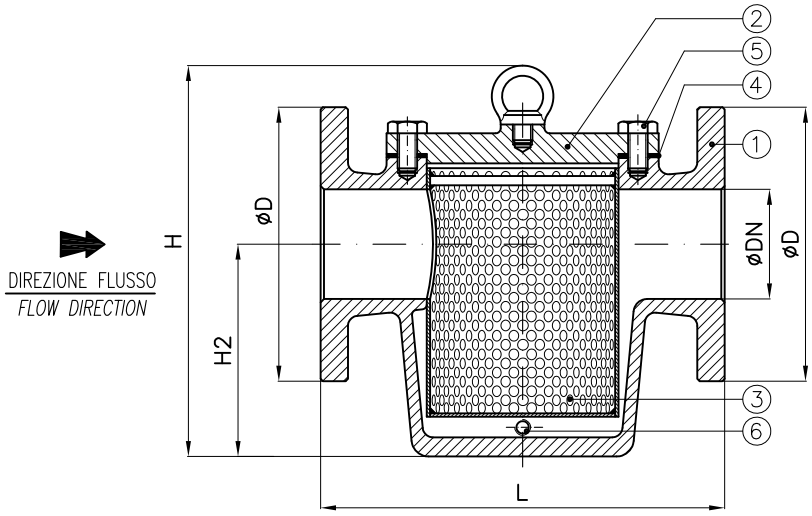

Exec.1 – Tab.158.1
Via diritta – Straight type

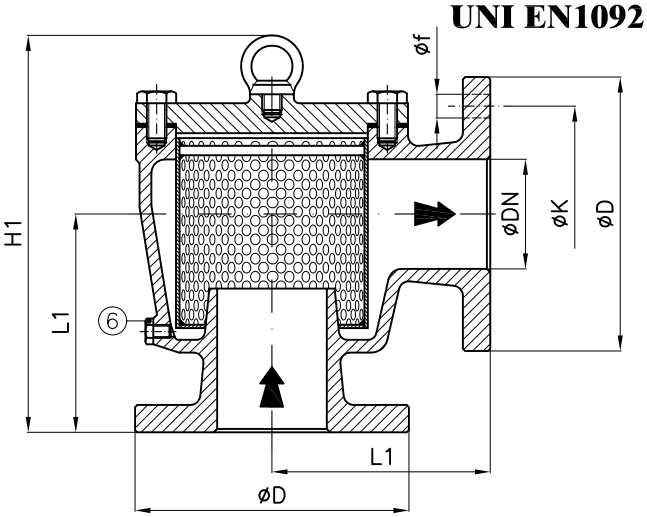

Exec.2 – Tab.158.2
Angolo retto – Angle type

DN350÷800

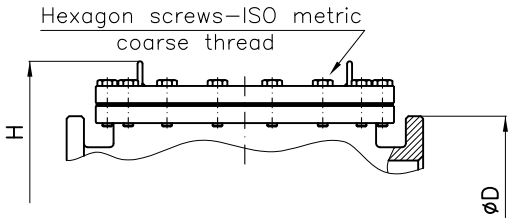

						EXEC.1	EXEC.2	PN6				PN10DIN				PN16			
DN	L	L1	H	H1	H2 (~)	Weight (Kg)	Weight (Kg)	D	K	f	Holes NO. f	D	K	f	Holes NO. f	D	K	f	Holes NO. f
40	200	135	230	270	95	12	11	130	100	14	4	150	110	18	4	150	110	18	4
50	230	135	240	270	110	16	15	140	110	14	4	165	125	18	4	165	125	18	4
65	290	150	305	345	140	28	29	160	130	14	4	185	145	18	4	185	145	18	4
80	310	175	305	355	160	31	31	190	150	18	4	200	160	18	8	200	160	18	8
100	350	195	365	380	185	44	43	210	170	18	4	220	180	18	8	220	180	18	8
125	400	220	450	445	235	71	65	240	200	18	8	250	210	18	8	250	210	18	8
150	480	270	505	490	265	96	87	265	225	18	8	285	240	22	8	285	240	22	8
175	550	300	540	540		122		295	255	18	8	315	270	22	8	315	270	22	8
200	600	300	590	565	335	155	139	320	280	18	8	340	295	22	8	340	295	22	12
250	730	–	705	–	390	281	–	375	335	18	12	395	350	22	12	405	355	26	12
300	780	–	800	–	455	362	–	440	396	22	12	445	400	22	12	460	410	26	12
350	740	–	960	–	565	402	–	490	445	22	12	505	460	22	16	520	470	26	16
400	740	–	960	–	565	450	–	540	495	22	16	565	515	26	16	580	525	30	16
500	900	–	1125	–	670	561	–	645	600	22	20	670	620	26	20	715	650	33	20
600	1000	–	1320	–	705	968	–	755	705	26	20	780	725	30	20	840	770	36	20
700	1200	–	1590	–	1000	1200	–	860	810	26	24	895	840	30	24	910	840	36	24
800	1400	–	1800	–	1150	1587	–	975	920	30	24	1015	950	33	24	1025	950	40	24

Combinazione materiali standard – Standard materials Combination					
		G/316	G/AZ	GS/316	GS/AZ
ITEM	DENOMINAZIONE DENOMINATION	MATERIALE MATERIAL	MATERIALE MATERIAL	MATERIALE MATERIAL	MATERIALE MATERIAL
01	Body	Cast iron UNI EN1561 EN-GJL-250	Cast iron UNI EN1561 EN-GJL-250	Nodular cast iron EN-GJS-400-15U UNI EN1563	Nodular cast iron EN-GJS-400-15U UNI EN1563
02	Bonnet	Cast iron UNI EN1561 EN-GJL-250	Cast iron UNI EN1561 EN-GJL-250	Nodular cast iron EN-GJS-400-15U UNI EN1563	Nodular cast iron EN-GJS-400-15U UNI EN1563
03	Strainer basket	Stainless steel AISI316 UNI EN10088	Galvanized steel	Stainless steel AISI316 UNI EN10088	Galvanized steel
04	Gasket	EPDM	EPDM	EPDM	EPDM
05	Screws	Galvanized Steel 8.8 EN20898-1	Galvanized Steel 8.8 EN20898-1	Galvanized Steel 8.8 EN20898-1	Galvanized Steel 8.8 EN20898-1
06	Plug	Brass CW617N (OT58)	Brass CW617N (OT58)	Brass CW617N (OT58)	Brass CW617N (OT58)

Nota: Combinazioni materiali non standard a richiesta
Note: Non standard materials combinations on request

Filtri navali UNAV9031.1-NI581310 - NI581410 PN6 - PN16

Naval strainers UNAV9031.1-NI581310 - NI581410 NP6 - NP16

Tab.159

Conform to:
UNI EN1092

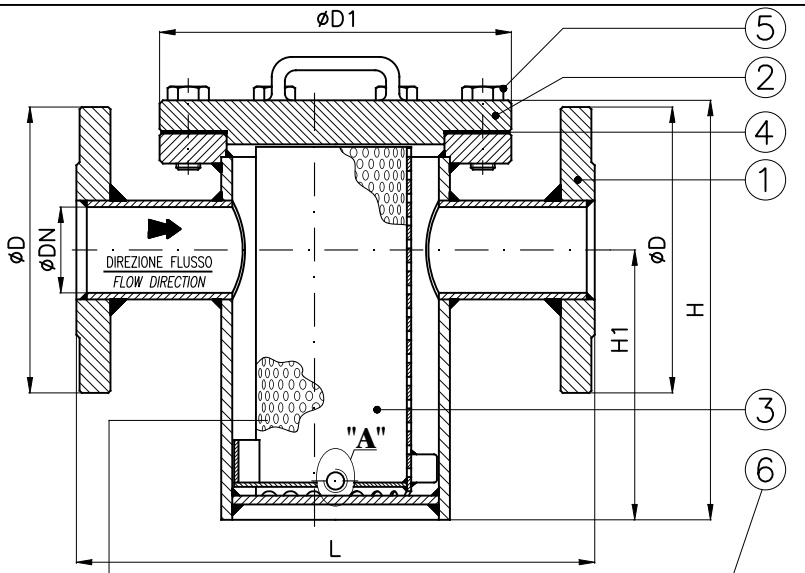

via diritta / straight type

UNAV 9031.1 (VD)
NI 581310

Foro filtraggio standard: 8mm.
Altre misure a richiesta

Standard filtering hole: 8mm.
Other filtering on request

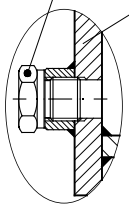

Dettaglio "A"
tappo di scarico

Detail "A"
drain plug

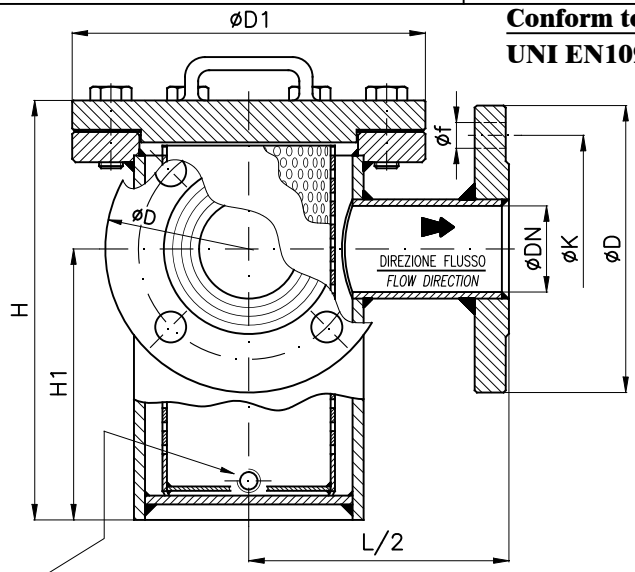

angolo retto / angle type

UNAV 9031.1 (AR)
NI 581410

Right type **Left type**

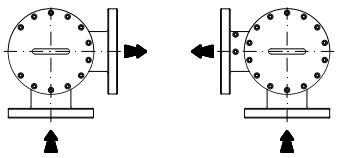

	UNAV 9031.1					NI581310					NI581410					PN6 – NP6				PN16 – NP16			
DN	D1	H (~)	H1	L	Weight (Kg)	D1	H (~)	H1	L	Weight (Kg)	D1	H (~)	H1	L/2	Weight (Kg)	D	K	f	Holes NO. f	D	K	f	Holes NO. f
20	115	120	66	160	4.8	–	–	–	–	–	–	–	–	–	–	90	65	11	4	105	75	14	4
25	115	120	66	160	6	–	–	–	–	–	–	–	–	–	–	100	75	11	4	115	85	14	4
32	125	140	77	180	7	–	–	–	–	–	–	–	–	–	–	120	90	14	4	140	100	18	4
40	150	160	92	200	10	–	–	–	–	–	–	–	–	–	–	130	100	14	4	150	110	18	4
50	165	185	115	230	14	165	185	78	260	14	165	185	78	115		140	110	14	4	165	125	18	4
65	195	230	145	250	16	195	230	118	290	16	195	230	118	125		160	130	14	4	185	145	18	4
80	255	300	195	320	29	255	300	170	330	32	255	300	170	160		190	150	18	4	200	160	18	8
100	285	350	230	360	39	285	350	195	375	39	285	350	195	180		210	170	18	4	220	180	18	8
125	345	425	275	430	57	345	425	255	450	57	345	425	255	215		240	200	18	8	250	210	18	8
150	400	500	340	490	89	400	500	300	510	80	400	500	300	245	77	265	225	18	8	285	240	22	8
175	490	565	360	550	131	490	565	325	580	127	490	565	325	275		295	255	18	8	315	270	22	8
200	540	635	430	620	169	540	635	350	650	169	540	635	350	310	150	320	280	18	8	340	295	22	12
250	595	785	555	700	214	595	710	350	705	185	595	710	350	350	222	375	335	18	12	405	355	26	12
300	645	785	400	710	260	645	785	400	710	257	645	785	400	355		440	395	22	12	460	410	26	12
350						705	860	400	750	290	755	860	400	375		490	445	22	12	520	470	26	16
400						755	885	460	820	407	810	895	460	410	474	540	495	22	16	580	525	30	16
450						810	970	500	890	621						595	550	22	16	640	585	30	20
500						860	1085	550	930	642						645	600	22	20	715	650	33	20
600						975	1250	600	1065							755	705	26	20	840	770	36	20
700						1050	1350	700	1200							860	810	26	24	910	840	36	24
800	1400	1500	850	1700	840											975	920	30	24	1025	950	39	24
1000																1175	1120	30	28	1255	1170	42	28

Combinazione materiali standard – Standard materials Combination					
		A/A	AZ/AZ	AZ/316	316/316
ITEM	DENOMINAZIONE DENOMINATION	MATERIALE MATERIAL	MATERIALE MATERIAL	MATERIALE MATERIAL	MATERIALE MATERIAL
01	Body	Steel Fe430B(S275JR) UNI EN10025	Galvanized steel Fe430B(S275JR)UNI EN10025	Galvanized steel Fe430B(S275JR)UNI EN10025	Stainless steel AISI316 UNI EN10088
02	Bonnet	Steel Fe430B(S275JR) UNI EN10025	Galvanized steel Fe430B(S275JR)UNI EN10025	Galvanized steel Fe430B(S275JR)UNI EN10025	Stainless steel AISI316 UNI EN10088
03	Strainer basket	Steel Fe430B(S275JR) UNI EN10025	Galvanized steel	Stainless steel AISI316 UNI EN10088	Stainless steel AISI316 UNI EN10088
04	Gasket	Planiflex KG carbo/C PF81	Planiflex KG carbo/C PF81	Planiflex KG carbo/C PF81	Planiflex KG carbo/C PF81
05	Screw	Galvanized Steel 8.8 EN20898-1	Galvanized Steel 8.8 EN20898-1	Galvanized Steel 8.8 EN20898-1	Stainless steel AISI316 (A4)
06	Plug	Brass CW617N (OT58)	Brass CW617N (OT58)	Brass CW617N (OT58)	Brass CW617N (OT58)

Nota: Combinazioni materiali non standard a richiesta
Note: Non standard materials combinations on request

Filtri navali a cestello / Casse fango PN6-16 Bronzo

Naval strainers / Mud boxes NP6-16 Bronze

Tab.159B

Conform to:
UNI EN1092

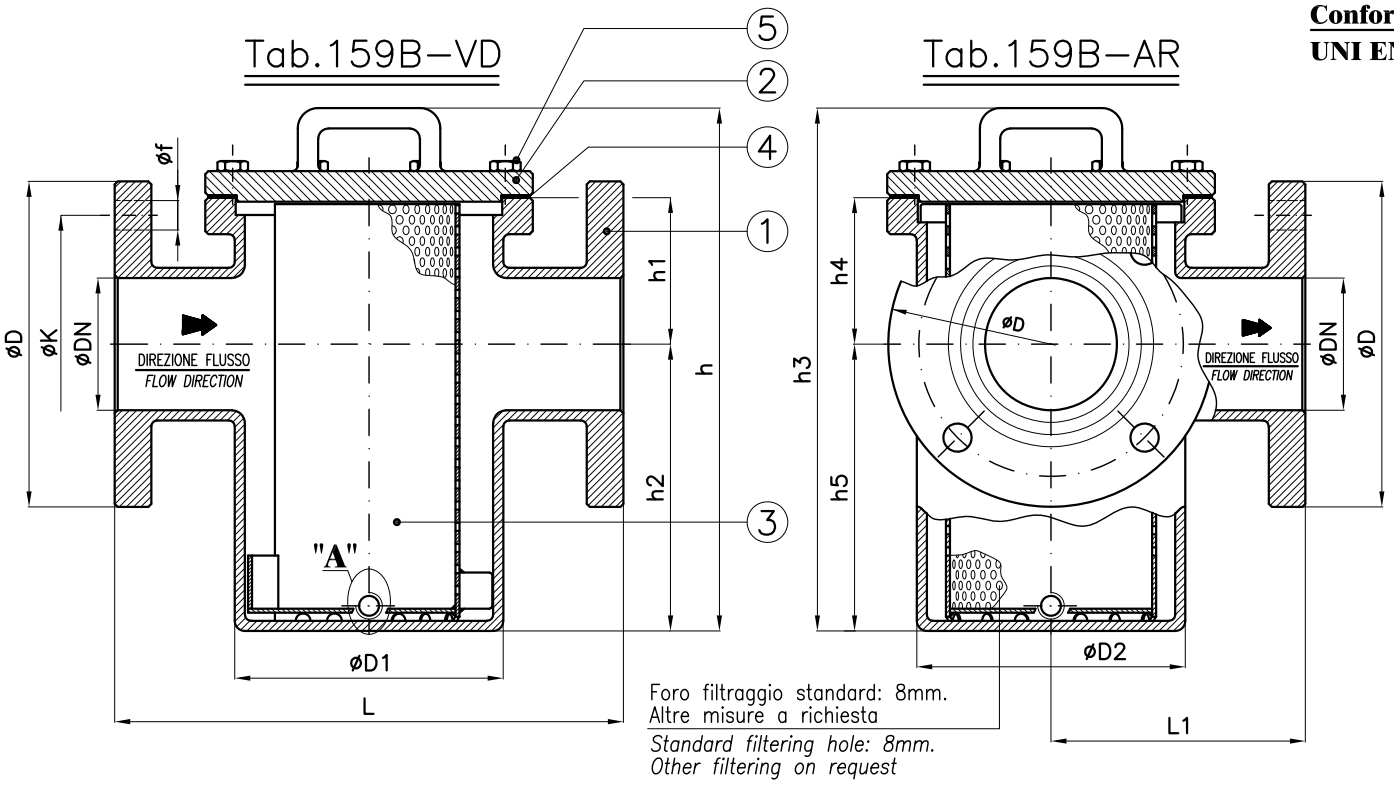

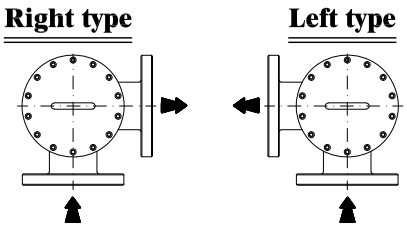

	VIA DIRITTA – STRAIGHT TYPE						ANGOLO RETTO – ANGLE TYPE						PN6–NP6				PN16–NP16			
DN	D1	h (~)	h1	h2 (~)	L	Weight (Kg)	D2	h3 (~)	h4	h5 (~)	L1	Weight (Kg)	D	K	f	Holes NO. f	D	K	f	Holes NO. f
32	105	195	60	95	200	12							120	90	14	4	140	100	18	4
40	105	195	60	95	200	12							130	100	14	4	150	110	18	4
50	120	225	66	120	230	15							140	110	14	4	165	125	18	4
65	135	255	71	145	250	18							160	130	14	4	185	145	18	4
80	170	350	117	165	320	32	165	345	87	191	160	28	190	150	18	4	200	160	18	8
100	210	405	112	235	360	43	190	385	99	224	180	36	210	170	18	4	220	180	18	8
125	260	485	179	235	400	63							240	200	18	8	250	210	18	8
150	305	560	143	340	490	100							265	225	18	8	285	240	22	8
175	305	560	143	340	490	107							295	255	18	8	315	270	22	8
200	400	685	178	435	620	171	295	550	164	308	250	120	320	280	18	8	340	295	22	12
250	410	695	183	440	620	188							375	335	18	12	405	355	26	12
300	420	700	233	380	700	230	515	710	235	390	350	288	440	395	22	12	460	410	26	12
350	560	960	258	562	740	441	–	–	–	–	–	–	490	445	22	12	520	470	26	16
400	560	960	258	562	740	504	–	–	–	–	–	–	540	495	22	16	580	525	30	16
500	680	1125	343	667	900	629	–	–	–	–	–	–	645	600	22	20	715	650	33	20
600	715	1320	452	703	1000	1085	–	–	–	–	–	–	755	705	26	20	840	770	36	20
700	910	1590	470	1000	1200	1345	–	–	–	–	–	–	860	810	26	24	910	840	36	24
800	1060	1800	500	1150	1400	1778	–	–	–	–	–	–	975	920	30	24	1025	950	39	24

Combinazione materiali standard – Standard materials Combination		
		B/316
ITEM	DENOMINAZIONE DENOMINATION	MATERIALE MATERIAL
01	Body	Bronze UNI EN1982 G-CuSn5Zn5Pb5
02	Bonnet	Bronze UNI EN1982 G-CuSn5Zn5Pb5
03	Strainer basket	Stainless steel AISI316 UNI EN10088
04	Gasket	EPDM
05	Screw	Stainless steel AISI316 (A4)
06	Plug	Brass CW617N (OT58)
Nota: Combinazioni materiali non standard a richiesta Note: Non standard materials combinations on request		

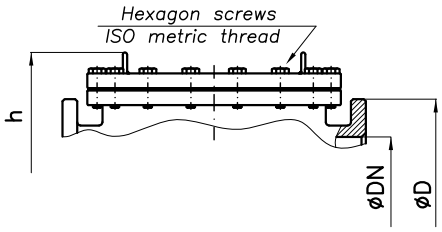

Dettaglio "**A**" tappo di scarico
*Detail "**A**" drain plug*

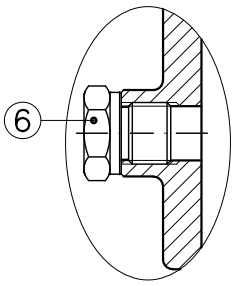

Filtri a "Y" PN10 M.M.I. - serie leggera Marina Militare Italiana
"Y" strainers NP10 M.M.I. - light class Italian Navy

Tab.160

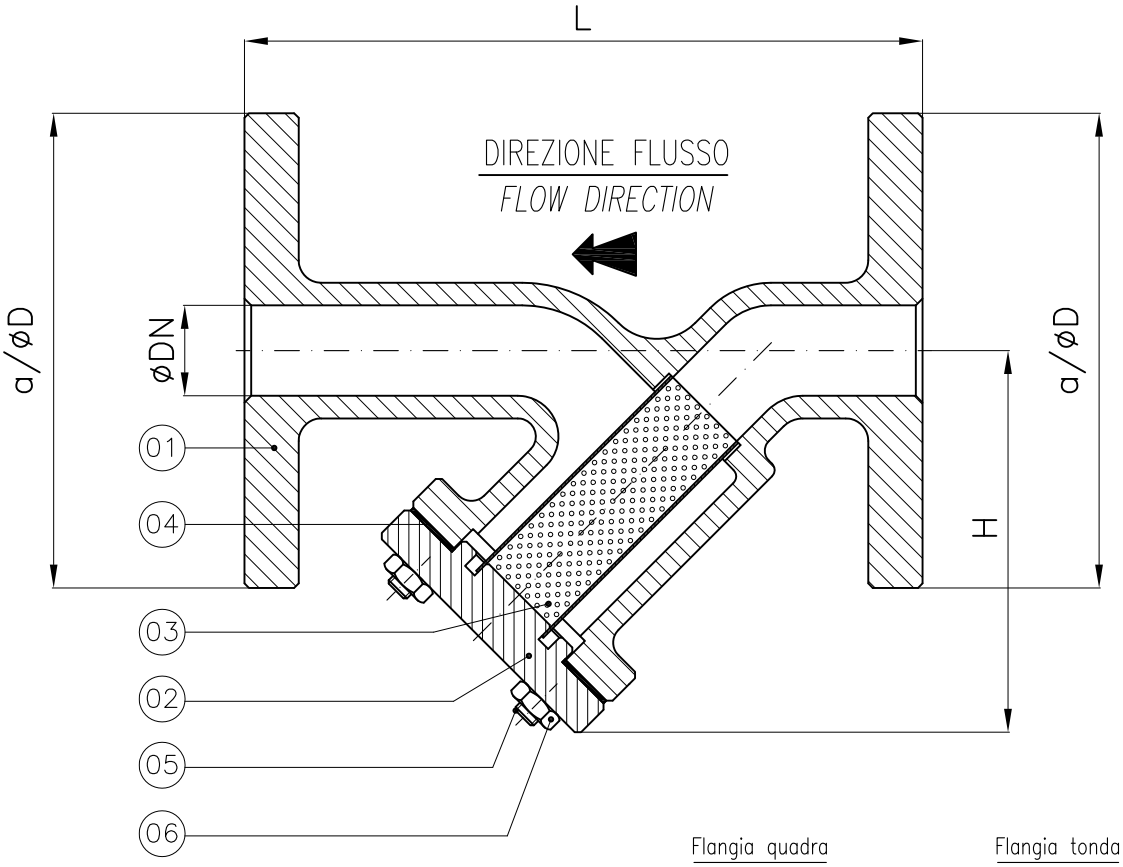

Flangia quadra
Square flange

Flangia tonda
Round flange

DN	a	H (~)	L	D	K	f	Holes NO. f	Weight (Kg)
20	72	100	155	90	65	14	4	3.2
25	78	100	160	95	70	14	4	4
32	82	120	170	100	75	14	4	6
40	85		200	110	85	14	4	6.5
50	95	155	235	120	95	14	4	9
70	–		295	140	115	14	6	16
80	–	205	310	155	130	14	8	18
100	–		335	175	150	14	8	20
125	–			200	175	14	12	
150	–		400	230	205	14	12	
200	–			295	265	18	12	
250	–			350	320	18	20	

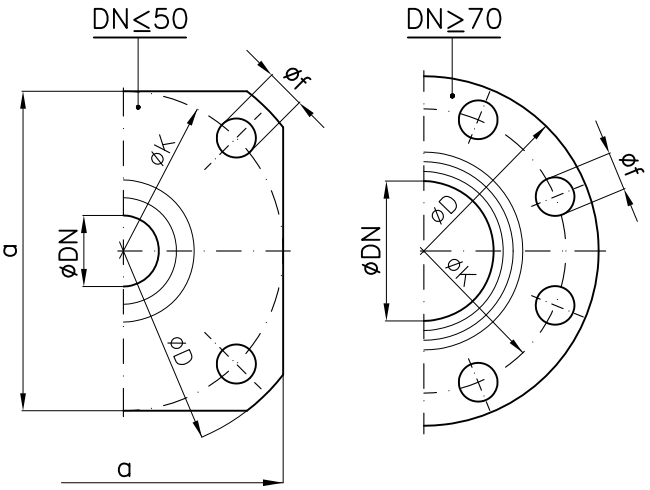

Combinazione materiali standard – Standard materials Combination				
		A/316	B/316	N/316
ITEM	DENOMINAZIONE DENOMINATION	MATERIALE MATERIAL	MATERIALE MATERIAL	MATERIALE MATERIAL
01	Body	Cast steel GP240-GH UNI EN10213	Bronze UNI EN1982 G-CuSn5Zn5Pb5	Bronze UNI EN1982 G-CuSn10Zn2Ni2
02	Bonnet	Cast steel GP240-GH UNI EN10213	Bronze UNI EN1982 G-CuSn5Zn5Pb5	Bronze UNI EN1982 G-CuSn10Zn2Ni2
03	Strainer basket	Stainless steel AISI316 UNI EN10088	Stainless steel AISI316 UNI EN10088	Stainless steel AISI316 UNI EN10088
04	Gasket	Planiflex KG carbo/C PF81	EPDM	EPDM
05	Bonnet stud bolt	Galvanized Steel 8.8 EN20898-1	Stainless Steel AISI304 (A2)	Stainless Steel AISI316 (A4)
06	Nut	Galvanized Steel 8.8 EN20898-1	Brass CW617N (OT58)	Stainless Steel AISI316 (A4)
Nota: Combinazioni materiali non standard a richiesta Note: Non standard materials combinations on request				

Filtri a "Y" PN6 - PN16 - PN40 - ANSI150

"Y" strainers NP16 - NP16 - NP40 - ANSI150

Tab.161

Conform to:
UNI EN1092
ANSI B16.5

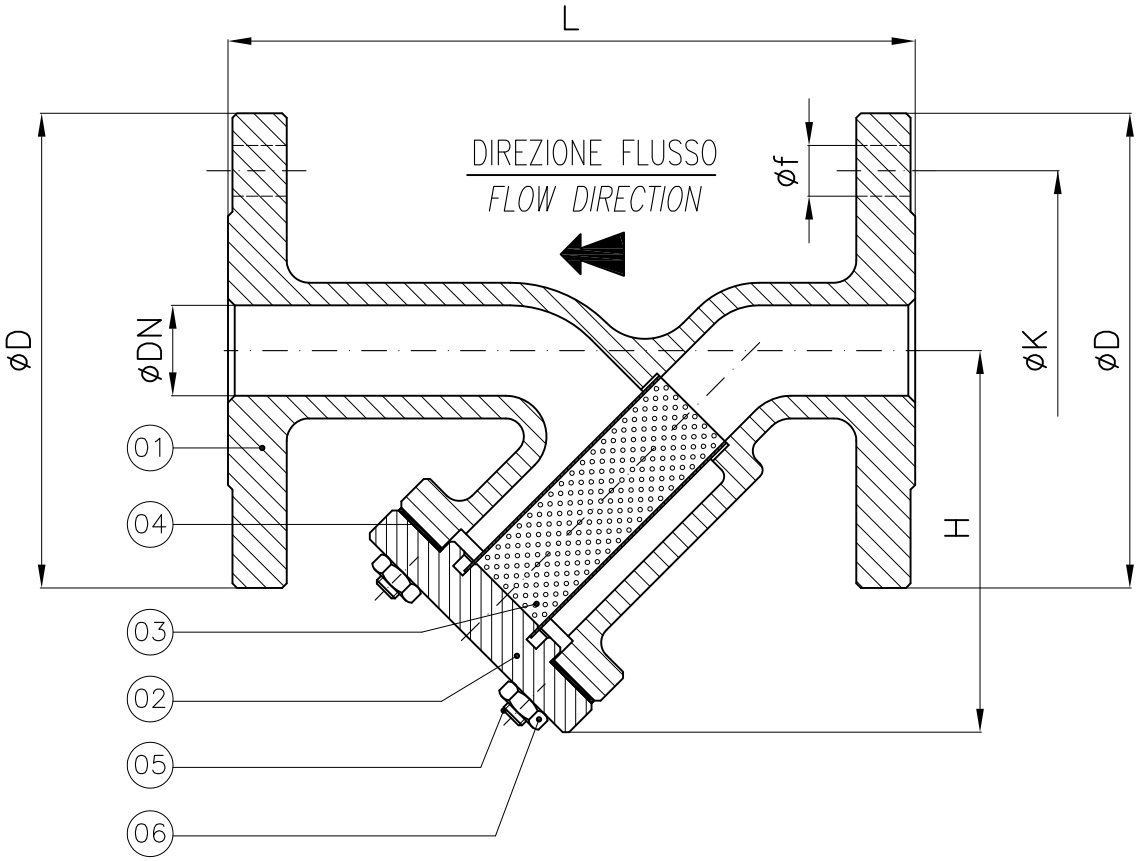

● : Per DN250 PN6/16/40/ANSI150 In Acciaio, AISI316, Ghisa, Ghisa sferoidale L=730mm

● : *For ND250 NP6/16/40/ANSI150 In Steel, Stainless steel, Cast iron, Nodular cast iron L=730mm*

∗ : Per DN20–25 PN6/16/40/ANSI150 In bronzo, L=180mm

∗ : *For ND20–25 NP6/16/40/ANSI150 In bronze, L=180mm*

					PN6				PN16				PN40				ANSI150			
DN	DN	H (~)	L PN6–16 PN40–ANSI150	Weight (Kg)	D	K	f	Holes NO. f	D	K	f	Holes NO. f	D	K	f	Holes NO. f	D	K	f	Holes NO. f
15	1/2”	85	130	5	80	55	11	4	95	65	14	4	95	65	14	4	88.9	60	16	4
*20	3/4”	100	150	6	90	65	11	4	105	75	14	4	105	75	14	4	98.4	70	16	4
*25	1”	100	160	6	100	75	11	4	115	85	14	4	115	85	14	4	108	79	16	4
32	1”1/4	120	180	7	120	90	14	4	140	100	18	4	140	100	18	4	118	89	16	4
40	1”1/2	140	200	10	130	100	14	4	150	110	18	4	150	110	18	4	127	98	16	4
50	2”	155	230	10	140	110	14	4	165	125	18	4	165	125	18	4	152	121	19	4
65	2”1/2	195	290	16	160	130	14	4	185	145	18	4	185	145	18	8	178	140	19	4
80	3”	205	310	20	190	150	18	4	200	160	18	8	200	160	18	8	190	152	19	4
100	4”	245	350	30	210	170	18	4	220	180	18	8	235	190	22	8	229	191	19	8
125	5”	295	400	50	240	200	18	8	250	210	18	8	270	220	26	8	254	216	22	8
150	6”	325	480	62	265	225	18	8	285	240	22	8	300	250	26	8	279	241	22	8
200	8”	420	600	122	320	280	18	8	340	295	22	12	375	320	30	12	343	298	22	8
●250	10”	460	620	170	375	335	18	12	405	355	26	12	450	385	33	12	406	362	25	12

Combinazione materiali standard – Standard materials Combination					
		A/316	B/316	G/316	GS/316
ITEM	DENOMINAZIONE DENOMINATION	MATERIALE MATERIAL	MATERIALE MATERIAL	MATERIALE MATERIAL	MATERIALE MATERIAL
01	Body	Cast steel GP240–GH UNI EN10213	Bronze UNI EN1982 G–CuSn5Zn5Pb5	Cast iron UNI EN1561 EN–GJL–250	Nodular cast iron EN–GJS–400–15U UNI EN1563
02	Bonnet	Cast steel GP240–GH UNI EN10213	Bronze UNI EN1982 G–CuSn5Zn5Pb5	Cast iron UNI EN1561 EN–GJL–250	Nodular cast iron EN–GJS–400–15U UNI EN1563
03	Strainer basket	Stainless steel AISI316 UNI EN10088	Stainless steel AISI316 UNI EN10088	Stainless steel AISI316 UNI EN10088	Stainless steel AISI316 UNI EN10088
04	Gasket	Planiflex KG carbo/C PF81	EPDM	Planiflex KG carbo/C PF81	Planiflex KG carbo/C PF81
05	Bonnet stud bolt	Galvanized Steel 8.8 EN20898–1	Stainless Steel AISI304 (A2)	Galvanized Steel 8.8 EN20898–1	Galvanized Steel 8.8 EN20898–1
06	Nut	Galvanized Steel 8.8 EN20898–1	Brass CW617N (OT58)	Galvanized Steel 8.8 EN20898–1	Galvanized Steel 8.8 EN20898–1

Nota: Combinazioni materiali non standard a richiesta
Note: Non standard materials combinations on request

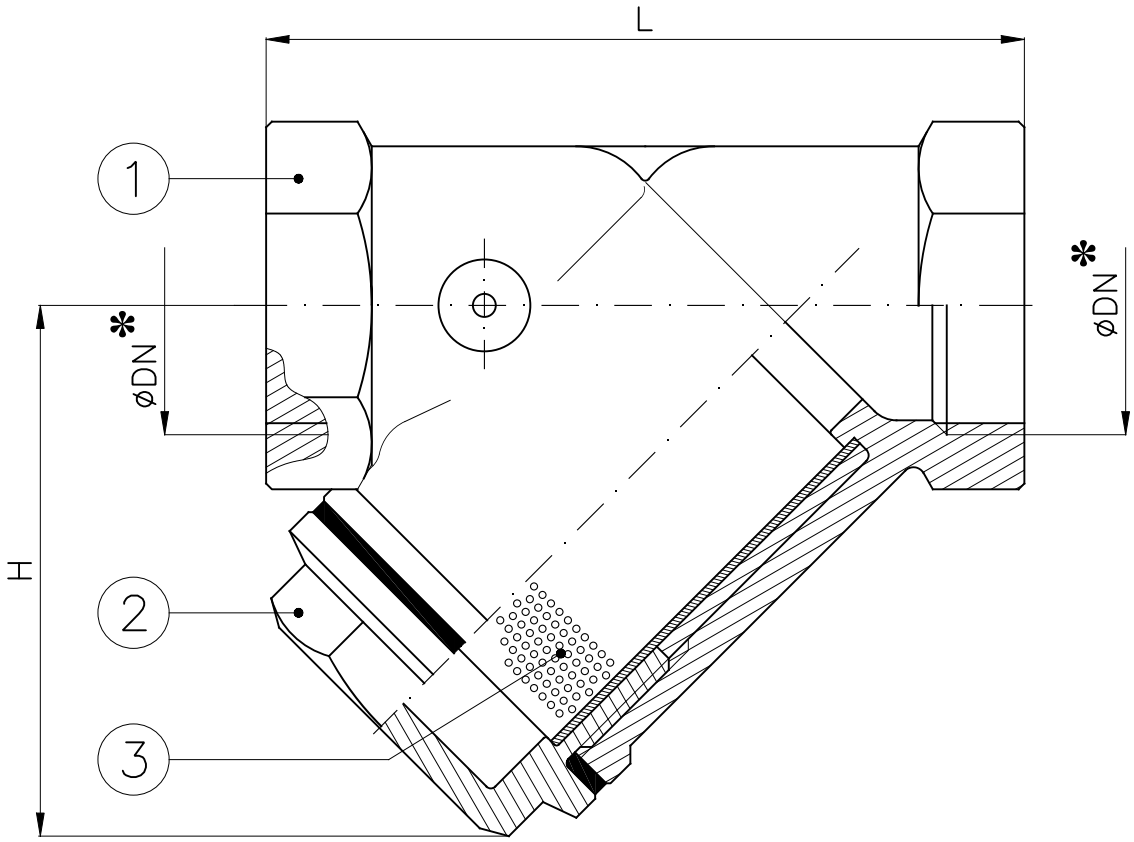

✻: Filettatura GAS
✻: *BSPP threaded*

DN	H	L	Weight (Kg)
3/8"	40	55	0.19
1/2"	40	58	0.24
3/4"	50	70	0.35
1"	60	87	0.48
1"1/4	68	96	0.83
1"1/2	75	106	0.94
2"	90	126	1.5
2"1/2	100	145	2.4
3"	118	165	3.7
4"	170	215	6.7

Combinazione materiali standard – Standard materials Combination		
		B/316
ITEM	DENOMINAZIONE DENOMINATION	MATERIALE MATERIAL
01	Body	Bronze UNI EN1982 G-CuSn5Zn5Pb5
02	Bonnet	Brass CW617N (OT58)
03	Strainer basket	Stainless steel AISI316 UNI EN10088
Nota: Combinazioni materiali non standard a richiesta Note: Non standard materials combinations on request		

Filtri "Y" con coperchio avvitato classe 800-1500-2500
"Y" strainers screwed cover class 800-1500-2500

Art.12FOR

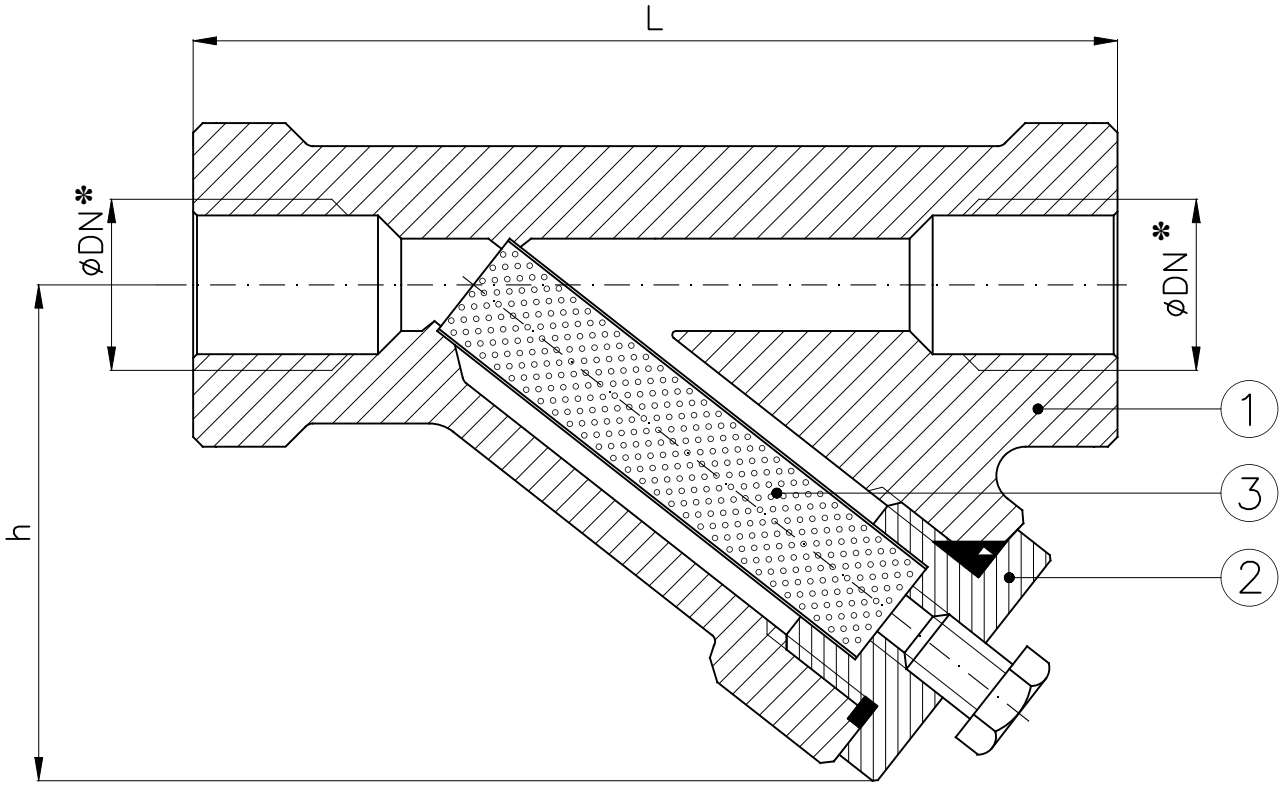

*: Filettatura GAS
*: BSPP threaded

	Classe 800 Class 800			Classe 1500 Class 1500			Classe 2500 Class 2500		
DN	L	h (~)	Weight (Kg)	L	h (~)	Weight (Kg)	L	h (~)	Weight (Kg)
1/4"	90	60	1	110	75		–	–	–
3/8"	90	60	1	110	75		–	–	–
1/2"	90	60	1	110	75		110	75	
3/4"	110	75	1.3	130	93		130	93	
1"	130	93	2	160	120		160	120	
1"1/4	160	120	5.5	–	–	–	–	–	–
1"1/2	160	120	5.5	–	–	–	–	–	–

Combinazione materiali standard – Standard materials Combination				
		A/304	A/316	CF8M/316
ITEM	DENOMINAZIONE DENOMINATION	MATERIALE MATERIAL	MATERIALE MATERIAL	MATERIALE MATERIAL
01	Body	Forged steel ASTM A105N	Forged steel ASTM A105N	Stainless steel CF8M ASTM A351
02	Bonnet	Stainless steel AISI304 UNI EN10088	Stainless steel AISI316 UNI EN10088	Stainless steel AISI316 UNI EN10088
03	Strainer basket	Stainless steel AISI304 UNI EN10088	Stainless steel AISI316 UNI EN10088	Stainless steel AISI316 UNI EN10088

Nota: Combinazioni materiali non standard a richiesta
Note: Non standard materials combinations on request

Conform to:
UNI EN1092

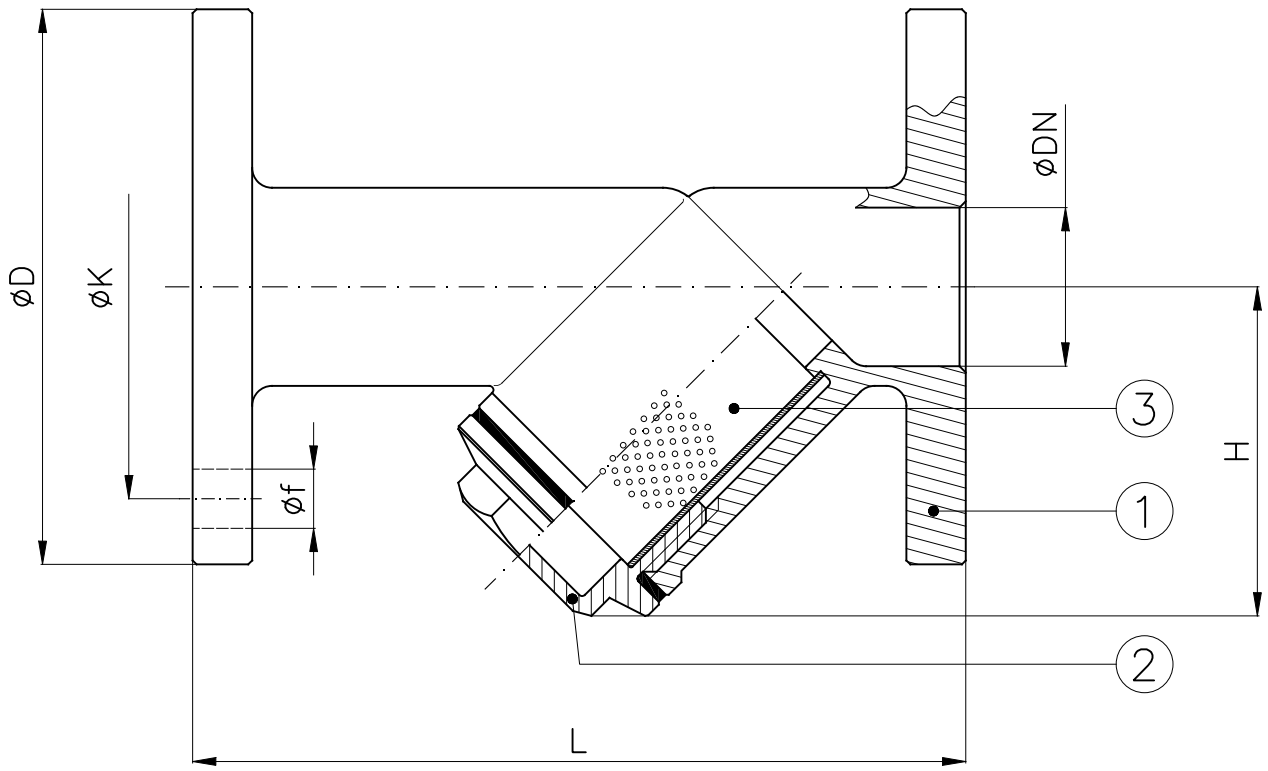

DN	H	L	D	K	f	Holes NO. f	Weight (Kg)
15	45	100	95	65	14	4	1.7
20	55	115	105	75	14	4	2
25	60	140	115	85	14	4	2.5
32	70	145	140	100	18	4	4.2
40	85	170	150	110	18	4	5.2
50	95	185	165	125	18	4	6.8
65	115	205	185	145	18	4	8.8
80	130	220	200	160	18	8	10.5
100	155	254	220	180	18	8	14

Combinazione materiali standard – Standard materials Combination		
		B/316
ITEM	DENOMINAZIONE DENOMINATION	MATERIALE MATERIAL
01	Body	Bronze UNI EN1982 G-CuSn5Zn5Pb5
02	Bonnet	Brass CW617N (OT58)
03	Strainer basket	Stainless steel AISI316 UNI EN10088
Nota: Combinazioni materiali non standard a richiesta Note: Non standard materials combinations on request		

Filtri a "Y" PN40 in acciaio inox AISI316
"Y" strainers NP40 stainless steel AISI316

Art.2049

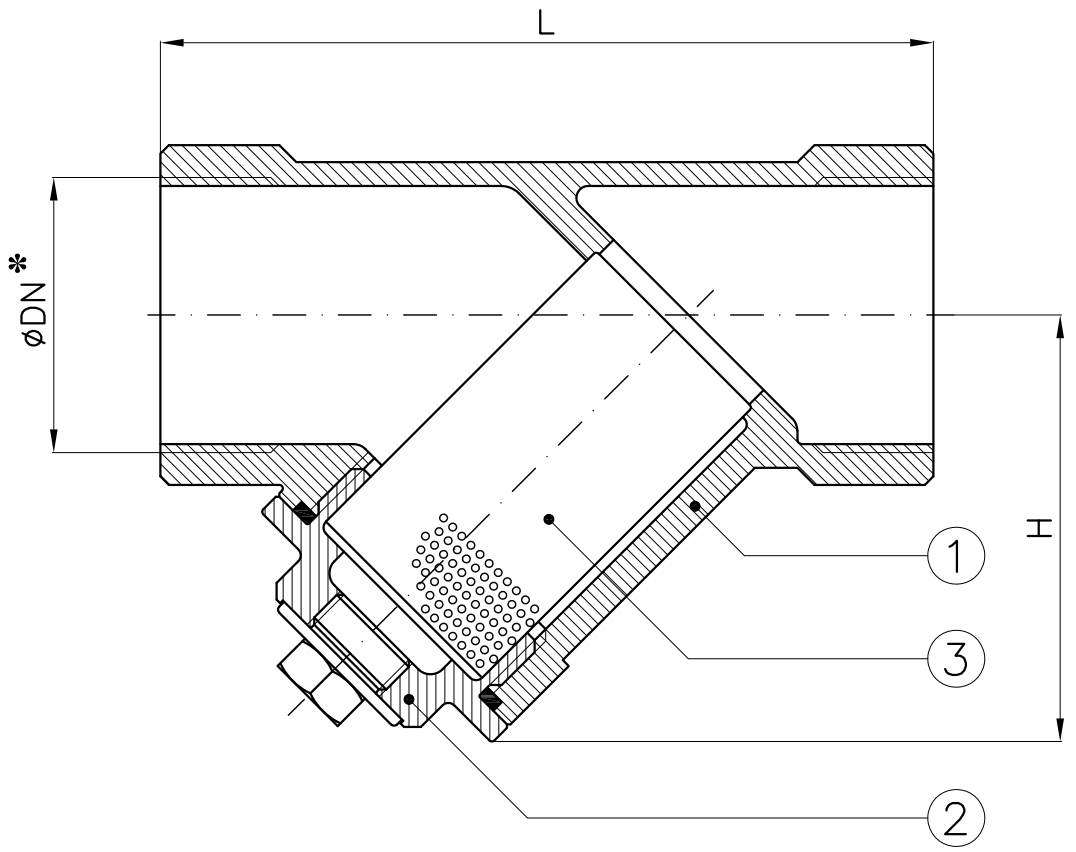

✻ : Filettatura GAS

✻ : *BSPP threaded*

DN	1/4"	3/8"	1/2"	3/4"	1"	1"1/4	1"1/2	2"	2"1/2	3"
H	30	30	34	39	42	50	57	70	91	110
L	57	57	61	70	86	100	111	138	165	196
L(MG)	65	65	65	80	90	105	120	140	–	–

Combinazione materiali standard – Standard materials Combination		
		CF8M/316
ITEM	DENOMINAZIONE DENOMINATION	MATERIALE MATERIAL
01	Body	Stainless steel CF8M ASTM A351
02	Bonnet	Stainless steel CF8M ASTM A351
03	Strainer	Stainless steel AISI316 UNI EN10088
Nota: Combinazioni materiali non standard a richiesta Note: Non standard materials combinations on request		

Pigne di fondo - tipo chiuso e tipo aperto
Suction valves - closed and open type

Tab.162

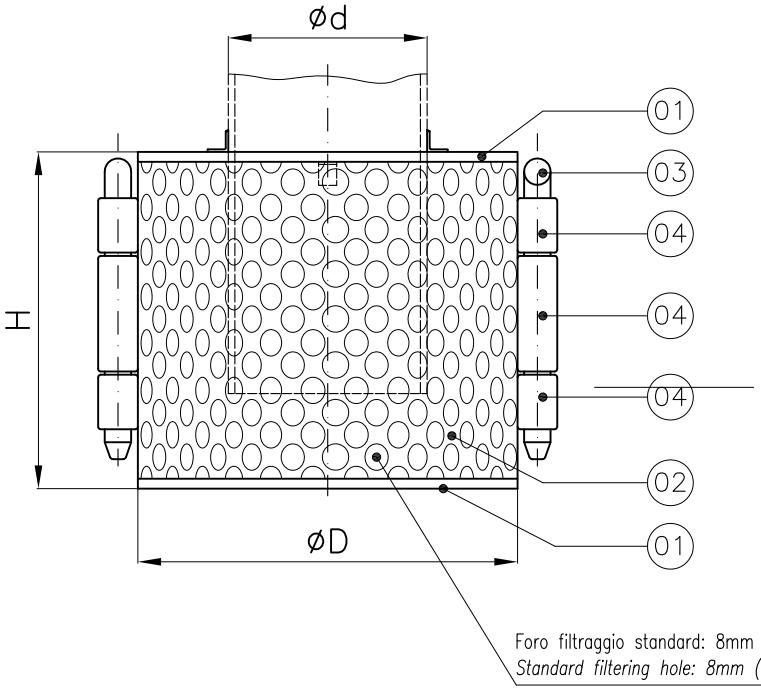

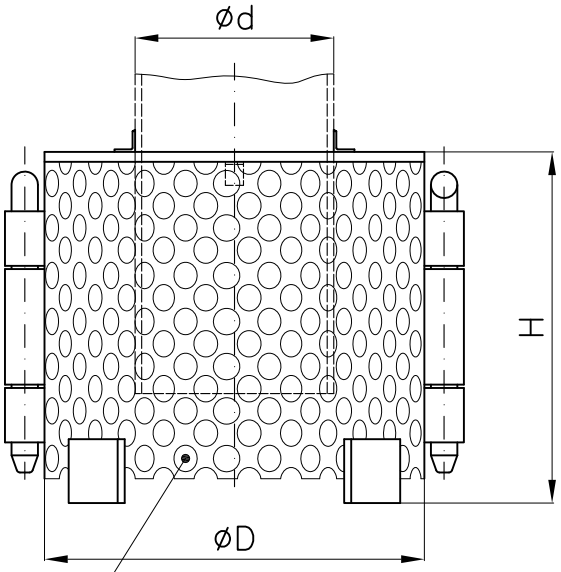

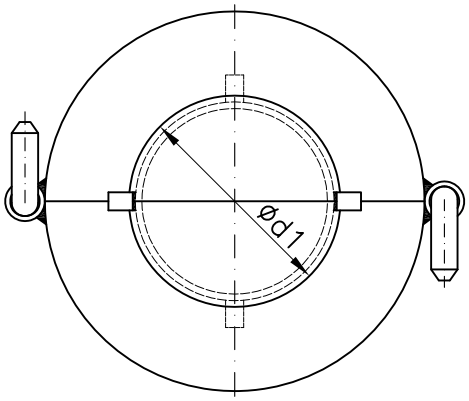

Exec.01 – UNAV 8921.1

Tipo chiuso – Closed type

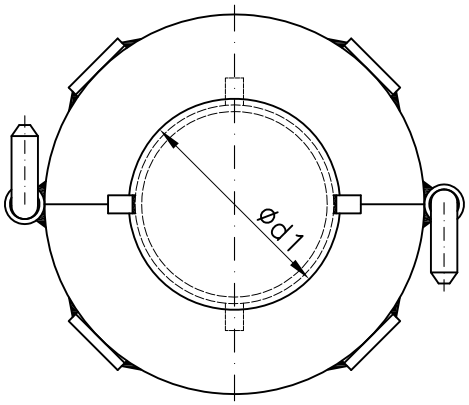

Exec.02 – UNAV 8922.1

Tipo aperto – Open type

Exec.01					Exec.02				
d	d1	D	H	Weight (Kg)	d	d1	D	H	Weight (Kg)
40	48	90	86		40	48	90	92.5	
50	60	115	98		50	60	115	105	
65	80	150	123		65	80	150	130	
80	94	180	150		80	94	180	156	
100	114	220	188		100	114	220	196	
125	138	275	238		125	138	275	246	
150	165	330	288		150	165	330	296	
175	200	390	338		175	200	390	347	
200	225	450	380		200	225	450	389	
					250	280	550	477	
					300	330	660	573	
					350	375	770	669	
					400	425	925	814	
					450	478	1040	914	
					500	530	1150	1004	

Combinazione materiali standard – Standard materials Combination			
		AZ	316
ITEM	DENOMINAZIONE DENOMINATION	MATERIALE MATERIAL	MATERIALE MATERIAL
01	Body	Galvanized steel (S275JR) UNI EN10025	Stainless steel AISI316 UNI EN10088
02	Basket	Galvanized steel (S275JR) UNI EN10025	Stainless steel AISI316 UNI EN10088
03	Pin	Galvanized steel (S275JR) UNI EN10025	Stainless steel AISI316 UNI EN10088
04	Collet	Galvanized steel (S275JR) UNI EN10025	Stainless steel AISI316 UNI EN10088
Nota: Combinazioni materiali non standard a richiesta Note: Non standard materials combinations on request			

www.medanaevisca.it

Valvole di piede serie pesante PN6 - UNAV8940

Foot valves heavy class NP6 - UNAV8940

Tab.165

Conform to:
UNI EN1092

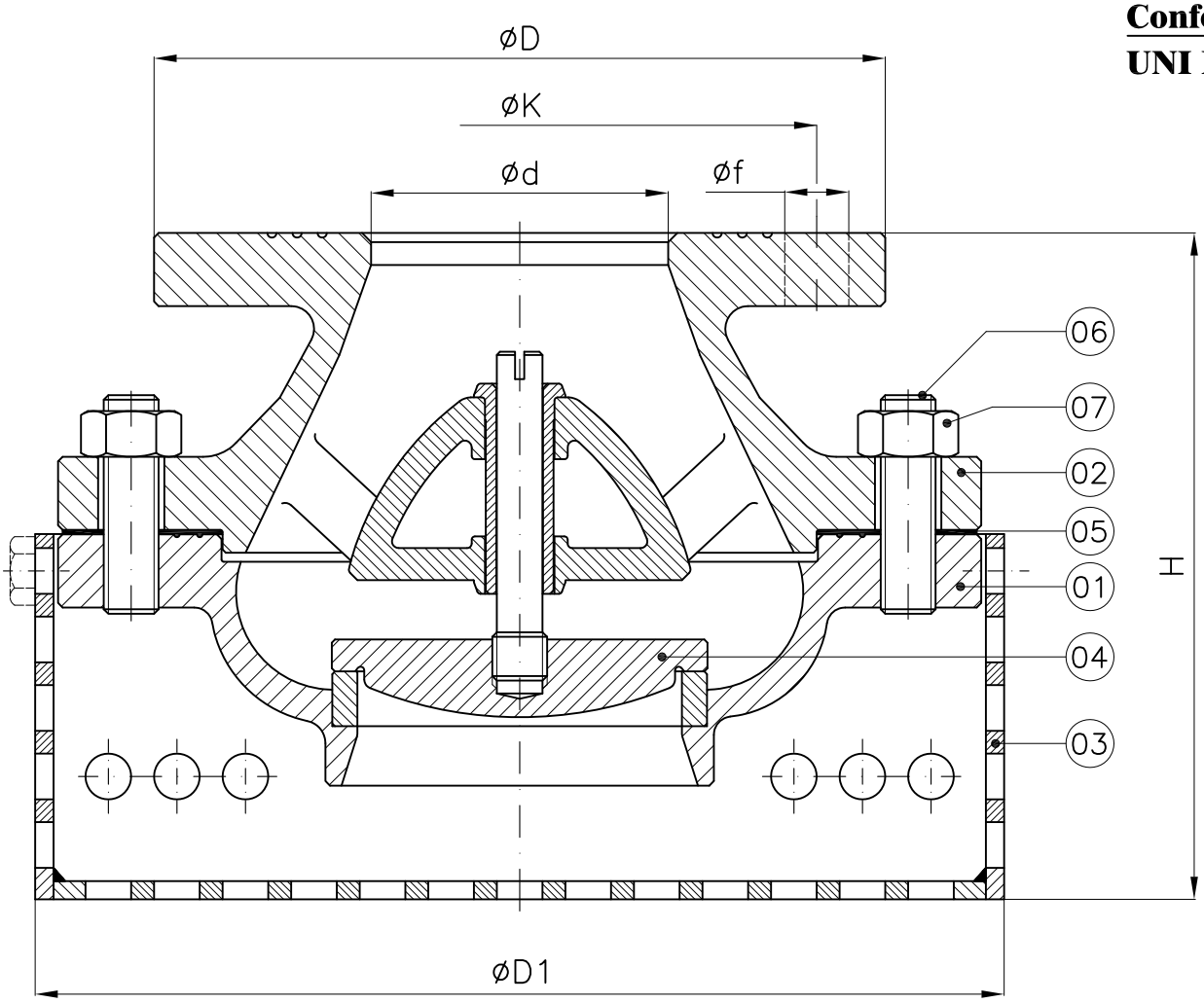

DN	Materiale *Material*	D1	d	H (~)	D	K	f	Holes NO. f	Weight (Kg)
40	Bronze	162	43	125	130	100	14	4	6
50	Bronze	162	43	125	140	110	14	4	7
65	Bronze	185	65	145	160	130	14	4	9
80	Bronze	244	80	180	190	150	18	4	18
100	Bronze	275	100	185	210	170	18	4	24
125	Bronze	321	125	220	240	200	18	8	36
150	Bronze	321	125	220	265	225	18	8	40
200	Bronze	425	202	290	320	280	18	8	71
250	Bronze	460	251	360	375	335	18	12	91

DN	Materiale *Material*	D1	d	H (~)	D	K	f	Holes NO. f	Weight (Kg)
40	Cast iron	162	50	135	130	100	14	4	6.5
50	Cast iron	162	50	135	140	110	14	4	7
65	Cast iron	212	65	150	160	130	14	4	11
80	Cast iron	244	80	180	190	150	18	4	17.5
100	Cast iron	275	100	190	210	170	18	4	21.5
125	Cast iron	321	125	225	240	200	18	8	32
150	Cast iron	365	150	235	265	225	18	8	35
200	Cast iron	425	200	290	320	280	18	8	66
250	Cast iron	490	250	350	375	335	18	12	91

Combinazione materiali standard – Standard materials Combination				
		B/316	G/316	G/B
ITEM	DENOMINAZIONE DENOMINATION	MATERIALE MATERIAL	MATERIALE MATERIAL	MATERIALE MATERIAL
01	Body	Bronze UNI EN1982 G-CuSn5Zn5Pb5	Cast iron UNI EN1561 EN-GJL-250	Cast iron UNI EN1561 EN-GJL-250
02	Bonnet	Bronze UNI EN1982 G-CuSn5Zn5Pb5	Cast iron UNI EN1561 EN-GJL-250	Cast iron UNI EN1561 EN-GJL-250
03	Basket	Stainless steel AISI316 UNI EN10088	Stainless steel AISI316 UNI EN10088	Galvanized steel (S275JR) UNI EN10025
04	Disc	Bronze UNI EN1982 G-CuSn5Zn5Pb5	Stainless steel AISI316 UNI EN10088	Bronze UNI EN1982 G-CuSn5Zn5Pb5
05	Gasket	EPDM	EPDM	EPDM
06	Bonnet stud bolt	Stainless Steel AISI304 (A2)	Galvanized Steel 8.8 EN20898-1	Galvanized Steel 8.8 EN20898-1
07	Nut	Brass CW617N (OT58)	Galvanized Steel 8.8 EN20898-1	Galvanized Steel 8.8 EN20898-1
Nota: Combinazioni materiali non standard a richiesta Note: Non standard materials combinations on request				

Valvole di piede PN10 M.M.I. - serie leggera Marina Militare Italiana
Foot valves NP10 M.M.I. - light class Italian Navy

Tab.166

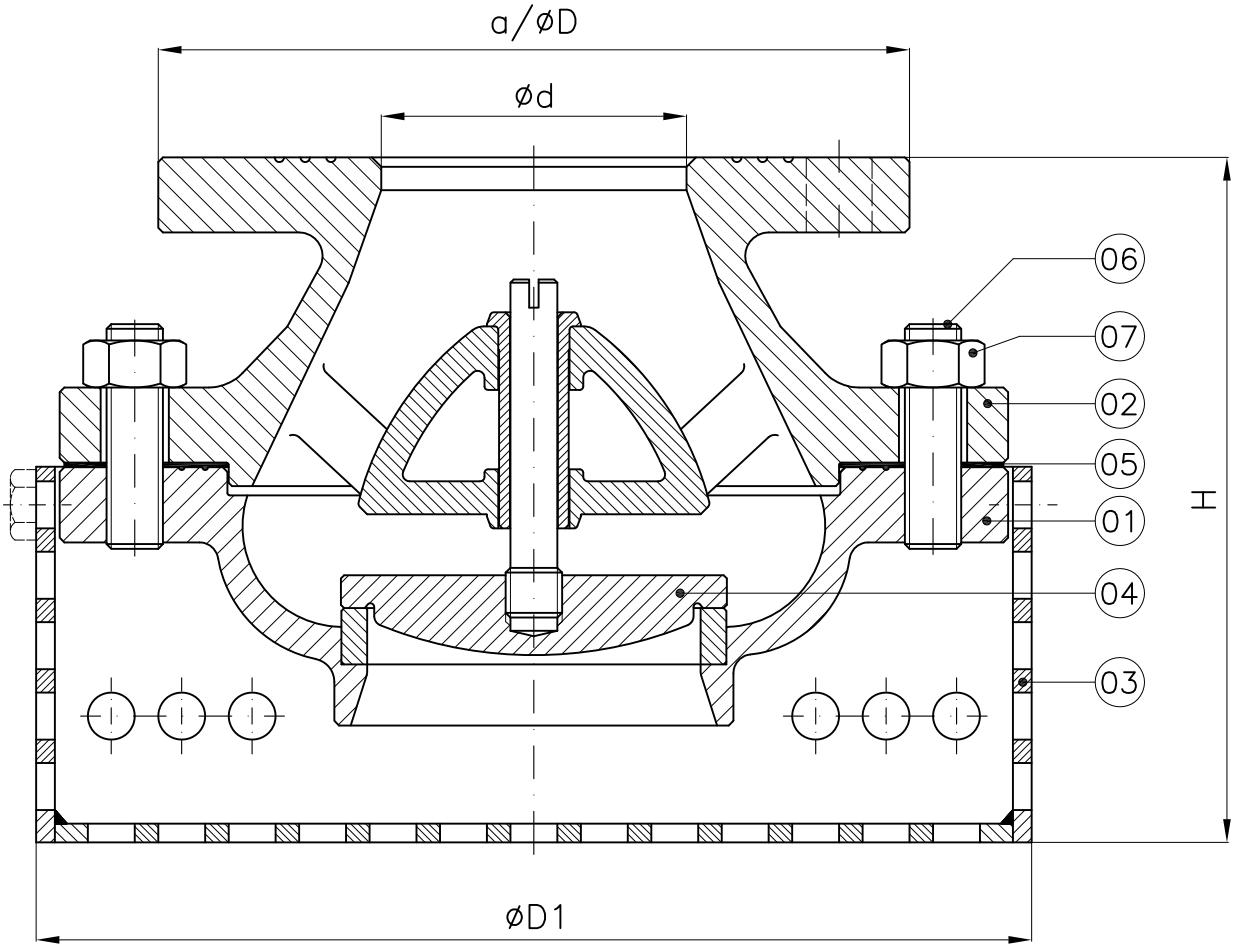

DN	D1	d	H (~)	a	D	K	f	Holes NO. f	Weight (Kg)
40	152	40	105	85	110	85	14	4	
50	171	50	120	95	120	95	14	4	
60	191	60	130	–	135	110	14	6	
70	203	70	135	–	140	115	14	6	
80	229	80	155	–	155	130	14	8	
100	254	100	175	–	175	150	14	8	
125	305	125	200	–	200	175	14	12	
150	343	150	220	–	230	205	14	12	

Flangia quadra
Square flange

DN≤50

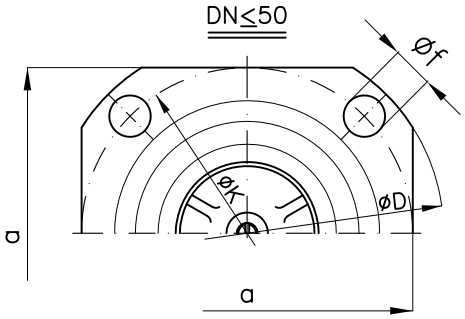

Combinazione materiali standard – Standard materials Combination			
		B/316	N/316
ITEM	DENOMINAZIONE DENOMINATION	MATERIALE MATERIAL	MATERIALE MATERIAL
01	Body	Bronze UNI EN1982 G-CuSn5Zn5Pb5	Bronze UNI EN1982 G-CuSn10Zn2Ni2
02	Bonnet	Bronze UNI EN1982 G-CuSn5Zn5Pb5	Bronze UNI EN1982 G-CuSn10Zn2Ni2
03	Basket	Stainless steel AISI316 UNI EN10088	Stainless steel AISI316 UNI EN10088
04	Disc	Bronze UNI EN1982 G-CuSn5Zn5Pb5	Bronze UNI EN1982 G-CuSn10Zn2Ni2
05	Gasket	EPDM	EPDM
06	Bonnet stud bolt	Stainless Steel AISI304 (A2)	Stainless Steel AISI316 (A4)
07	Nut	Brass CW617N (OT58)	Stainless Steel AISI316 (A4)
Nota: Combinazioni materiali non standard a richiesta Note: Non standard materials combinations on request			

Flangia tonda
Round flange

DN≥60

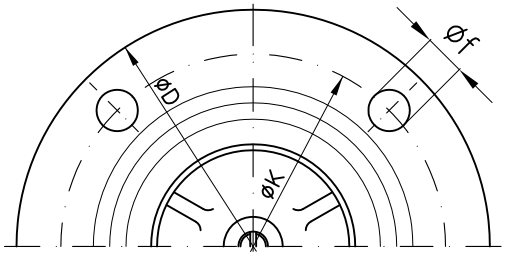

Valvole di fondo in ottone, serie PN10
Brass foot valves, class NP10

Art.24

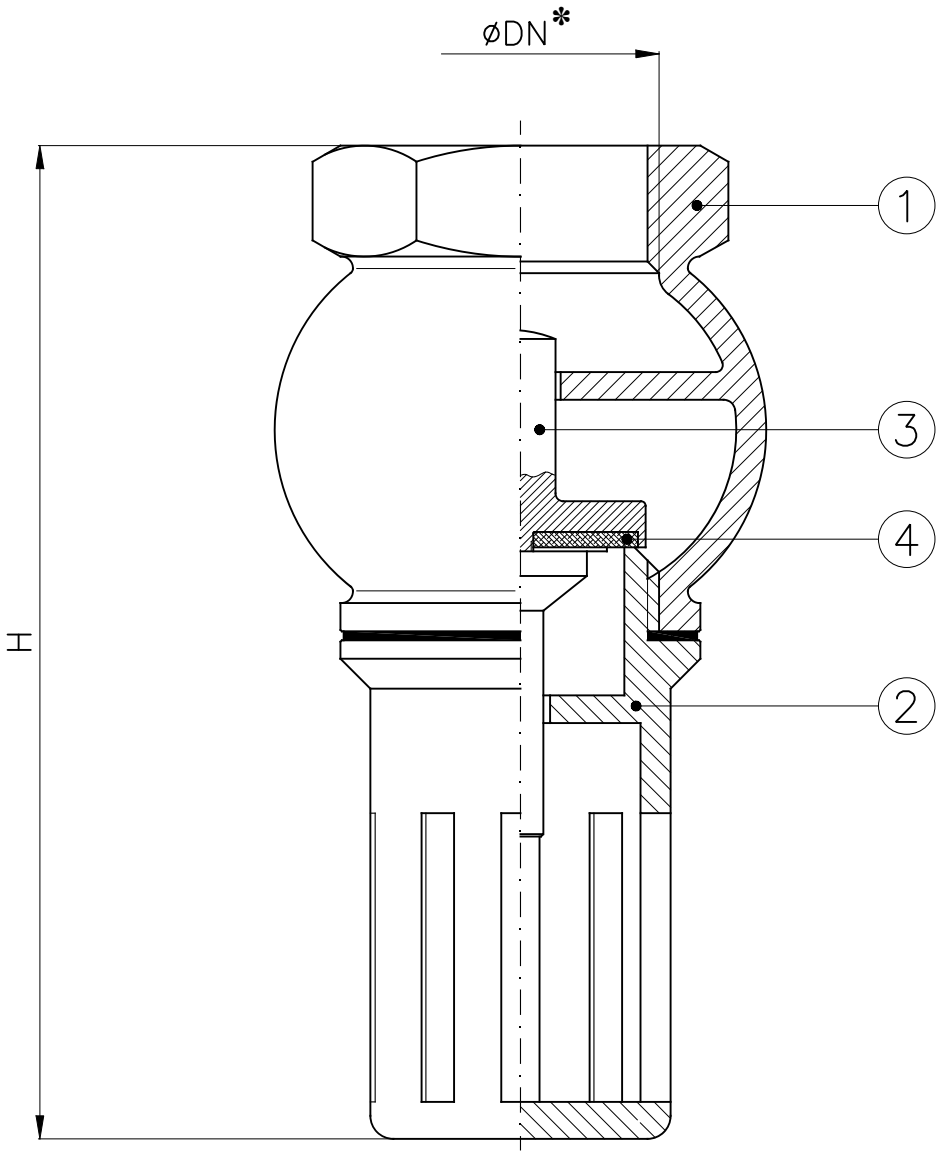

*: Filettatura GAS
*: *BSPP threaded*

DN	H	Weight (Kg)
1/2"	60	0.12
3/4"	73	0.24
1"	81	0.35
1"1/4	95	0.42
1"1/2	103	0.60
2"	121	0.82
2"1/2	136	1.5
3"	151	1.8
4"	187	3.4
5"	238	6.8

Combinazione materiali standard – Standard materials Combination		
		O/O
ITEM	DENOMINAZIONE DENOMINATION	MATERIALE MATERIAL
01	Body	Brass CW617N (OT58)
02	Filter	Brass CW617N (OT58)
03	Disc	Brass CW617N (OT58)
04	Gasket	NBR
Nota: Combinazioni materiali non standard a richiesta Note: Non standard materials combinations on request		

Valvole di fondo flangiate in ottone con succheruola, sede in gomma, serie PN6-16
Flanged brass foot valves with rose pipe, rubber seat, class NP6-16

Art.24FL

Conform to:
UNI EN1092

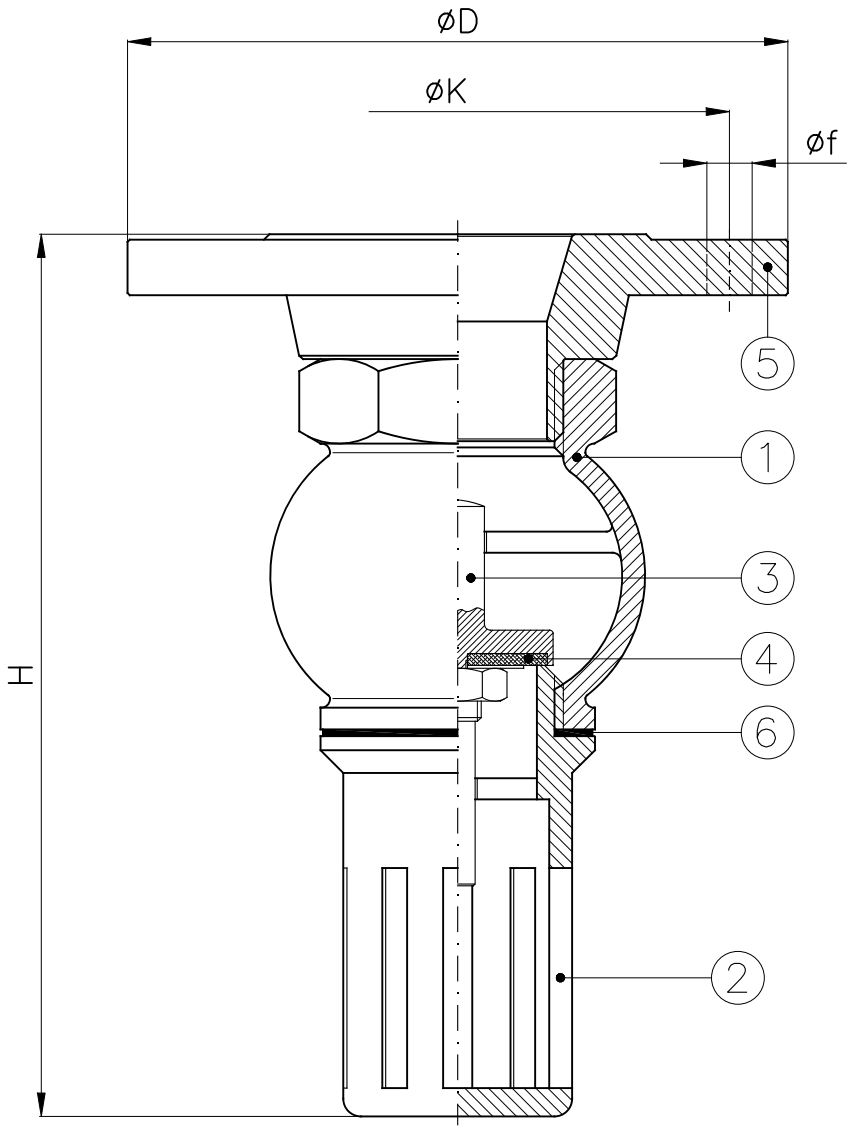

		PN6				PN16				
DN	H (~)	D	K	f	Holes NO. f	D	K	f	Holes NO. f	Weight (Kg)
15	90	80	55	11	4	95	65	14	4	0.9
20	95	90	65	11	4	105	75	14	4	1
25	115	100	75	11	4	115	85	14	4	1.1
32	120	120	90	14	4	140	100	18	4	1.9
40	140	130	100	14	4	150	110	18	4	2.6
50	160	140	110	14	4	165	125	18	4	3.5
65	170	160	130	14	4	185	145	18	4	3.9
80	195	190	150	18	4	200	160	18	8	5.4
100	230	210	170	18	4	220	180	18	8	9.2
125	300	240	200	18	8	250	210	18	8	14.1

Combinazione materiali standard – Standard materials Combination		
		B/O
ITEM	DENOMINAZIONE DENOMINATION	MATERIALE MATERIAL
01	Body	Brass CW617N (OT58)
02	Filter	Brass CW617N (OT58)
03	Disc	Brass CW617N (OT58)
04	Gasket disc	NBR
05	Flange	Bronze UNI EN1982 G-CuSn5Zn5Pb5
06	Gasket	Fibre
Nota: Note:	Combinazioni materiali non standard a richiesta / Non standard materials combinations on request	

Valvole di fondo PN16 in ghisa tenuta gomma
Foot valves NP16 cast iron rubber seal

Art.25

Conform to:
UNI EN1092

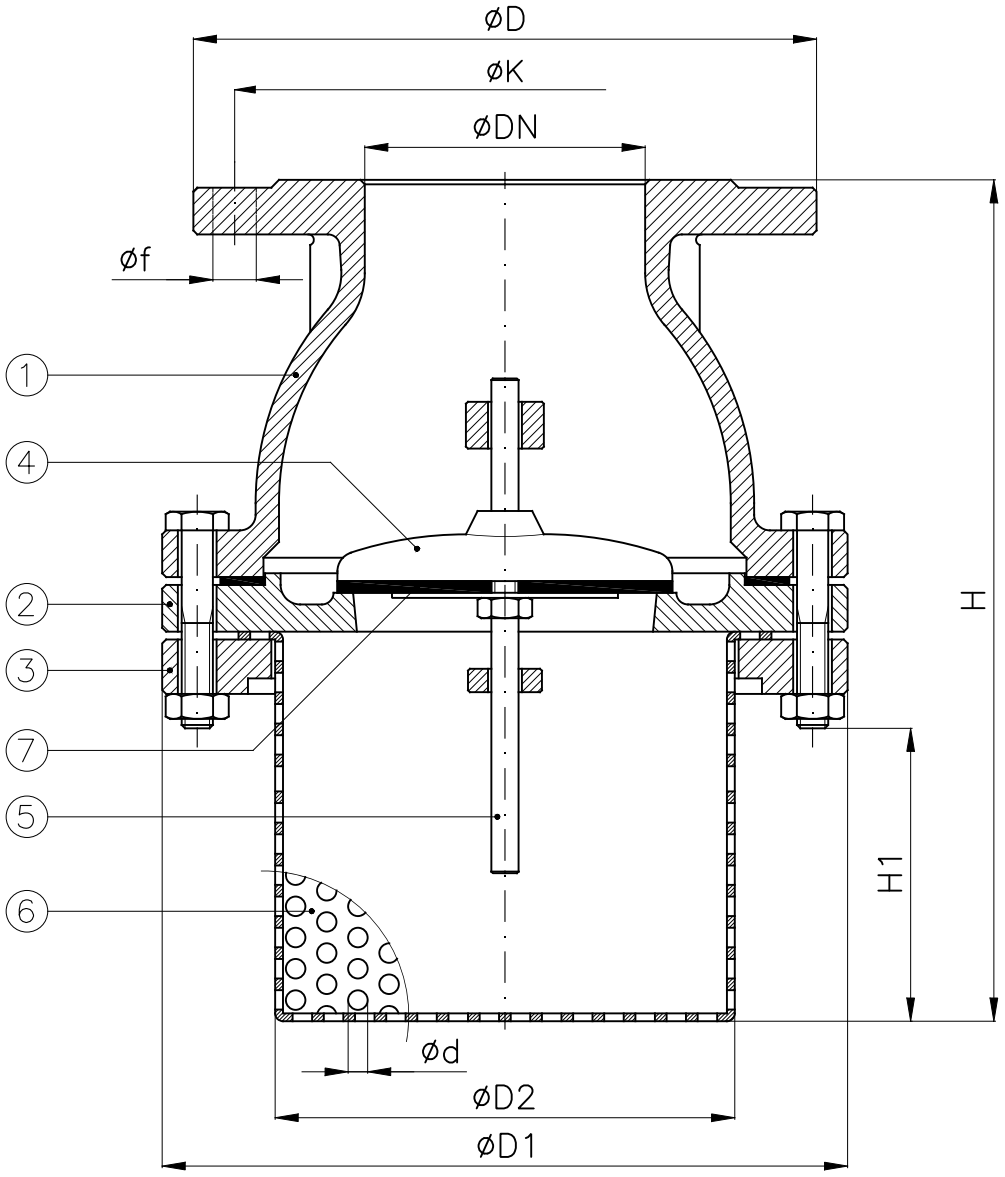

DN	D1	D2	d	H	H1	D	K	f	Holes NO. f	Weight (Kg)
40	150	93	8	170	60	150	110	18	4	7
50	165	93	8	185	60	165	125	18	4	8
65	185	116	8	220	75	185	145	18	4	11
80	200	131	8	240	75	200	160	18	8	13
100	240	158	8	265	95	220	180	18	8	22
125	275	193	8	320	115	250	210	18	8	26
150	315	226	8	370	135	285	240	22	8	34
200	390	295	8	460	175	340	295	22	12	55
250	485	395	8	560	220	405	355	26	12	112
300	565	470	8	670	265	460	410	26	12	155

Combinazione materiali standard – Standard materials Combination		
		G/AZ
ITEM	DENOMINAZIONE DENOMINATION	MATERIALE MATERIAL
01	Body	Cast iron UNI EN1561 EN-GJL-250
02	Seat disc	Cast iron UNI EN1561 EN-GJL-250
03	Washer	Cast iron UNI EN1561 EN-GJL-250
04	Disc	Cast iron UNI EN1561 EN-GJL-250
05	Slide bar	Brass CW617N (OT58)
06	Sieve	Galvanized steel
07	Gasket	Fiber reinforced rubber
Nota: Combinazioni materiali non standard a richiesta Note: Non standard materials combinations on request		

Valvola di fondo filettata in acciaio inox AISI316
Threaded foot valve stainless steel AISI316
Valvola di fondo flangiata in acciaio inox AISI316 serie PN16
Flanged foot valve stainless steel AISI316 class NP16

Art.270

Art.280

Conform to:
UNI EN1092

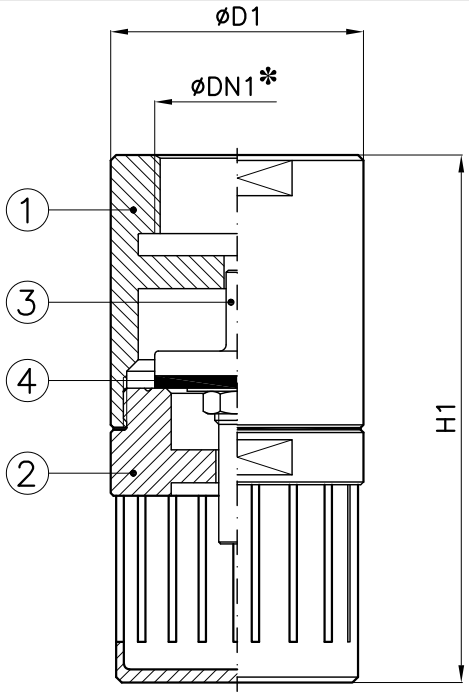

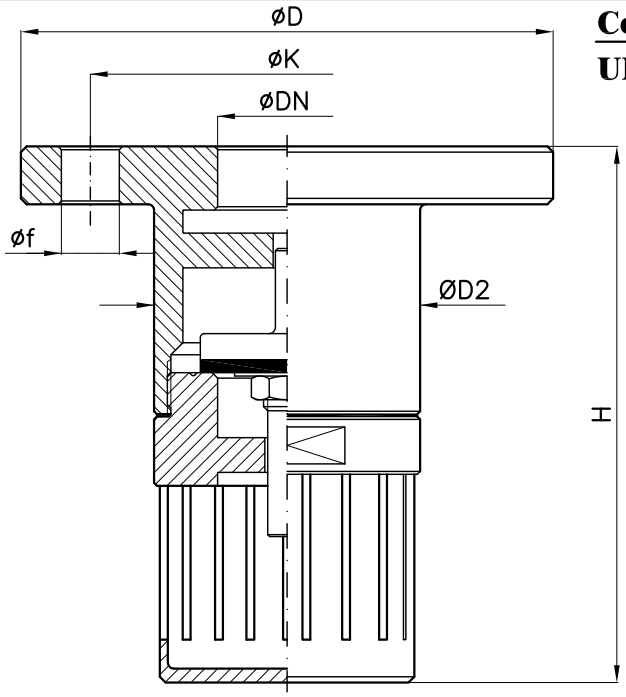

Art.270

Art.280

*: Filettatura GAS
*: *BSPP threaded*

Art.270										
DN1	3/8"	1/2"	3/4"	1"	1"1/4	1"1/2	2"	2"1/2	3"	4"
D1	30	35	42	48	60	70	80	95	130	130
H1	95	105	124	135	145	155	170	185	240	240

Art.280									
DN	15	20	25	32	40	50	65	80	100
D2	35	42	48	60	70	80	95	130	130
H	108	127	138	150	160	175	190	210	250
D	95	105	115	140	150	165	185	200	220
K	65	75	85	100	110	125	145	160	180
f	14	14	14	18	18	18	18	18	18
Holes No. f	4	4	4	4	4	4	4	8	8

Combinazione materiali standard – Standard materials Combination		
		316/316
ITEM	DENOMINAZIONE DENOMINATION	MATERIALE MATERIAL
01	Body	Stainless steel AISI316 UNI EN10088
02	Filter	Stainless steel AISI316 UNI EN10088
03	Disc	Stainless steel AISI316 UNI EN10088
04	Gasket	NBR
Nota: Combinazioni materiali non standard a richiesta Note: Non standard materials combinations on request		

Valvole di fondo in acciaio inox AISI316, serie PN16 con filtro
Stainless steel AISI316 foot valves, class NP16 with filter

Art.1020M-FIL

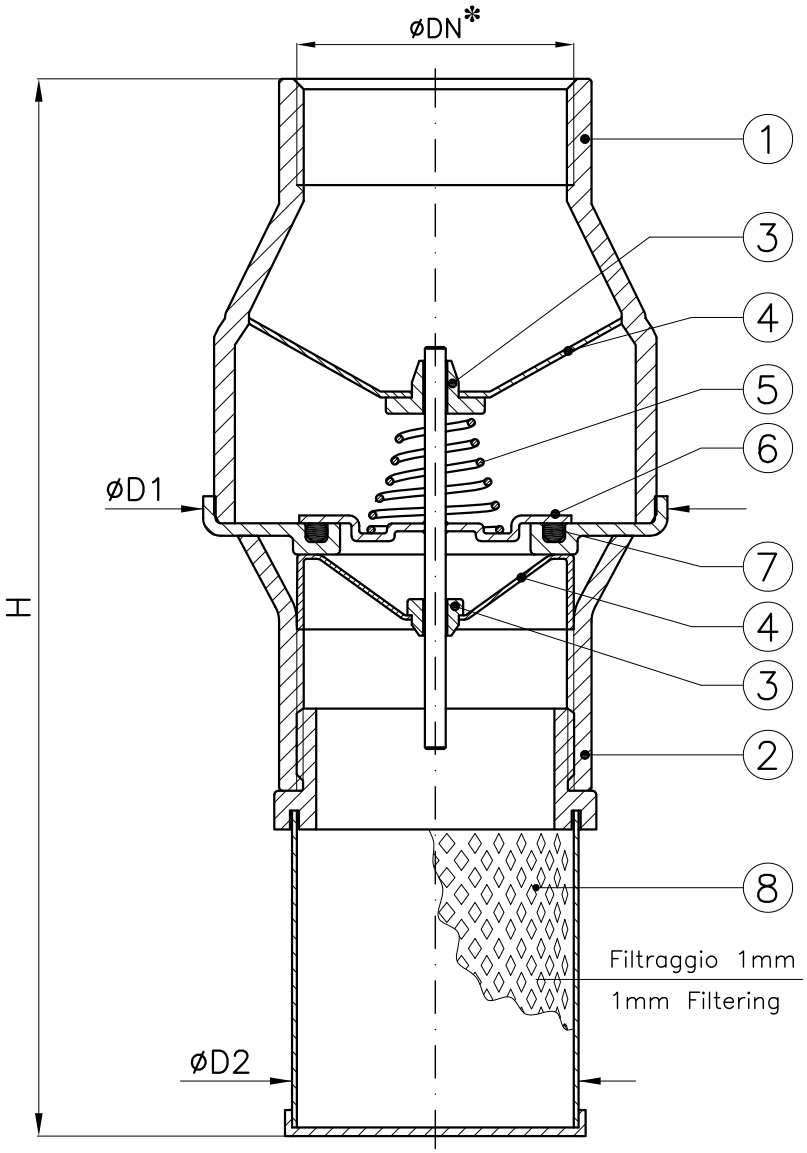

*: Filettatura GAS
*: *BSPP threaded*

DN	H (~)	D1	D2
2"1/2	230	113	80
3"	260	132	93

Combinazione materiali standard – Standard materials Combination		
		316/316
ITEM	DENOMINAZIONE DENOMINATION	MATERIALE MATERIAL
01	Body end	Stainless steel AISI316 UNI EN10088
02	Body in	Stainless steel AISI316 UNI EN10088
03	Guide bush	PTFE
04	Flow control disc guide	Stainless steel AISI316 UNI EN10088
05	Spring	Stainless steel AISI316 UNI EN10088
06	Disc	Stainless steel AISI316 UNI EN10088
07	Seal ring	VITON or PTFE
08	Fitting	Nylon

Nota: Combinazioni materiali non standard a richiesta
Note: Non standard materials combinations on request

Valvole di fondo in acciaio inox AISI316, serie PN16 con filtro
Stainless steel AISI316 foot valves, class NP16 with filter

Art.1022G-FIL

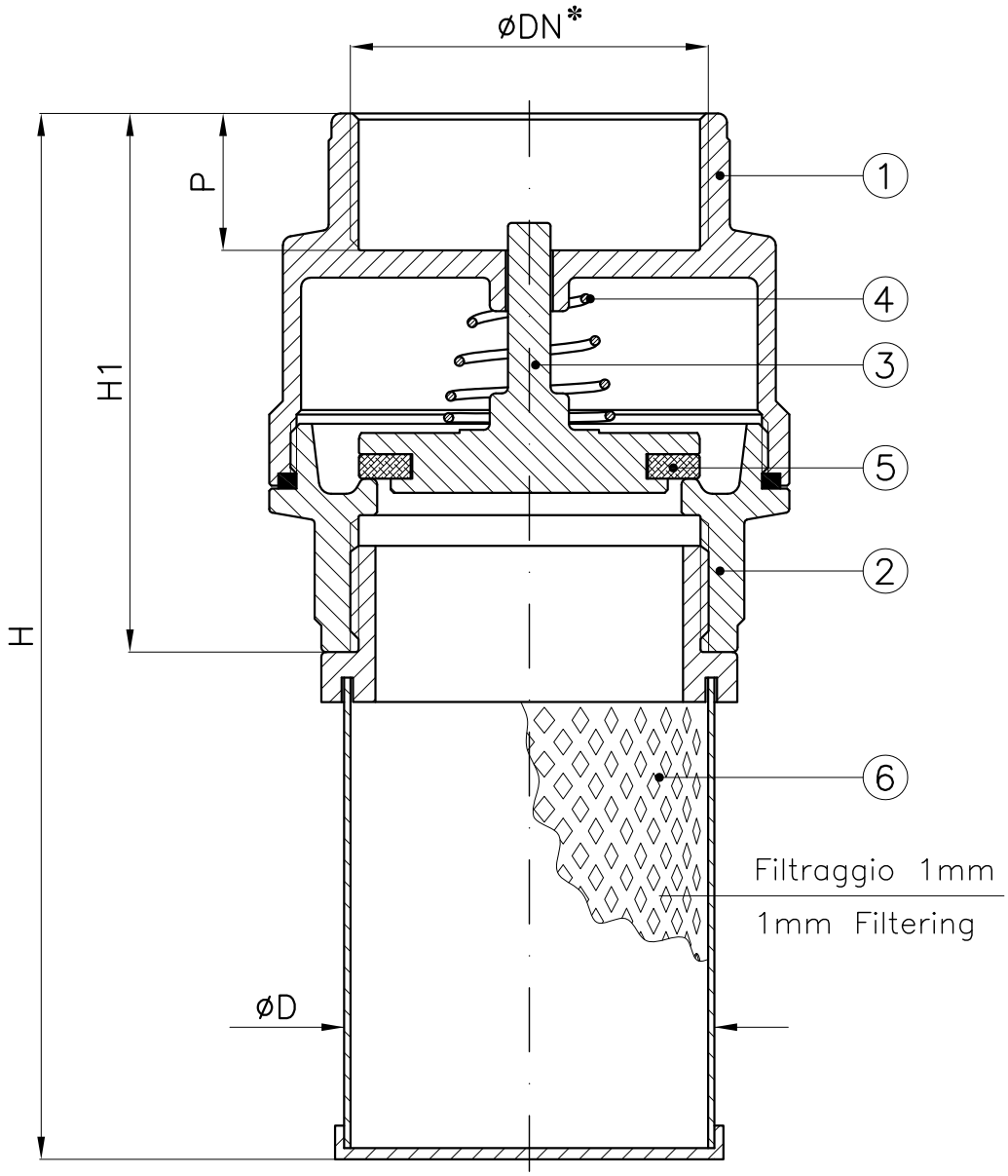

*: Filettatura GAS
*: *BSPP threaded*

DN	D	H (~)	H1	P
1/2"	22	96	53.5	13.5
3/4"	29	105	58	14.5
1"	36	115	65	16
1"1/4	44	131	72.5	18.5
1"1/2	49	145	76	18.5
2"	61	175	88.5	22.5

Combinazione materiali standard – Standard materials Combination		
		316/316
ITEM	DENOMINAZIONE DENOMINATION	MATERIALE MATERIAL
01	Body	Stainless steel AISI316 UNI EN10088
02	Body end	Stainless steel AISI316 UNI EN10088
03	Disc	Stainless steel AISI316 UNI EN10088
04	Spring	Stainless steel AISI316 UNI EN10088
05	Gasket	NBR
06	Fitting	Nylon

Nota: Combinazioni materiali non standard a richiesta
Note: Non standard materials combinations on request

Valvole di fondo flangiate in bronzo serie PN6
Bronze flanged foot valves class NP6

Art.280-B

Conform to:
UNI EN1092

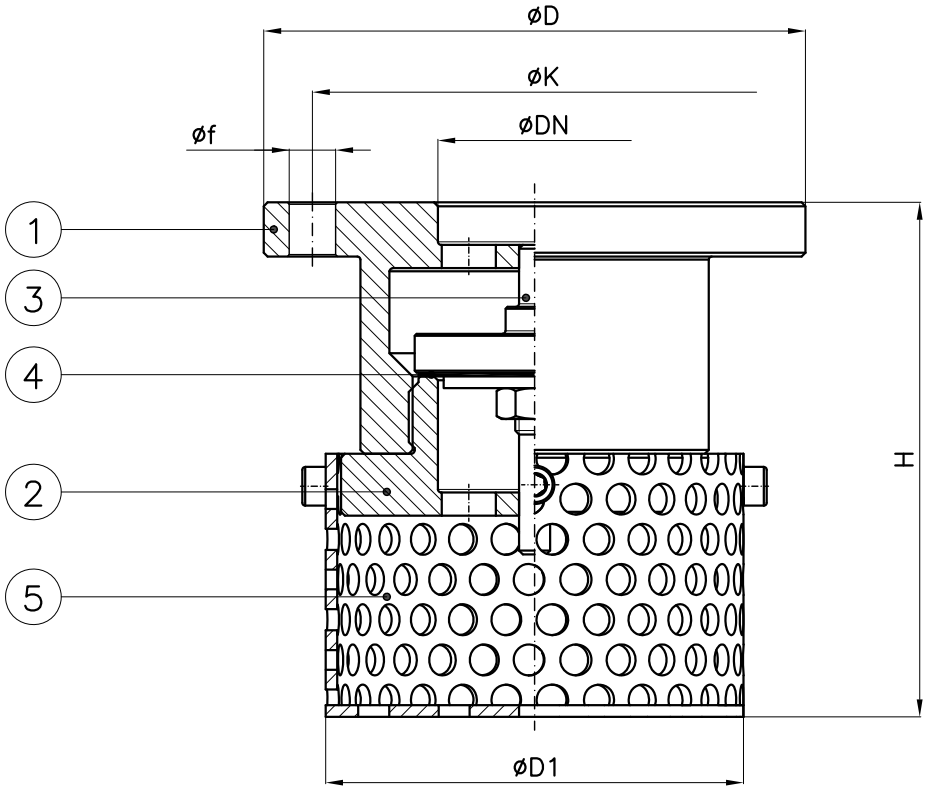

DN	D1	H	D	K	f	Holes No. f
50	108	135	140	110	14	4

Combinazione materiali standard – Standard materials Combination		
		B/316
ITEM	DENOMINAZIONE DENOMINATION	MATERIALE MATERIAL
01	Upper Body	Bronze UNI EN1982 G-CuSn5Zn5Pb5
02	Lower Body	Bronze UNI EN1982 G-CuSn5Zn5Pb5
03	Disc	Stainless steel AISI316 UNI EN10088
04	Gasket	NBR
05	Basket	Stainless steel AISI316 UNI EN10088
Nota: Combinazioni materiali non standard a richiesta Note: Non standard materials combinations on request		

Valvole di fondo flangiate in acciaio inox AISI316 serie PN6
Stainless steel AISI316 flanged foot valves class NP6

Art.280-X

Conform to:
UNI EN1092

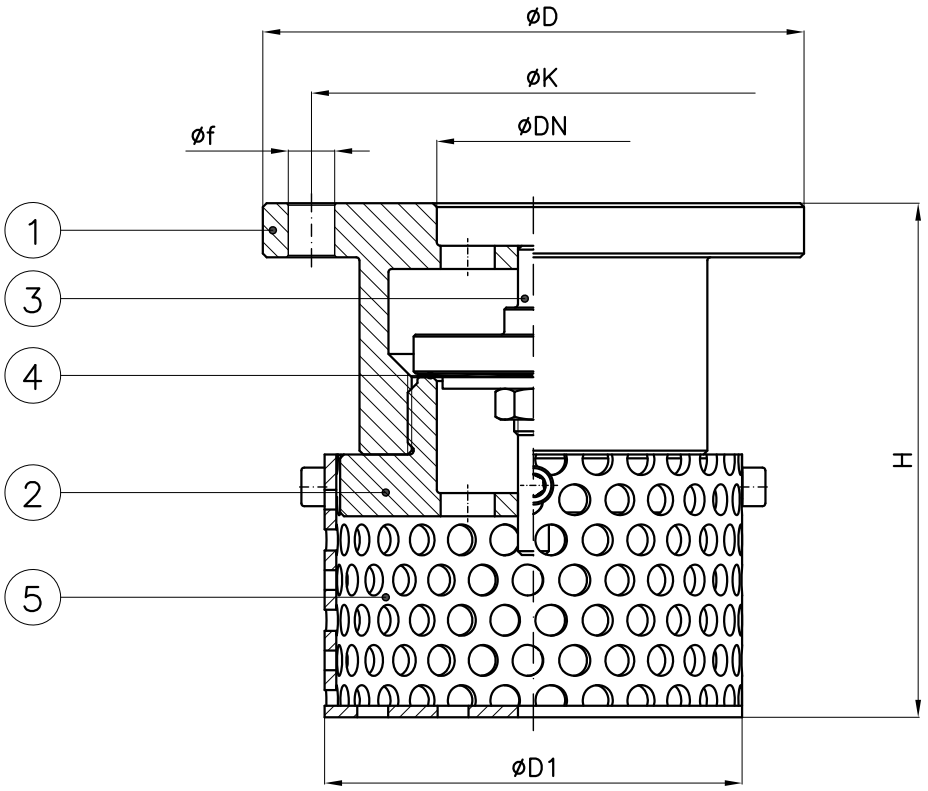

DN	D1	H	D	K	f	Holes No. f
50	108	135	140	110	14	4

Combinazione materiali standard – Standard materials Combination		
		316/316
ITEM	DENOMINAZIONE DENOMINATION	MATERIALE MATERIAL
01	Upper Body	Stainless steel AISI316 UNI EN10088
02	Lower Body	Stainless steel AISI316 UNI EN10088
03	Disc	Stainless steel AISI316 UNI EN10088
04	Gasket	NBR
05	Basket	Stainless steel AISI316 UNI EN10088
Nota: Combinazioni materiali non standard a richiesta Note: Non standard materials combinations on request		

Valvole di ritegno a via diritta e ad angolo PN6-10M.M.I.-16 UNAV9215-9216
Non return check valves straight and angle type NP6-10M.M.I.-16 UNAV9215-9216

Tab.128

RF FLANGES: A/GS
FF FLANGES: B/G

Conform to:
UNI EN1092

UNAV 9215
(NE407250)

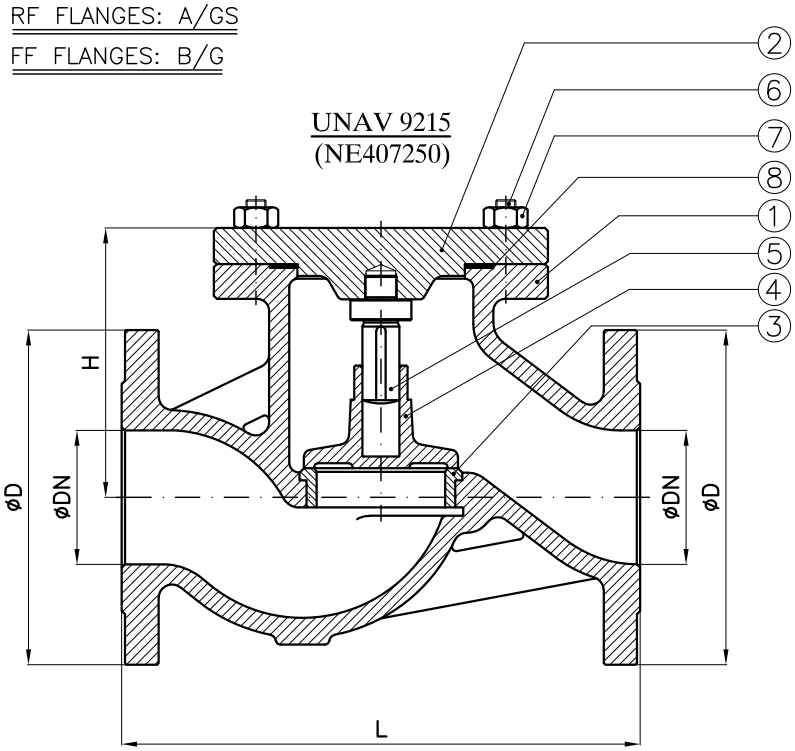

Tab.128V

UNAV 9216
(NE407240)

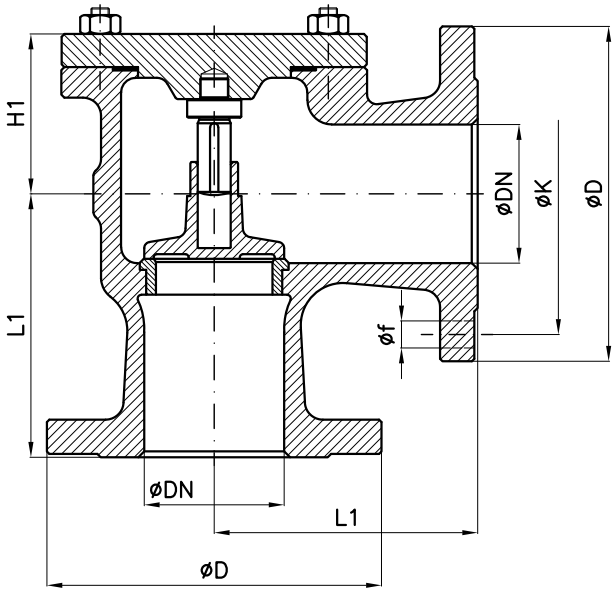

Tab.128A

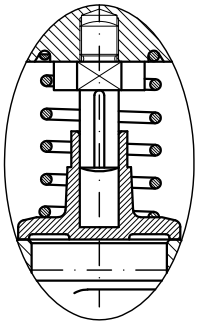

Esecuzione con molla – A richiesta
Execution with spring – On request

Coperchio avvitato per valvole PN10M.M.I. e PN6 DN15÷32
Screwed bonnet for valves NP10M.M.I. and NP6 ND15÷32

DN	H (~) PN10M.M.I.	H (~) PN6–16	H1 (~) PN10M.M.I.	H1 (~) PN6–16	L PN10M.M.I.	L PN6–16	L1 PN10M.M.I.	L1 PN6	L1 PN16
15	70	75	55	60	120	150	55	70	85
20	70	80	55	60	120	150	55	70	85
25	70	80	55	60	130	160	60	75	90
32	80	100	65	70	140	180	65	80	105
40	90	100	60	70	180	200	75	95	115
50	95	105	65	75	210	230	85	100	125
65	–	125	–	85	–	290	–	120	145
70	115	–	75	–	260	–	105	–	–
80	120	135	80	90	280	310	110	130	155
100	135	165	85	100	330	350	130	150	175
125	160	180	95	110	390	400	145	175	200
150	180	200	105	120	450	480	160	200	225
175	205	225	115	130	530	550	190	230	250
200	215	265	120	135	580	600	220	250	275
250	–	305	–	170	–	730	–	300	325
300	–	335	–	200	–	850	–	350	375

	PN6				PN10M.M.I.				PN16			
DN	D	K	f	Holes NO. f	D	K	f	Holes NO. f	D	K	f	Holes NO. f
15	80	55	11	4	90	65	14	4	95	65	14	4
20	90	65	11	4	90	65	14	4	105	75	14	4
25	100	75	11	4	95	70	14	4	115	85	14	4
32	120	90	14	4	100	75	14	4	140	100	18	4
40	130	100	14	4	110	85	14	4	150	110	18	4
50	140	110	14	4	120	95	14	4	165	125	18	4
65	160	130	14	4	–	–	–	–	185	145	18	4
70	–	–	–	–	140	115	14	6	–	–	–	–
80	190	150	18	4	155	130	14	8	200	160	18	8
100	210	170	18	4	175	150	14	8	220	180	18	8
125	240	200	18	8	200	175	14	12	250	210	18	8
150	265	225	18	8	230	205	14	12	285	240	22	8
175	295	255	18	8	270	240	18	12	315	270	22	8
200	320	280	18	8	295	265	18	12	340	295	22	12
250	375	335	18	12	–	–	–	–	405	355	26	12
300	440	395	22	12	–	–	–	–	460	410	26	12

Combinazione materiali standard – Standard materials Combination				
		A/316	B/316	B/B
ITEM	DENOMINAZIONE DENOMINATION	MATERIALE MATERIAL	MATERIALE MATERIAL	MATERIALE MATERIAL
01	Body	Cast steel GP240-GH UNI EN10213	Bronze UNI EN1982 G-CuSn5Zn5Pb5	Bronze UNI EN1982 G-CuSn5Zn5Pb5
02	Bonnet	Cast steel GP240-GH UNI EN10213	Bronze UNI EN1982 G-CuSn5Zn5Pb5	Bronze UNI EN1982 G-CuSn5Zn5Pb5
03	Body seat	Stainless steel AISI316 UNI EN10088	Bronze UNI EN1982 G-CuSn5Zn5Pb5	Bronze UNI EN1982 G-CuSn5Zn5Pb5
04	Disc (≤ DN80)	Stainless steel AISI316 UNI EN10088	Stainless steel AISI316 UNI EN10088	Bronze UNI EN1982 G-CuSn5Zn5Pb5
04	Disc (≥ DN100)	Cast steel GP240-GH UNI EN10213 plus AISI316 facing welding	Stainless steel AISI316 UNI EN10088	Bronze UNI EN1982 G-CuSn5Zn5Pb5
05	Stem	Stainless steel AISI316 UNI EN10088	Stainless steel AISI316 UNI EN10088	Brass CW614N (OT58)
06	Bonnet stud bolt	Galvanized Steel 8.8 EN20898-1	Galvanized Steel 8.8 EN20898-1	Galvanized Steel 8.8 EN20898-1
07	Nut	Galvanized Steel 8.8 EN20898-1	Galvanized Steel 8.8 EN20898-1	Galvanized Steel 8.8 EN20898-1
08	Gasket	Planiflex KG carbo/C PF81	Planiflex KG carbo/C PF81	Planiflex KG carbo/C PF81
Nota: Combinazioni materiali non standard a richiesta Note: Non standard materials combinations on request				

Combinazione materiali standard – Standard materials Combination				
		G/316	G/B	GS/316
ITEM	DENOMINAZIONE DENOMINATION	MATERIALE MATERIAL	MATERIALE MATERIAL	MATERIALE MATERIAL
01	Body	Cast iron UNI EN1561 EN-GJL-250	Cast iron UNI EN1561 EN-GJL-250	Nodular cast iron EN-GJS-400-15U UNI EN1563
02	Bonnet	Cast iron UNI EN1561 EN-GJL-250	Cast iron UNI EN1561 EN-GJL-250	Nodular cast iron EN-GJS-400-15U UNI EN1563
03	Body seat	Stainless steel AISI316 UNI EN10088	Stainless steel AISI316 UNI EN10088	Stainless steel AISI316 UNI EN10088
04	Disc (≤ DN80)	Stainless steel AISI316 UNI EN10088	Bronze UNI EN1982 G-CuSn5Zn5Pb5	Stainless steel AISI316 UNI EN10088
04	Disc (≥ DN100)	Cast steel GP240-GH UNI EN10213 plus AISI316 facing welding	Bronze UNI EN1982 G-CuSn5Zn5Pb5	Cast steel GP240-GH UNI EN10213 plus AISI316 facing welding
05	Stem	Stainless steel AISI316 UNI EN10088	Brass CW617N (OT58)	Stainless steel AISI316 UNI EN10088
06	Bonnet stud bolt	Galvanized Steel 8.8 EN20898-1	Galvanized Steel 8.8 EN20898-1	Galvanized Steel 8.8 EN20898-1
07	Nut	Galvanized Steel 8.8 EN20898-1	Galvanized Steel 8.8 EN20898-1	Galvanized Steel 8.8 EN20898-1
08	Gasket	Planiflex KG carbo/C PF81	Planiflex KG carbo/C PF81	Planiflex KG carbo/C PF81
Nota: Combinazioni materiali non standard a richiesta Note: Non standard materials combinations on request				

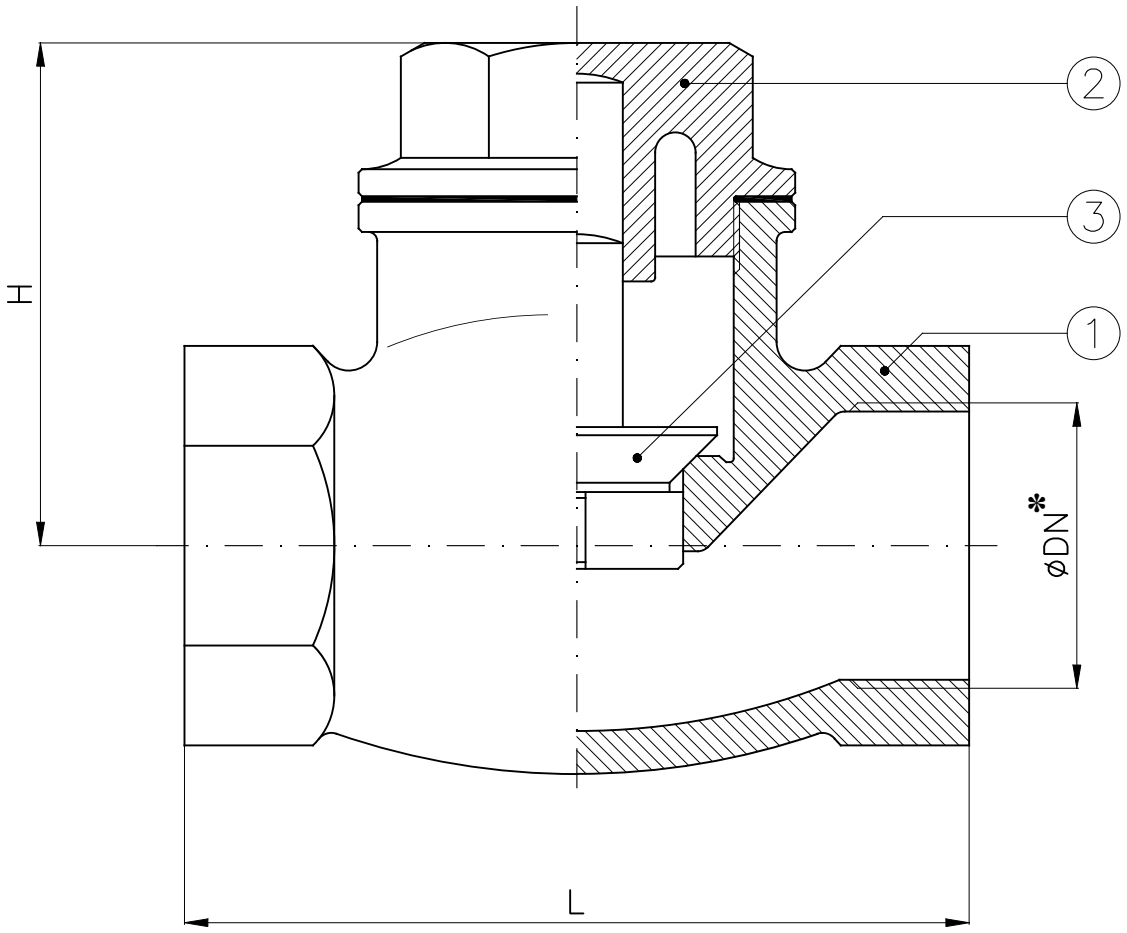

✻: Filettatura GAS
✻: *BSPP threaded*

DN	H	L	Weight (Kg)
1/4"	32	54	0.24
3/8"	32	54	0.22
1/2"	32	59	0.29
3/4"	37	71	0.49
1"	46	81	0.72
1"1/4	57	96	1.2
1"1/2	62	104	1.4
2"	66	128	2.2
2"1/2	85	155	4.4
3"	91	173	6.2
4"	105	199	10.3

Combinazione materiali standard – Standard materials Combination		
		B/O
ITEM	DENOMINAZIONE DENOMINATION	MATERIALE MATERIAL
01	Body	Bronze UNI EN1982 G-CuSn5Zn5Pb5
02	Bonnet	Brass CW617N (OT58)
03	Disc	Brass CW617N (OT58)
Nota: Combinazioni materiali non standard a richiesta Note: Non standard materials combinations on request		

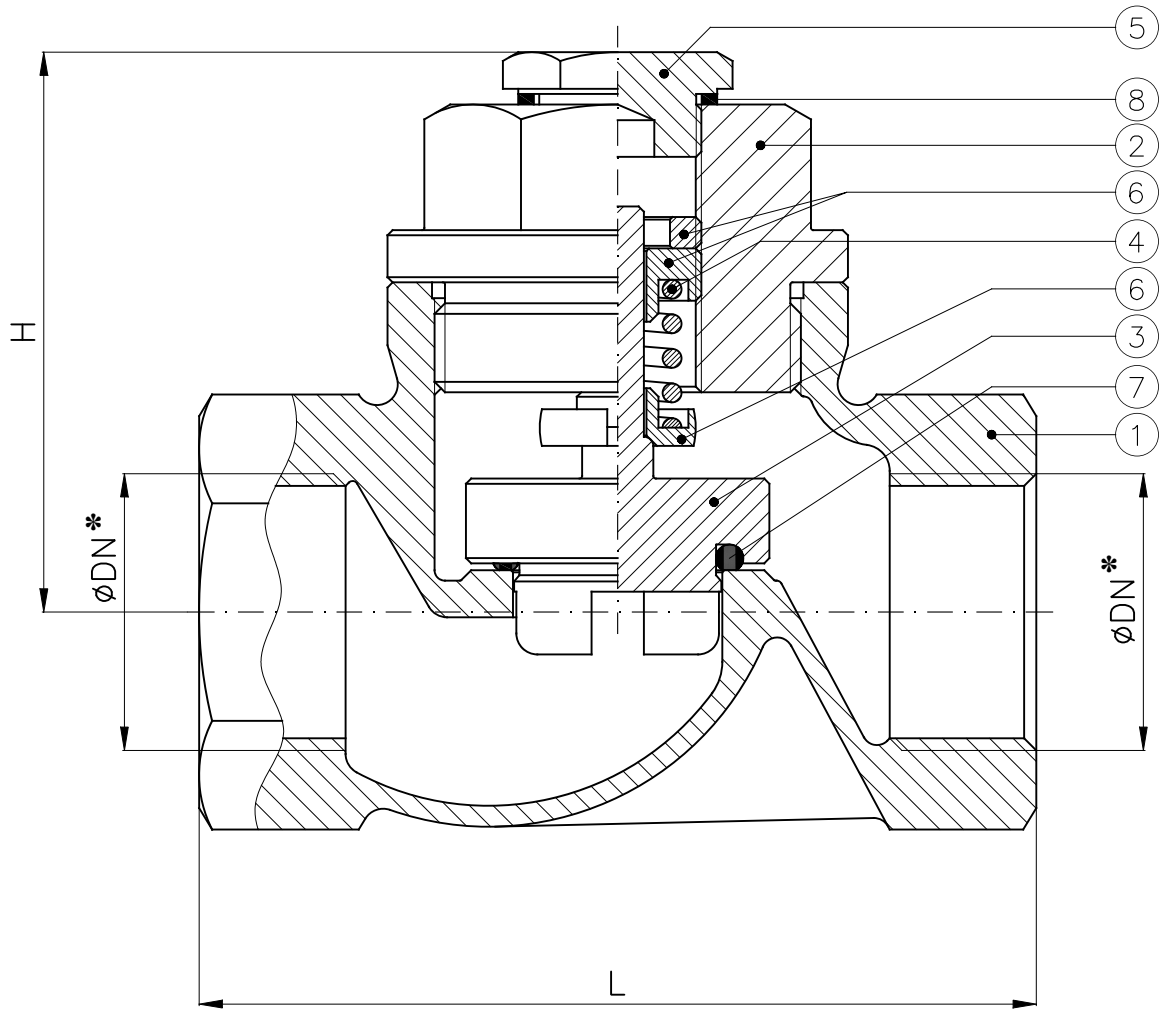

Combinazione materiali standard – Standard materials Combination		
		B/O
ITEM	DENOMINAZIONE DENOMINATION	MATERIALE MATERIAL
01	Body	Bronze UNI EN1982 G-CuSn5Zn5Pb5
02	Bonnet	Brass CW617N (OT58)
03	Disc	Brass CW617N (OT58)
04	Spring	Stainless steel AISI316 UNI EN10088
05	Plug	Brass CW617N (OT58)
06	Spring regulation	Brass CW617N (OT58)
07	Gasket	O-ring (VITON)
08	Washer	Copper
Nota: Combinazioni materiali non standard a richiesta Note: Non standard materials combinations on request		

✻: Filettatura GAS
✻: *BSPP threaded*

DN	H	L	Weight (Kg)	Pressure (Bar)
1/2"	50	66	0.4	adjustable from 0.5bar to 4bar
3/4"	53.5	80	0.7	
1"	61	93	1.1	

Valvole di ritegno in acciaio inox AISI316 con dispositivo di taratura
Stainless steel AISI316 check valves with calibration device

Art.9YAL

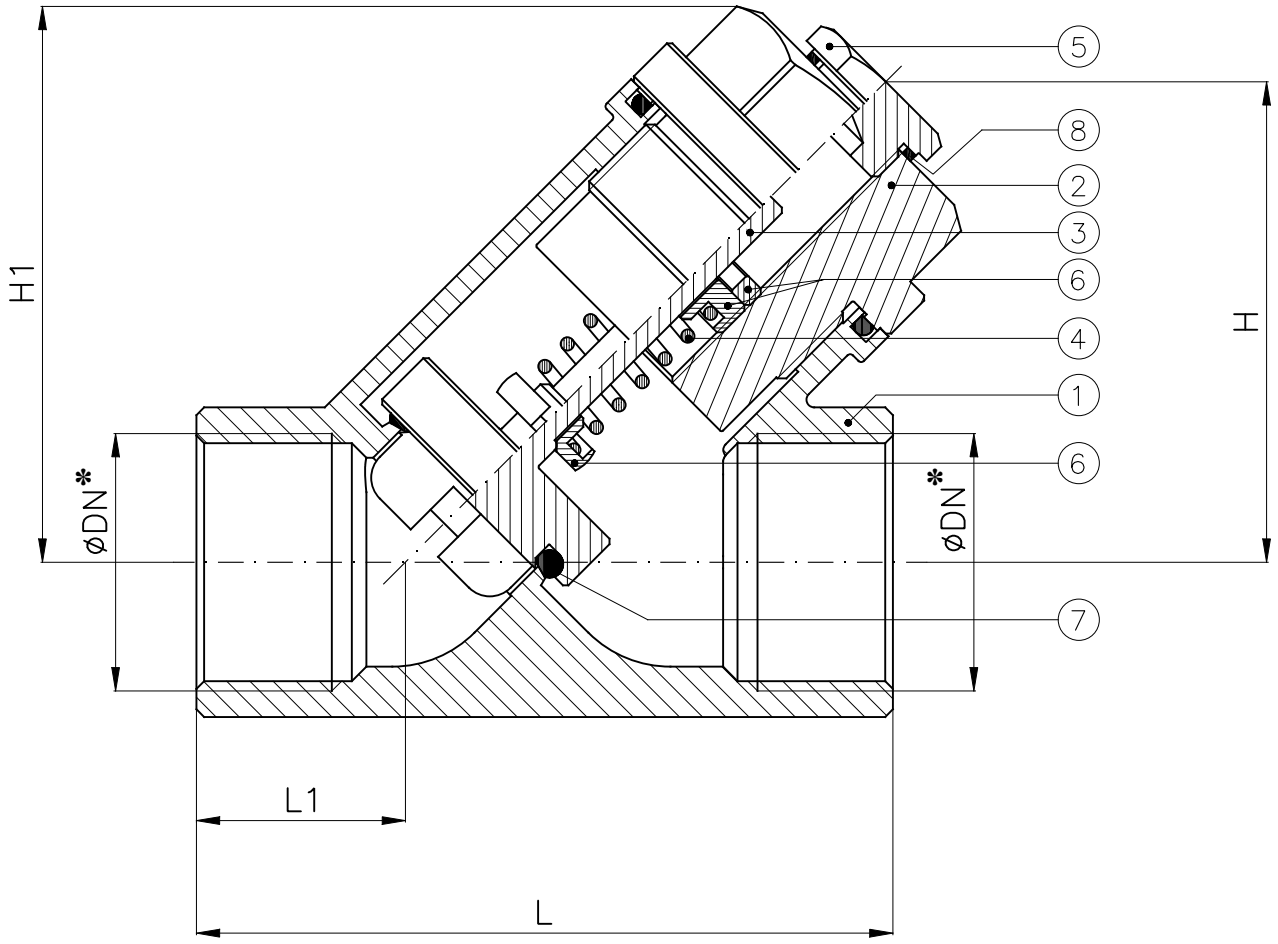

Combinazione materiali standard – Standard materials Combination		
		316/316
ITEM	DENOMINAZIONE DENOMINATION	MATERIALE MATERIAL
01	Body	Stainless steel AISI316 UNI EN10088
02	Bonnet	Stainless steel AISI316 UNI EN10088
03	Disc	Stainless steel AISI316 UNI EN10088
04	Spring	Stainless steel UNI EN10151
05	Plug	Brass CW617N (OT58)
06	Spring regulation	Brass CW617N (OT58)
07	Gasket	O–ring (VITON)
08	Washer	Copper
Nota: Combinazioni materiali non standard a richiesta Note: Non standard materials combinations on request		

✻: Filettatura GAS
✻: *BSPP threaded*

DN	H	H1	L	L1	Weight (Kg)	Pressure (Bar)
						adjustable from 0.5bar to 4bar
3/4"	55	65	75	24	0.6	
1"	65	75	90	27	1	

Conform to:
UNI EN1092

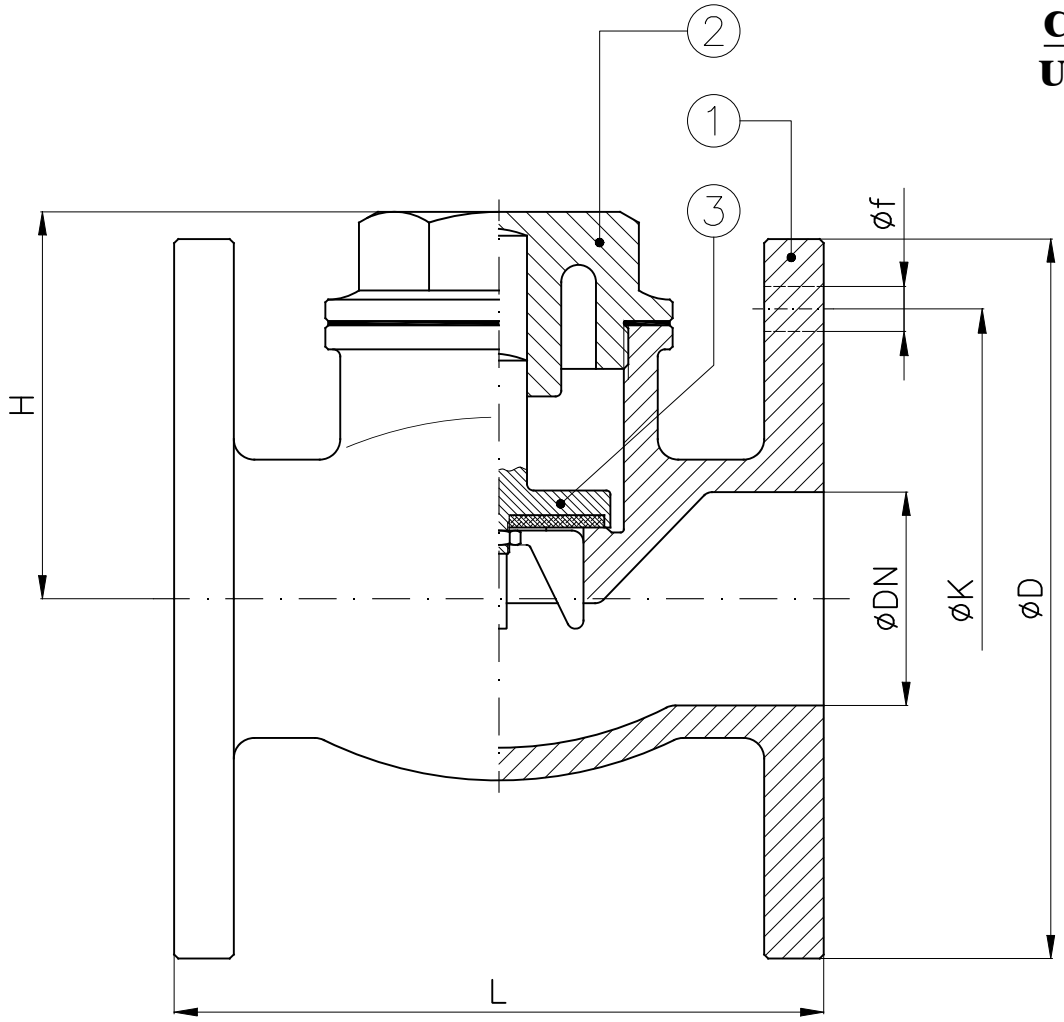

			PN6 – NP6				PN16 – NP16				
DN	H	L	D	K	f	Holes No. f	D	K	f	Holes No. f	Weight (Kg)
15	47	70	80	55	11	4	95	65	14	4	1.2
20	52	90	90	65	11	4	105	75	14	4	1.8
25	57	98	100	75	11	4	115	85	14	4	2.25
32	70	110	120	90	14	4	140	100	18	4	3.5
40	75	130	130	100	14	4	150	110	18	4	4.3
50	82	150	140	110	14	4	165	125	18	4	5.8
65	92	190	160	130	14	4	185	145	18	4	9.2
80	100	210	190	150	18	4	200	160	18	8	11.5
100	110	220	210	170	18	4	220	180	18	8	16.5

Combinazione materiali standard – Standard materials Combination		
		B/O
ITEM	DENOMINAZIONE DENOMINATION	MATERIALE MATERIAL
01	Body	Bronze UNI EN1982 G-CuSn5Zn5Pb5
02	Bonnet	Brass CW617N (OT58)
03	Disc	Brass CW617N (OT58)
Nota: Combinazioni materiali non standard a richiesta Note: Non standard materials combinations on request		

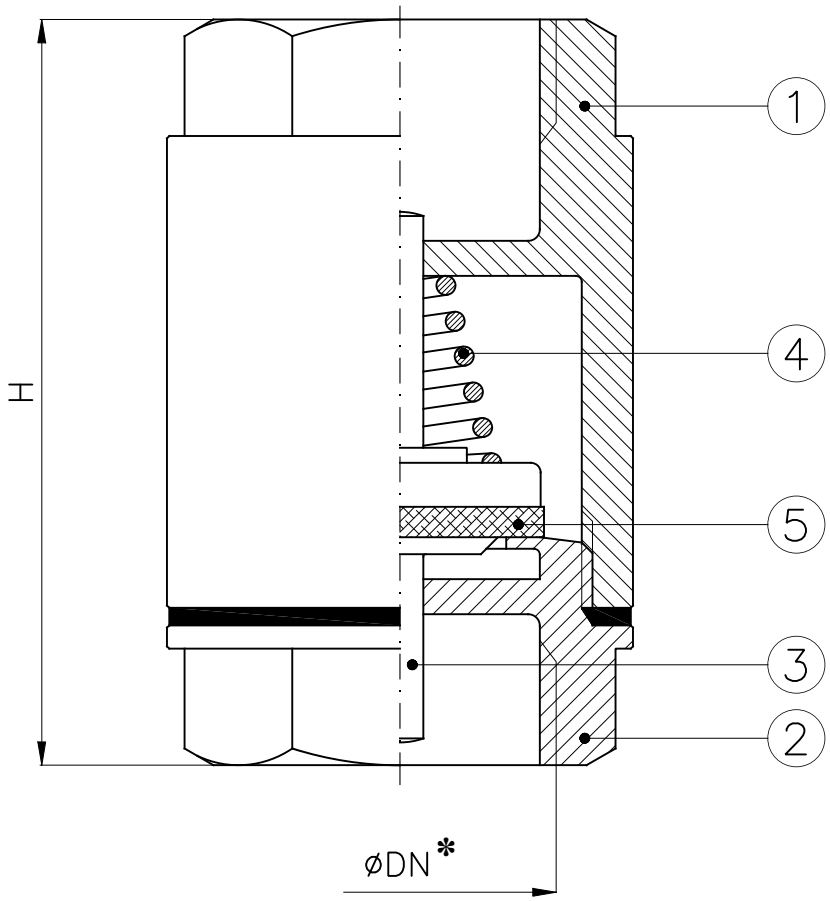

*: Filettatura GAS
*: *BSPP threaded*

DN	H	Weight (Kg)
3/8"	45	0.10
1/2"	45	0.11
3/4"	50	0.18
1"	58	0.26
1"1/4	64	0.36
1"1/2	69	0.52
2"	77	0.75
2"1/2	87	1.5
3"	102	1.8
4"	112	3.2

Combinazione materiali standard – Standard materials Combination		
		O/NYLON
ITEM	DENOMINAZIONE DENOMINATION	MATERIALE MATERIAL
01	Body	Brass CW617N (OT58)
02	Body end	Brass CW617N (OT58)
03	Disc	Nylon
04	Spring	Stainless steel AISI302 UNI EN10088
05	Gasket	NBR
Nota: Combinazioni materiali non standard a richiesta Note: Non standard materials combinations on request		

Valvole di ritegno verticale PN16 in ghisa tenuta gomma
Vertical check valves NP16 cast iron rubber seal

Art.26

Conform to:
UNI EN1092

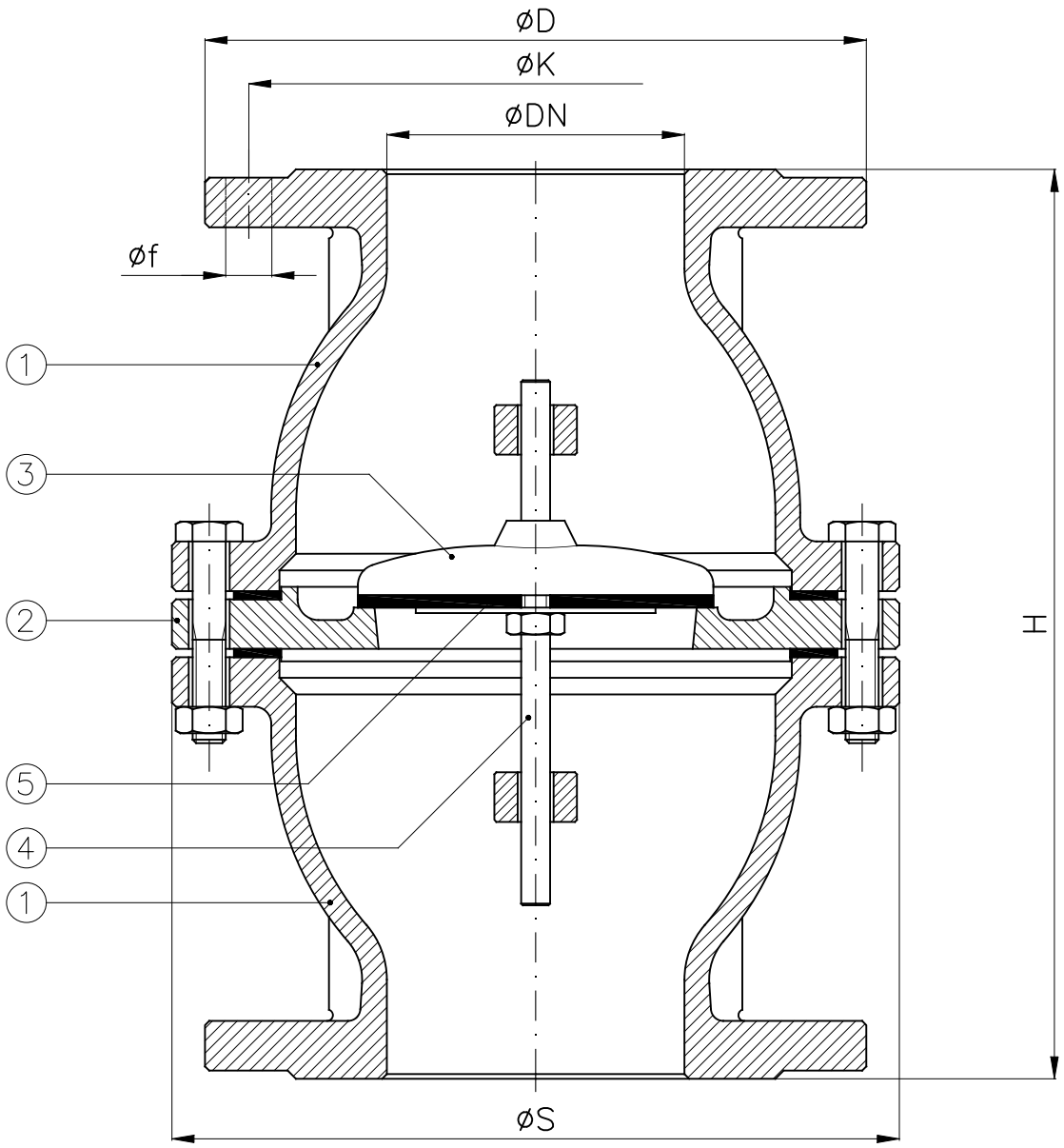

DN	H	S	D	K	f	Holes NO. f	Weight (Kg)
40	180	150	150	110	18	4	7
50	200	165	165	125	18	4	11
65	240	185	185	145	18	4	14
80	260	200	200	160	18	8	18
100	300	240	220	180	18	8	24
125	350	275	250	210	18	8	35
150	400	315	285	240	22	8	49
200	500	390	340	295	22	12	81
250	600	485	405	355	26	12	153
300	700	565	460	410	26	12	216

Combinazione materiali standard – Standard materials Combination		
		G/O
ITEM	DENOMINAZIONE DENOMINATION	MATERIALE MATERIAL
01	Body	Cast iron UNI EN1561 EN-GJL-250
02	Seat disc	Cast iron UNI EN1561 EN-GJL-250
03	Disc	Cast iron UNI EN1561 EN-GJL-250
04	Slide bar	Brass CW617N (OT58)
05	Gasket	Fiber reinforced rubber
Nota: Combinazioni materiali non standard a richiesta Note: Non standard materials combinations on request		

Valvole di ritegno da barra
Barstock check valves

Art. MG100
Art. MG100VR

DN 1/4"÷3/8"

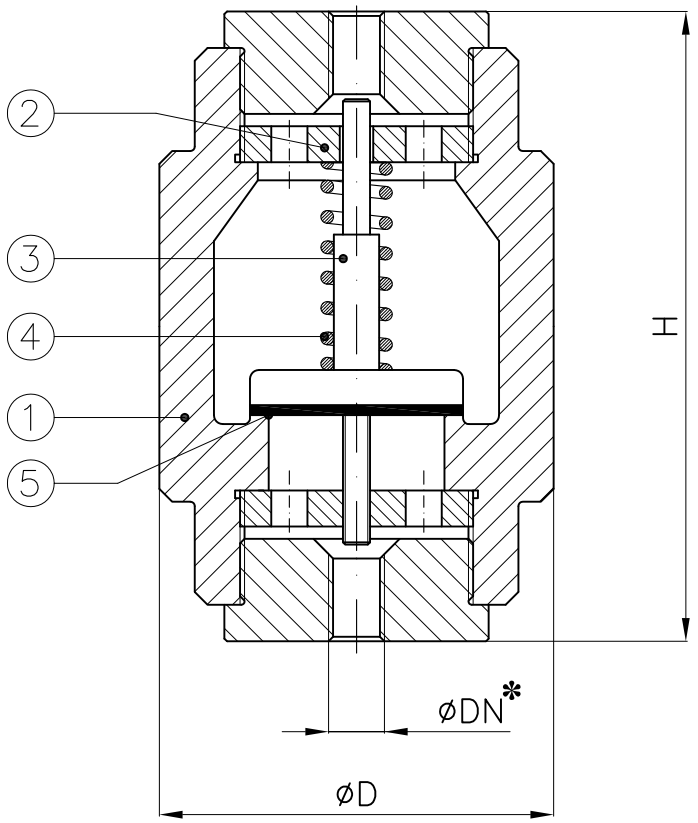

DN 1/2"÷2"

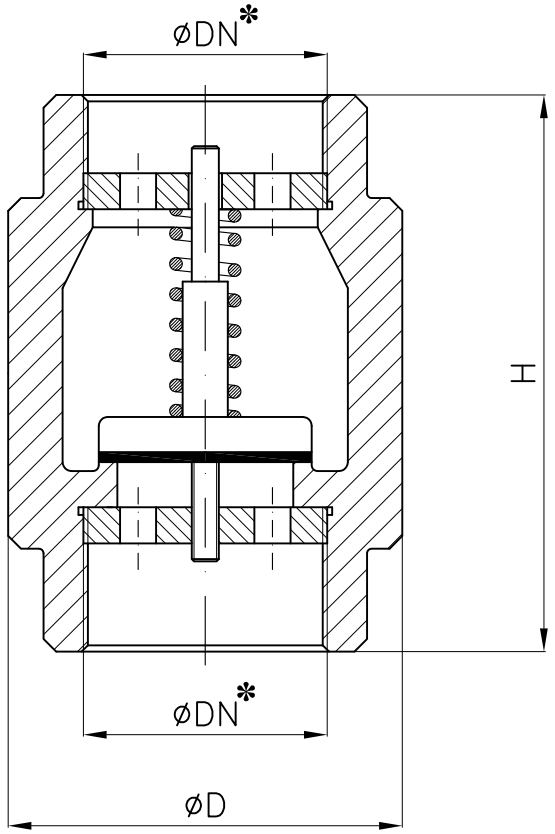

*: Filettatura GAS

*: *BSPP threaded*

MG100			MG100 VR	
DN	D	H (~)	D	H (~)
1/4"	40	98	–	–
3/8"	40	98	–	–
1/2"	40	65	35	80
3/4"	50	75	42	80
1"	50	80	52	90
1"1/4	60	90	55	95
1"1/2	70	95	65	110
2"	80	100	80	118

Combinazione materiali standard – Standard materials Combination			
		A/316	316/316
ITEM	DENOMINAZIONE DENOMINATION	MATERIALE MATERIAL	MATERIALE MATERIAL
01	Body	Forged steel ASTM A105N	Stainless steel AISI316 UNI EN10088
02	Ring nut	Forged steel ASTM A105N	Stainless steel AISI316L UNI EN10088
03	Stem	Stainless steel AISI316L UNI EN10088	Stainless steel AISI316L UNI EN10088
04	Spring	Stainless steel AISI316 UNI EN10088	Stainless steel AISI316 UNI EN10088
05	Gasket	PTFE	PTFE

Nota: Combinazioni materiali non standard a richiesta
Note: Non standard materials combinations on request

Valvole di ritegno a spillo serie 3000
Check needle valves class 3000

Art.MG340

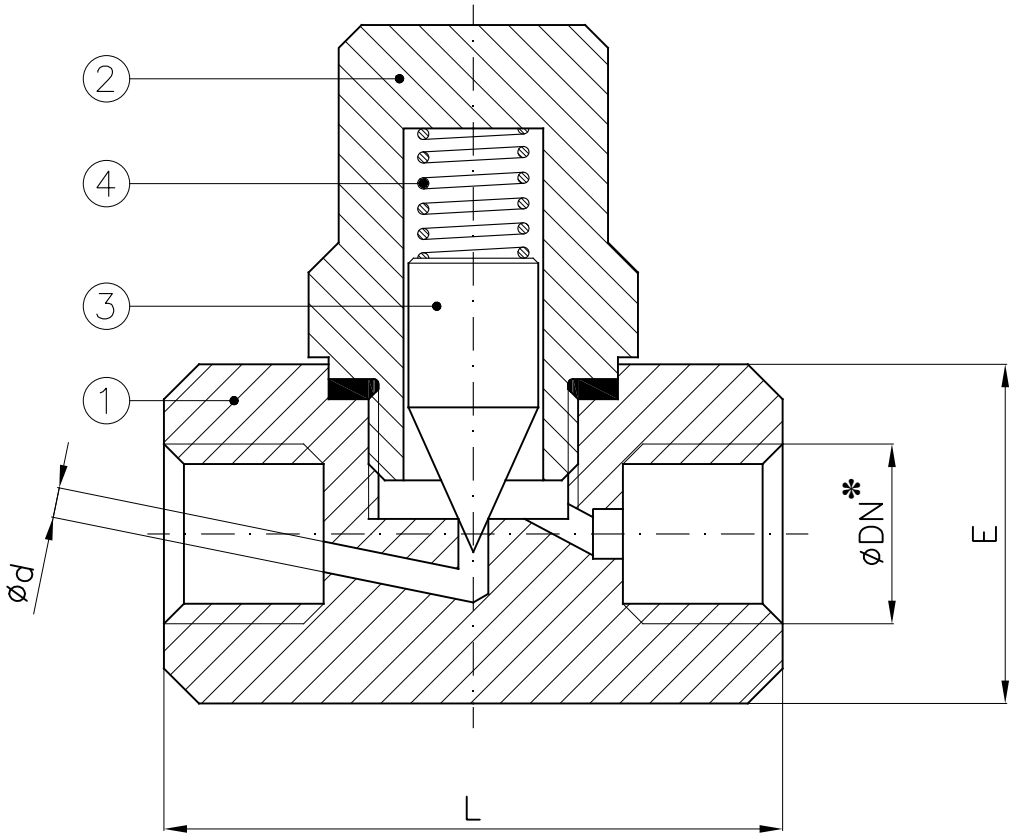

✻: Filettatura GAS

✻: *BSPP threaded*

DN	d	E	L
1/4"	5	30	60
3/8"	6	30	60
1/2"	6	30	60
3/4"	7.5	35	70
1"	9	40	75
1"1/4	11.5	50	90
1"1/2	16	60	100
2"	19	70	120

Combinazione materiali standard – Standard materials Combination			
		A/316	316/316
ITEM	DENOMINAZIONE DENOMINATION	MATERIALE MATERIAL	MATERIALE MATERIAL
01	Body	Forged steel ASTM A105N	Stainless steel AISI316 UNI EN10088
02	Bonnet	Forged steel ASTM A105N	Stainless steel AISI316L UNI EN10088
03	Disc	Stainless steel AISI316L UNI EN10088	Stainless steel AISI316L UNI EN10088
04	Spring	Stainless steel AISI316 UNI EN10088	Stainless steel AISI316 UNI EN10088
Nota: Combinazioni materiali non standard a richiesta Note: Non standard materials combinations on request			

Valvole di ritegno in acciaio inox AISI316, serie PN16
Stainless steel AISI316 check valves, class NP16

Art.1022G

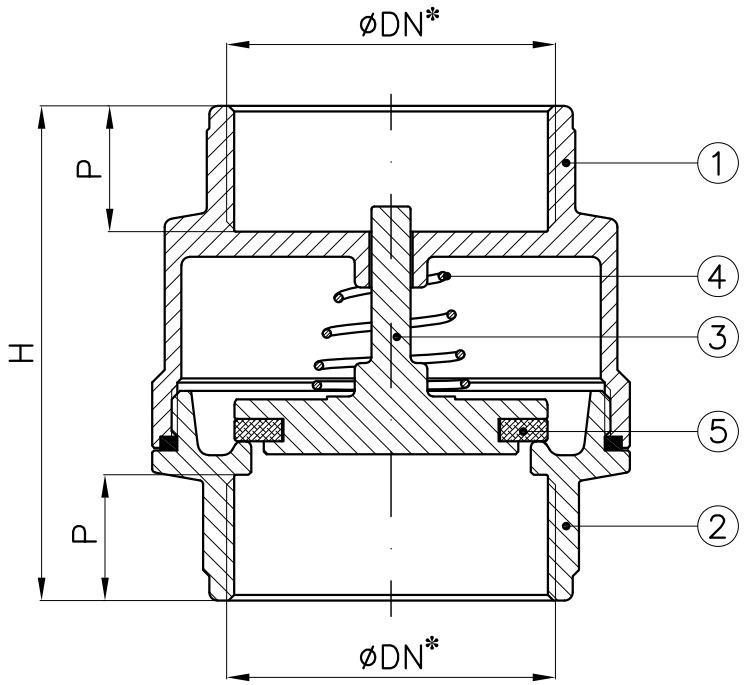

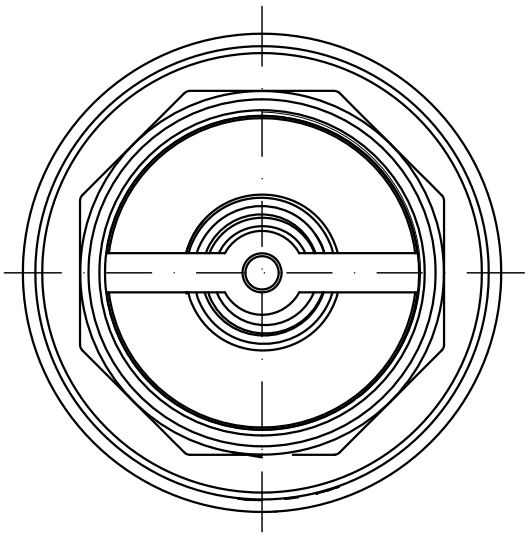

✻: Filettatura GAS
✻: *BSPP threaded*

DN	H	P
1/2"	53.5	13.5
3/4"	58	14.5
1"	65	16
1"1/4	72.5	18.5
1"1/2	76	18.5
2"	88.5	22.5

Combinazione materiali standard – Standard materials Combination		
		316/316
ITEM	DENOMINAZIONE DENOMINATION	MATERIALE MATERIAL
01	Body	Stainless steel AISI316 UNI EN10088
02	Body end	Stainless steel AISI316 UNI EN10088
03	Disc	Stainless steel AISI316 UNI EN10088
04	Spring	Stainless steel AISI316 UNI EN10088
05	Gasket	NBR
Nota: Combinazioni materiali non standard a richiesta Note: Non standard materials combinations on request		

Valvole di ritegno in acciaio inox AISI316, serie PN16
Stainless steel AISI316 check valves, class NP16

Art.1020M

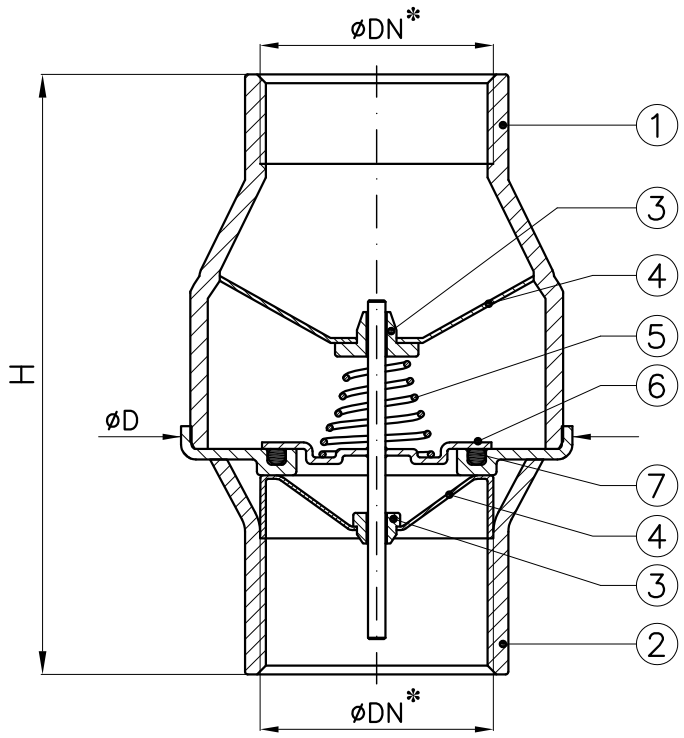

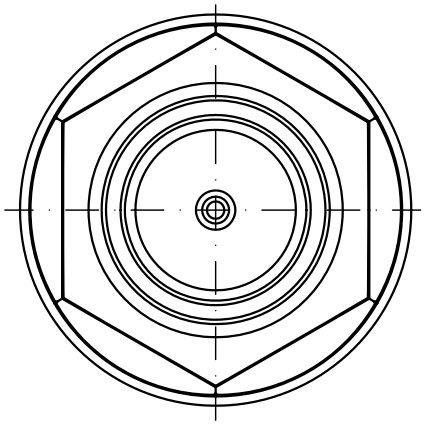

*: Filettatura GAS
*: *BSPP threaded*

DN	H	D
2"1/2	142	113
3"	160	132

Combinazione materiali standard – Standard materials Combination		
		316/316
ITEM	DENOMINAZIONE DENOMINATION	MATERIALE MATERIAL
01	Body end	Stainless steel AISI316 UNI EN10088
02	Body in	Stainless steel AISI316 UNI EN10088
03	Guide bush	PTFE
04	Flow control disc guide	Stainless steel AISI316 UNI EN10088
05	Spring	Stainless steel AISI316 UNI EN10088
06	Disc	Stainless steel AISI316 UNI EN10088
07	Seal ring	VITON or PTFE
Nota: Combinazioni materiali non standard a richiesta Note: Non standard materials combinations on request		

Valvole a clapet PN6 - PN16

Swing check valves NP6 - NP16

Tab.134

RF FLANGES: A/GS

FF FLANGES: B/G

Conform to:

UNI EN1092
NE407210
NE407230

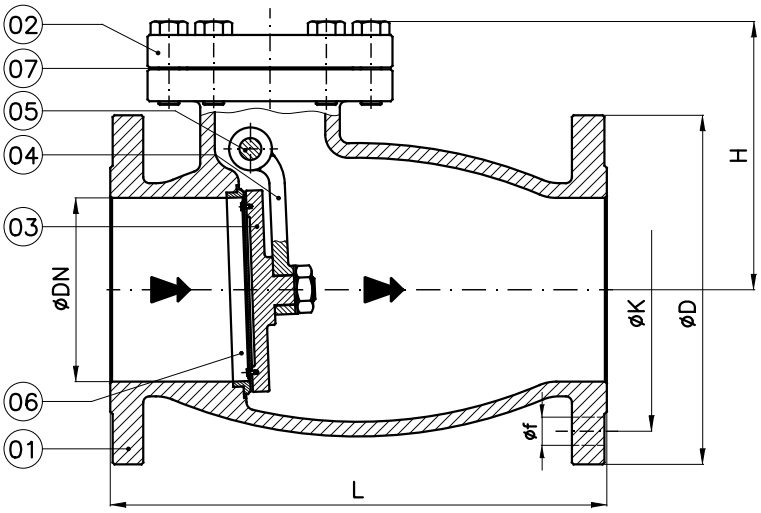

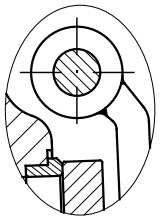

Exec.1 – Sede metallica
Metal seat

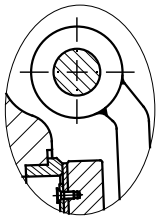

Exec.2 – Sede di tenuta in gomma
Disc seat ring in rubber

Exec.3 – Montaggio orizzontale
Con leva e contrappeso
Horizontal mounting
With lever and counterweight

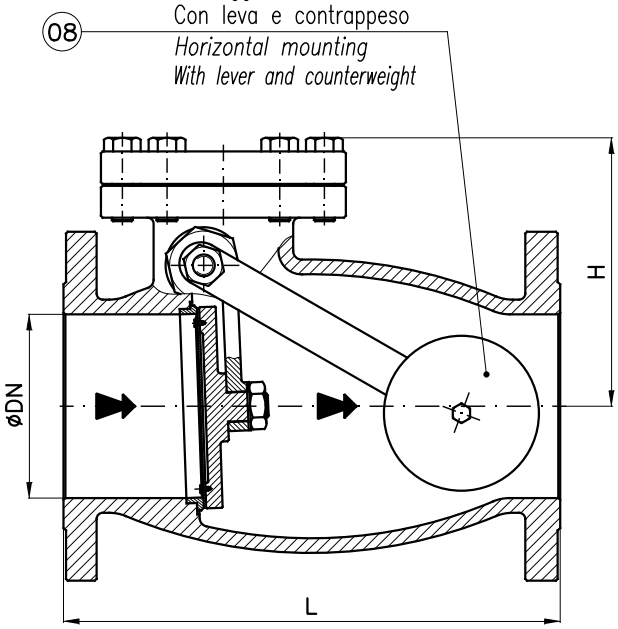

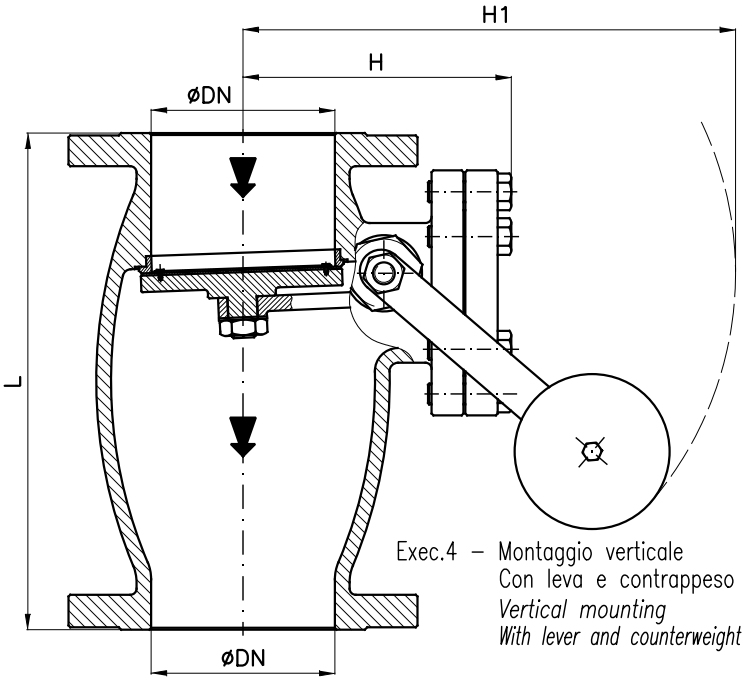

Exec.4 – Montaggio verticale
Con leva e contrappeso
Vertical mounting
With lever and counterweight

✻: Per fusioni in ghisa (G), L=180
✻: *For cast iron material (G), L=180*

				PN6					PN16				
DN	H (~)	H1 (~)	L	D	K	f	Holes NO. f	Exec.1 Weight (Kg)	D	K	f	Holes NO. f	Exec.1 Weight (Kg)
40*	135	260	200	130	100	14	4	8	150	110	18	4	9
50	135	270	200	140	110	14	4	10	165	125	18	4	11
65	155	420	240	160	130	14	4	16	185	145	18	4	19
80	165	430	260	190	150	18	4	17	200	160	18	8	21
100	180	450	300	210	170	18	4	30	220	180	18	8	32
125	220	470	350	240	200	18	8	40	250	210	18	8	42
150	245	550	400	265	225	18	8	65	285	240	22	8	69
200	275	640	500	320	280	18	8	90	340	295	22	12	93
250	320	745	600	375	335	18	12	152	405	355	26	12	
300	410	950	700	440	395	22	12	221	460	410	26	12	
350				490	445	22	12		520	470	26	16	
400				540	495	22	16		580	525	30	16	
450				595	550	22	16		640	585	30	20	

Combinazione materiali standard – Standard materials Combination				
		A/316	B/316	B/B
ITEM	DENOMINAZIONE DENOMINATION	MATERIALE MATERIAL	MATERIALE MATERIAL	MATERIALE MATERIAL
01	Body	Cast steel GP240-GH UNI EN10213	Bronze UNI EN1982 G-CuSn5Zn5Pb5	Bronze UNI EN1982 G-CuSn5Zn5Pb5
02	Bonnet	Cast steel GP240-GH UNI EN10213	Bronze UNI EN1982 G-CuSn5Zn5Pb5	Bronze UNI EN1982 G-CuSn5Zn5Pb5
03	Disc (≤ DN80)	Stainless steel AISI316 UNI EN10088	Bronze UNI EN1982 G-CuSn5Zn5Pb5	Bronze UNI EN1982 G-CuSn5Zn5Pb5
03	Disc (≥ DN100)	Cast steel GP240-GH UNI EN10213 plus AISI316 facing welding	Bronze UNI EN1982 G-CuSn5Zn5Pb5	Bronze UNI EN1982 G-CuSn5Zn5Pb5
04	Lever	Steel Fe360B (S235JRC) UNI EN10025	Bronze UNI EN1982 G-CuSn5Zn5Pb5	Bronze UNI EN1982 G-CuSn5Zn5Pb5
05	Pin	Stainless steel AISI316 UNI EN10088	Stainless steel AISI316 UNI EN10088	Brass CW617N (OT58)
06	Disc seat	Stainless steel AISI316 UNI EN10088	Bronze UNI EN1982 G-CuSn5Zn5Pb5	Bronze UNI EN1982 G-CuSn5Zn5Pb5
07	Gasket	Planiflex KG carbo/C PF81	Planiflex KG carbo/C PF81	Planiflex KG carbo/C PF81
08	Adjustable counterweight	Cast iron UNI EN1561 EN-GJL-250	Cast iron UNI EN1561 EN-GJL-250	Cast iron UNI EN1561 EN-GJL-250
Nota: Combinazioni materiali non standard a richiesta Note: Non standard materials combinations on request				

Combinazione materiali standard – Standard materials Combination				
		G/316	G/B	GS/316
ITEM	DENOMINAZIONE DENOMINATION	MATERIALE MATERIAL	MATERIALE MATERIAL	MATERIALE MATERIAL
01	Body	Cast iron UNI EN1561 EN-GJL-250	Cast iron UNI EN1561 EN-GJL-250	Nodular cast iron EN-GJS-400-15U UNI EN1563
02	Bonnet	Cast iron UNI EN1561 EN-GJL-250	Cast iron UNI EN1561 EN-GJL-250	Nodular cast iron EN-GJS-400-15U UNI EN1563
03	Disc (≤ DN80)	Stainless steel AISI316 UNI EN10088	Bronze UNI EN1982 G-CuSn5Zn5Pb5	Stainless steel AISI316 UNI EN10088
03	Disc (≥ DN100)	Cast steel GP240-GH UNI EN10213 plus AISI316 facing welding	Bronze UNI EN1982 G-CuSn5Zn5Pb5	Cast steel GP240-GH UNI EN10213 plus AISI316 facing welding
04	Lever	Steel Fe360B (S235JRC) UNI EN10025	Steel Fe360B (S235JRC) UNI EN10025	Steel Fe360B (S235JRC) UNI EN10025
05	Pin	Stainless steel AISI316 UNI EN10088	Brass CW617N (OT58)	Stainless steel AISI316 UNI EN10088
06	Disc seat	Stainless steel AISI316 UNI EN10088	Brass CW509L (OT60)	Stainless steel AISI316 UNI EN10088
07	Gasket	Planiflex KG carbo/C PF81	Planiflex KG carbo/C PF81	Planiflex KG carbo/C PF81
08	Adjustable counterweight	Cast iron UNI EN1561 EN-GJL-250	Cast iron UNI EN1561 EN-GJL-250	Cast iron UNI EN1561 EN-GJL-250
Nota: Combinazioni materiali non standard a richiesta Note: Non standard materials combinations on request				

Valvole di ritegno a battente - Swing check valves
Classe / Class - ANSI150

Tab.186A

Conform to:
Test API 598
MSS SP61
ANSI B16.10
RF FLANGES

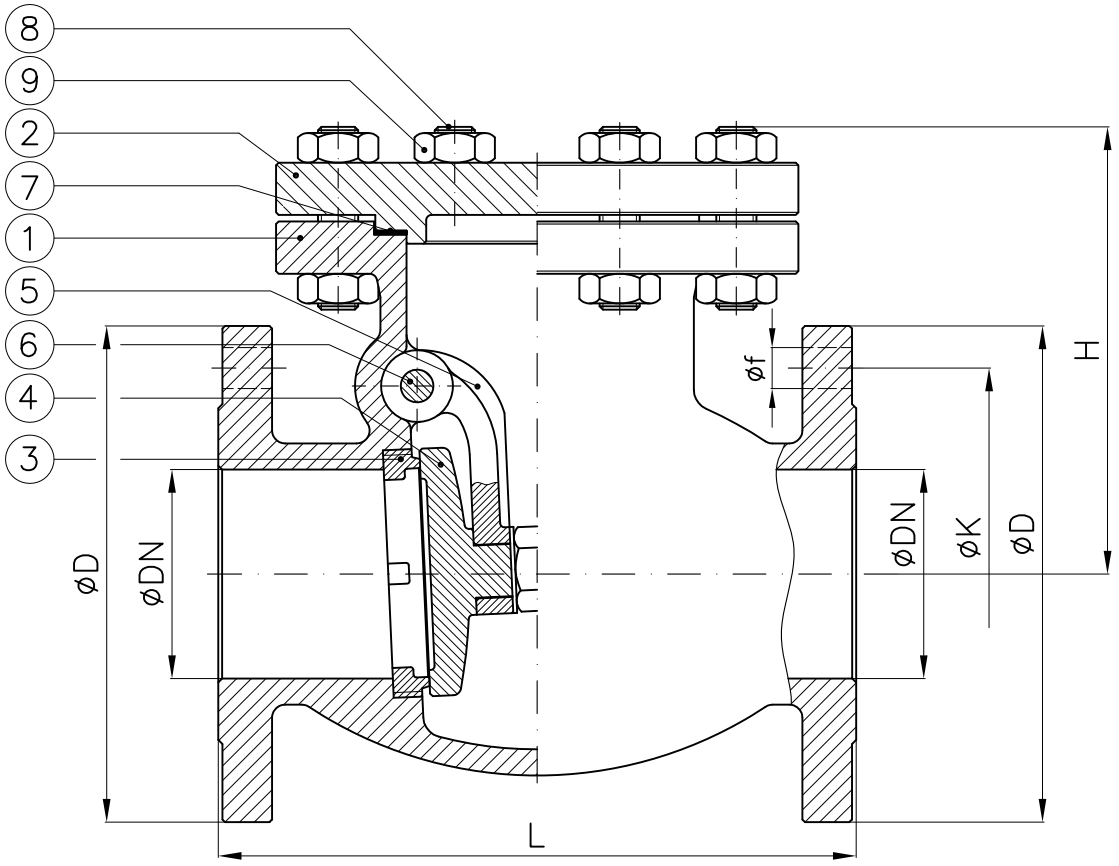

DN		H (~)	L	D	K	f	Holes NO. f	Weight (Kg)
1"1/2	40	135	203	127.0	98.4	16	4	
2"	50	135	203	152.4	120.6	19	4	15
2"1/2	65	160	216	177.8	139.7	19	4	
3"	80	170	241	190.5	152.4	19	4	
4"	100	180	292	228.6	190.5	19	8	
5"	125	200	330	254.0	215.9	22	8	58
6"	150	230	355	279.4	241.3	22	8	
8"	200	290	495	342.9	298.4	22	8	
10"	250	360	622	406.4	361.9	25	12	
12"	300	400	698	482.6	431.8	25	12	

Combinazione materiali standard – Standard Combination materials				
		A/316	A/420	CF8M/316
ITEM	DENOMINAZIONE DENOMINATION	MATERIALE MATERIAL	MATERIALE MATERIAL	MATERIALE MATERIAL
01	Body	Cast steel ASTM A216 WCB	Cast steel ASTM A216 WCB	Stainless steel ASTM A351 CF8M
02	Bonnet	Cast steel ASTM A216 WCB	Cast steel ASTM A216 WCB	Stainless steel ASTM A351 CF8M
03	Body seat	Stainless steel ASTM A182 (F316)	Stainless steel ASTM A182 (F6)	Stainless steel ASTM A182 (F316)
04	Disc (≤ DN3")	Stainless steel ASTM A182 (F316)	Stainless steel ASTM A182 (F6)	Stainless steel ASTM A182 (F316)
04	Disc (≥ DN4")	Cast steel ASTM A216 WCB plus A351 CF8M facing welding	Cast steel ASTM A216 WCB plus A182 (F6) facing welding	Stainless steel ASTM A351 CF8M
05	Lever	Cast steel ASTM A216 WCB	Cast steel ASTM A216 WCB	Stainless steel ASTM A182 (F316)
06	Pin	Stainless steel ASTM A182 (F316)	Stainless steel ASTM A182 (F316)	Stainless steel ASTM A182 (F316)
07	Gasket	Planiflex KG carbo/C PF81	Planiflex KG carbo/C PF81	Planiflex KG carbo/C PF81
08	Bonnet stud bolt	ASTM A193 B7	ASTM A193 B7	Stainless steel B8M
09	Nut	ASTM A194 2H	ASTM A194 2H	Stainless steel Gr.8M
Nota: Combinazioni materiali non standard a richiesta Note: Combinations non standard materials on request				

Valvole di ritegno a battente - Swing check valves

Classe / Class - ANSI150

Tab.186B

Conform to:

Test API 598
MSS SP61
ANSI B16.10
ANSI B16.24
FF or RF FLANGES

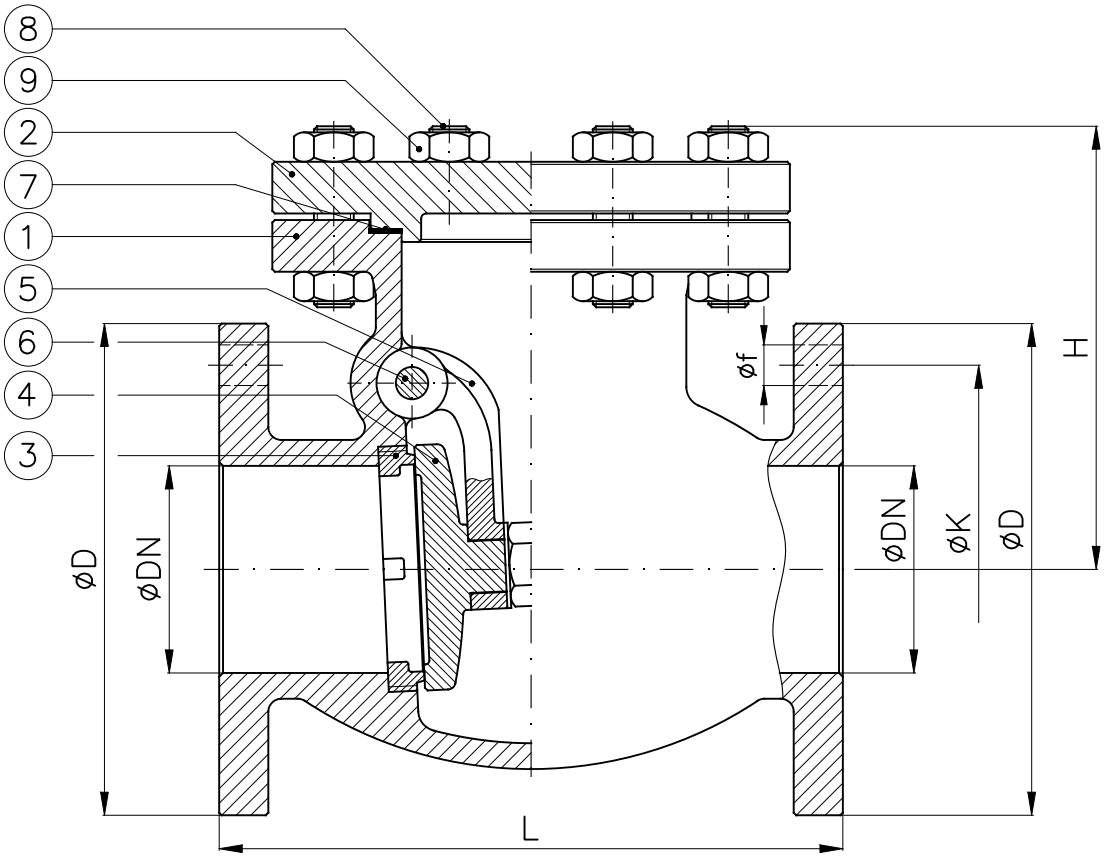

DN		H (~)	L	D	K	f	Holes NO. f	Weight (Kg)
1"1/2	40	135	180	127.0	98.4	16	4	12
2"	50	135	203	152.4	120.6	19	4	16
2"1/2	65	160	216	177.8	139.7	19	4	21
3"	80	170	241	190.5	152.4	19	4	26
4"	100	180	292	228.6	190.5	19	8	54
5"	125	200	330	254.0	215.9	22	8	82
6"	150	230	355	279.4	241.3	22	8	102
8"	200	290	495	342.9	298.4	22	8	177
10"	250	360	622	406.4	361.9	25	12	227
12"	300	400	698	482.6	431.8	25	12	

Combinazione materiali standard – Standard Combination materials				
		BA/BA	B/B	B/316
ITEM	DENOMINAZIONE DENOMINATION	MATERIALE MATERIAL	MATERIALE MATERIAL	MATERIALE MATERIAL
01	Body	Aluminum–Bronze ASTM B148	Bronze ASTM B62	Bronze ASTM B62
02	Bonnet	Aluminum–Bronze ASTM B148	Bronze ASTM B62	Bronze ASTM B62
03	Body seat	Aluminum–Bronze ASTM B148	Bronze ASTM B62	Stainless steel ASTM A182 (F316)
04	Disc	Aluminum–Bronze ASTM B148	Bronze ASTM B62	Stainless steel ASTM A182 (F316)
05	Lever	Aluminum–Bronze ASTM B148	Bronze ASTM B62	Bronze ASTM B62
06	Pin	Aluminum–Bronze ASTM B148	Bronze ASTM B62	Stainless steel ASTM A182 (F316)
07	Gasket	Planiflex KG carbo/C PF81	Planiflex KG carbo/C PF81	Planiflex KG carbo/C PF81
08	Bonnet stud bolt	Galvanized steel ASTM A193 B7 or S.S. B8M	Galvanized steel ASTM A193 B7 or S.S. B8M	Galvanized steel ASTM A193 B7 or S.S. B8M
09	Nut	Galvanized steel ASTM A194 2H or S.S. Gr.8M	Galvanized steel ASTM A194 2H or S.S. Gr.8M	Galvanized steel ASTM A194 2H or S.S. Gr.8M
Nota: Note:	Combinazioni materiali non standard a richiesta / Combinations non standard materials on request			

Valvole di ritegno a battente - Swing check valves

Classe / Class - ANSI150 - ANSI125

Tab.186G

Conform to:

Test API 598
MSS SP61
ANSI B16.10
FF or RF FLANGES

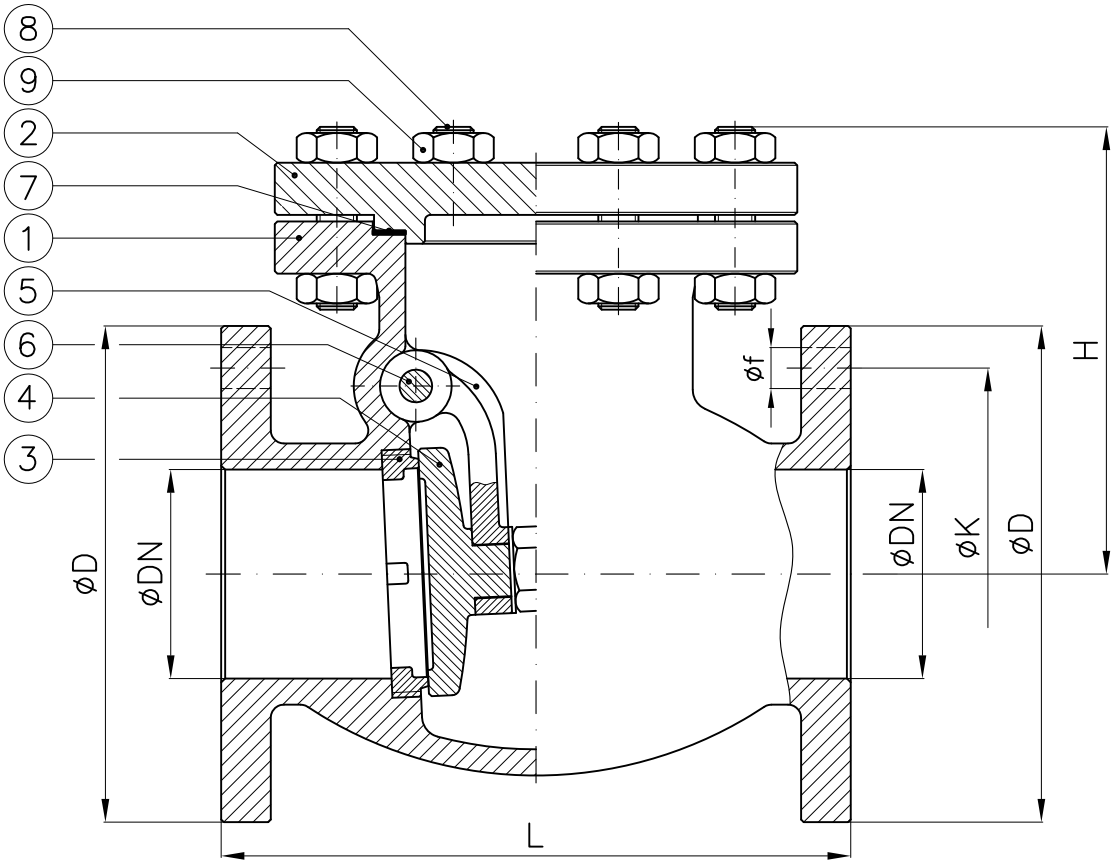

DN		H (≈)	L	D	K	f	Holes NO. f	Weight (Kg)
1"1/2	40	150	203	127.0	98.4	16	4	12
2"	50	150	203	152.4	120.6	19	4	14
2"1/2	70	170	216	177.8	139.7	19	4	20.5
3"	80	180	241	190.5	152.4	19	4	25
4"	100	210	292	228.6	190.5	19	8	42
5"	125	220	330	254.0	215.9	22	8	46
6"	150	260	355	279.4	241.3	22	8	68
8"	200	310	495	342.9	298.4	22	8	
10"	250	380	622	406.4	361.9	25	12	
12"	300	420	698	482.6	431.8	25	12	

Combinazione materiali standard – Standard Combination materials			
		G/316	G/B
ITEM	DENOMINAZIONE DENOMINATION	MATERIALE MATERIAL	MATERIALE MATERIAL
01	Body	Cast iron ASTM A126 GrB	Cast iron ASTM A126 GrB
02	Bonnet	Cast iron ASTM A126 GrB	Cast iron ASTM A126 GrB
03	Body seat	Stainless steel ASTM A182 (F316)	Bronze ASTM B62
04	Disc (≤ DN3")	Stainless steel ASTM A182 (F316)	Bronze ASTM B62
04	Disc (≥ DN4")	Cast steel ASTM A216 WCB plus A351 CF8M facing welding	Bronze ASTM B62
05	Lever	Cast iron ASTM A126 GrB	Cast iron ASTM A126 GrB
06	Pin	Stainless steel ASTM A182 (F316)	Brass CW617N (OT58)
07	Gasket	Planiflex KG carbo/C PF81	Planiflex KG carbo/C PF81
08	Bonnet stud bolt	ASTM A193 B7	ASTM A193 B7
09	Nut	ASTM A194 2H	ASTM A194 2H

Nota: Combinazioni materiali non standard a richiesta
Note: Combinations non standard materials on request

Valvole di ritegno a battente - Swing check valves
Classe / Class - ANSI150

Tab.186GS

Conform to:
Test API 598
MSS SP61
ANSI B16.10
FF or RF FLANGES

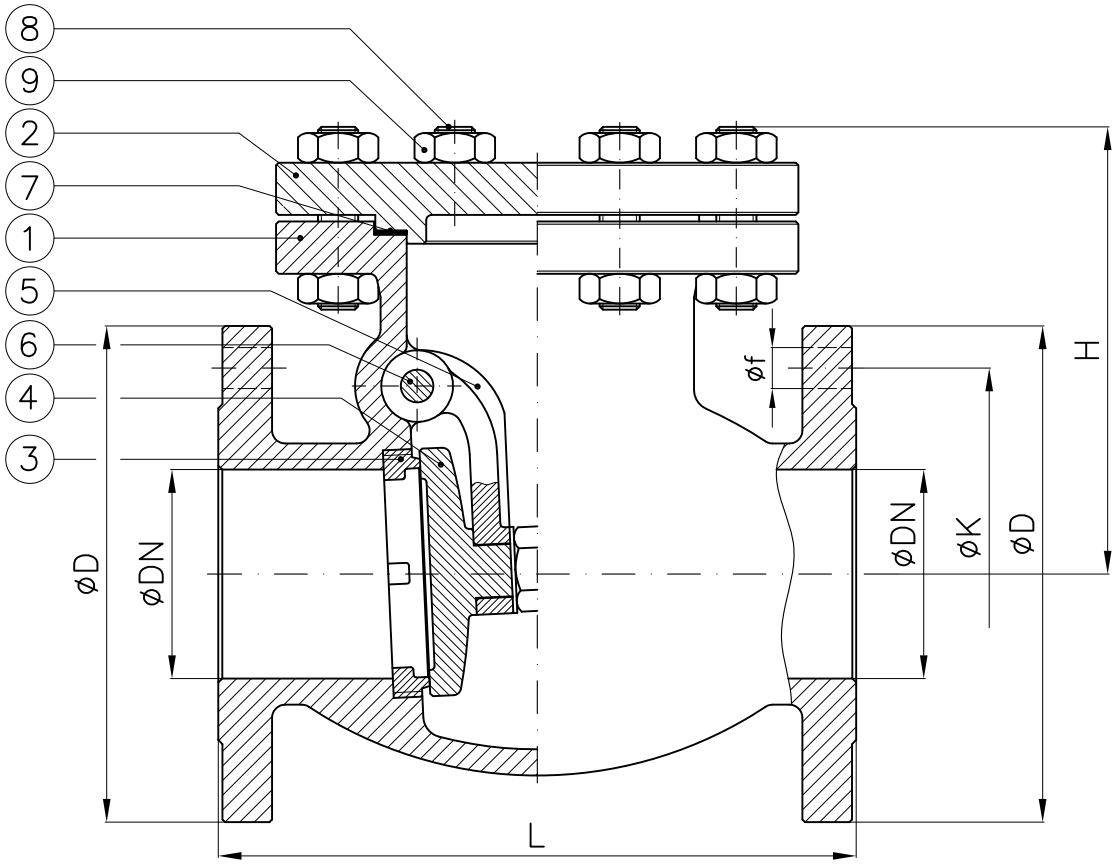

DN		H (~)	L	D	K	f	Holes NO. f	Weight (Kg)
1"1/2	40	150	203	127.0	98.4	16	4	13
2"	50	150	203	152.4	120.6	19	4	14
2"1/2	70	170	216	177.8	139.7	19	4	20.5
3"	80	180	241	190.5	152.4	19	4	25
4"	100	210	292	228.6	190.5	19	8	42
5"	125	220	330	254.0	215.9	22	8	46
6"	150	260	355	279.4	241.3	22	8	68
8"	200	310	495	342.9	298.4	22	8	146
10"	250	380	622	406.4	361.9	25	12	
12"	300	420	698	482.6	431.8	25	12	

Combinazione materiali standard – Standard Combination materials			
		GS/316	GS/B
ITEM	DENOMINAZIONE DENOMINATION	MATERIALE MATERIAL	MATERIALE MATERIAL
01	Body	Nodular cast iron ASTM A395	Nodular cast iron ASTM A395
02	Bonnet	Nodular cast iron ASTM A395	Nodular cast iron ASTM A395
03	Body seat	Stainless steel ASTM A182 (F316)	Bronze ASTM B62
04	Disc (≤ DN3")	Stainless steel ASTM A182 (F316)	Bronze ASTM B62
04	Disc (≥ DN4")	Cast steel ASTM A216 WCB plus A351 CF8M facing welding	Bronze ASTM B62
05	Lever	Nodular cast iron ASTM A395	Nodular cast iron ASTM A395
06	Pin	Stainless steel ASTM A182 (F316)	Brass CW617N (OT58)
07	Gasket	Planiflex KG carbo/C PF81	Planiflex KG carbo/C PF81
08	Bonnet stud bolt	ASTM A193 B7	ASTM A193 B7
09	Nut	ASTM A194 2H	ASTM A194 2H

Nota: Combinazioni materiali non standard a richiesta
Note: Combinations non standard materials on request

Valvole di ritegno serie ANSI150-300 RF, 800LBS SW-BW
Check valves type ANSI150-300 RF, 800LBS SW-BW

Tab.199S/P

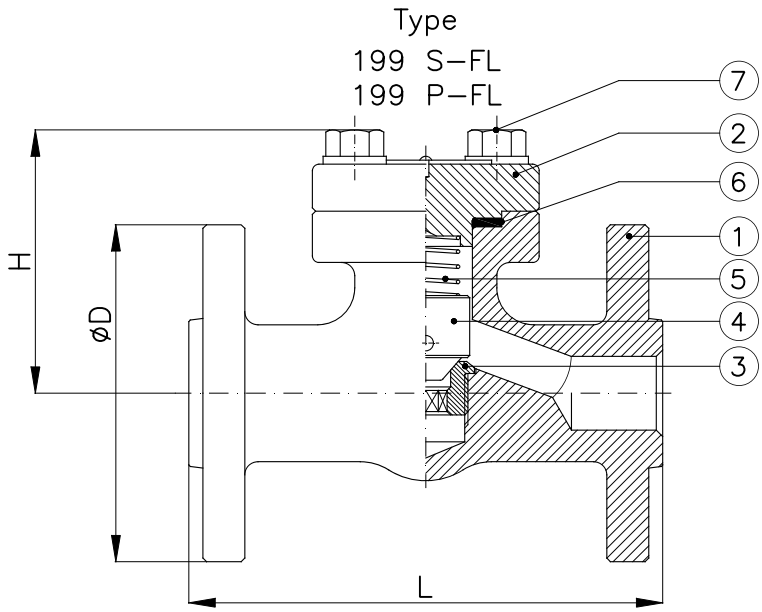

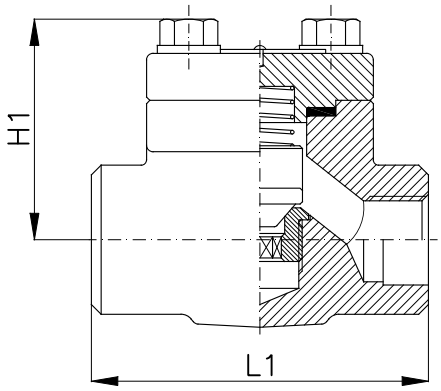

CLASS 800 (Piston)

Type
199 S (Swing)

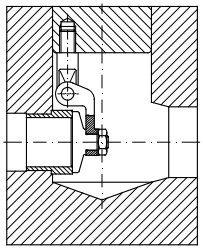

Type
199 P (Piston/Ball)

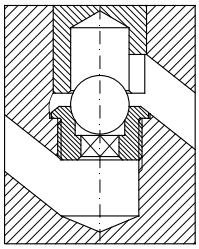

Combinazione materiali standard – Standard materials Combination			
		A/420	316/316
ITEM	DENOMINAZIONE DENOMINATION	MATERIALE MATERIAL	MATERIALE MATERIAL
01	Body	Forged steel ASTM A105N	Stainless steel ASTM A182 (F316)
02	Bonnet	Forged steel ASTM A105N	Stainless steel ASTM A182 (F316)
03	Body seat	Stainless steel A479 TP410	Stainless steel A479 TP316L
04	Disc	Stainless steel A479 TP410	Stainless steel A479 TP316L
05	Spring	Steel UNI EN10270	Stainless steel UNI EN10151
06	Gasket	F316 + Graphite	F316 + Graphite
07	Bonnet stud bolt	ASTM A193 B7	ASTM A193 B8
Nota: Note:	Combinazioni materiali non standard a richiesta Non standard materials combinations on request		

⁎ : Per valvole di ritegno a battente (199S–FL)
⁎ : For swing check type (199S–FL)

	ANSI150				ANSI300					CLASS 800			
DN	D	H	L	Weight (Kg)	D	H	L	L*	Weight (Kg)	H1	L1	L1*	Weight (Kg)
1/2”	88.9	70	108	2.6	95	50	152.5	152.5	7.8	–	–	–	–
3/4”	98.4	80	118	3.8	117	55	178	178	4.7	55	90	90	1.8
1”	108	92	127	5.1	124	70	203	216	5.7	70	110	110	2.6
1”1/4	–	–	–	–	133	–	–	–	–	77	127	127	3.6
1”1/2	127	100	165	8.9	156	98	229	241	11.8	105	130	130	5.5
2”	152	140	203	14.3	165	110	267	267	17	120	150	150	8.4

Exec.1 – Sede metallica – Metal seat

Exec.2 – Sede di tenuta in gomma
Disc seat ring in rubber

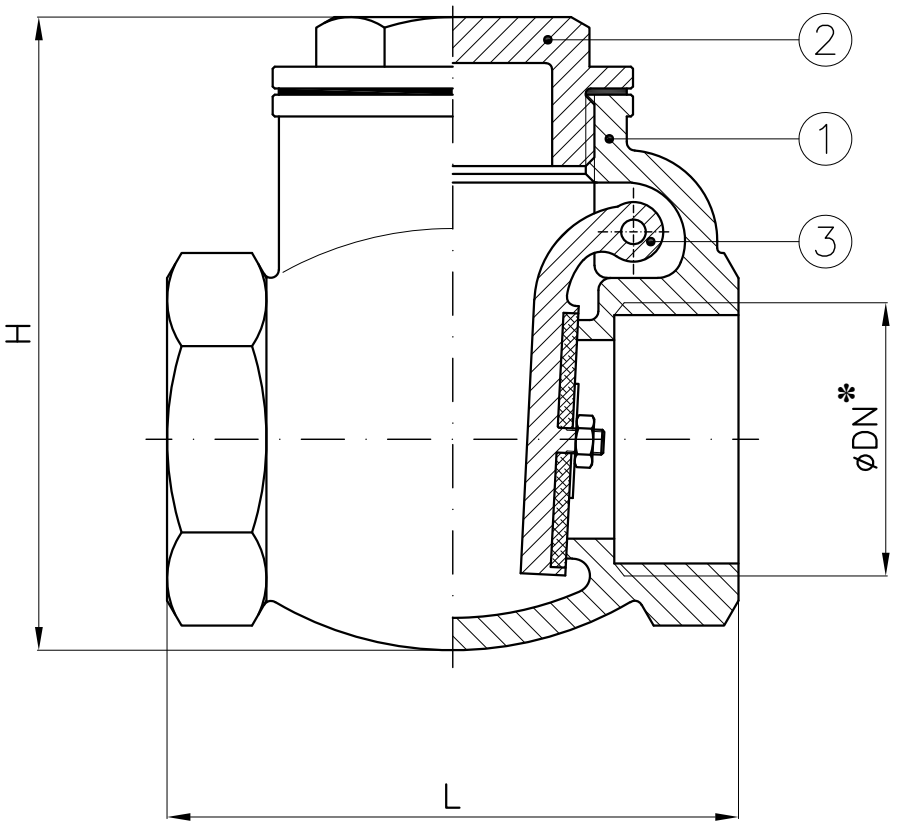

*: Filettatura GAS
*: *BSPP threaded*

DN	H (~)	L	Weight (Kg)
1/2"	53	55	0.2
3/4"	64	62	0.3
1"	73	72	0.5
1"1/4	85	82	0.6
1"1/2	95	90	0.9
2"	107	105	1.4
2"1/2	128	125	2.2
3"	145	144	3.4
4"	192	175	5

Combinazione materiali standard – Standard materials Combination		
		B/O
ITEM	DENOMINAZIONE DENOMINATION	MATERIALE MATERIAL
01	Body	Bronze UNI EN1982 G–CuSn5Zn5Pb5
02	Bonnet	Brass CW617N (OT58)
03	Disc	Brass CW617N (OT58)
Nota: Combinazioni materiali non standard a richiesta Note: Non standard materials combinations on request		

Valvole a battente sede metallica serie PN6-16
Swing check valves,metal sealing seat, class NP6-16

Art.8

Conform to:
UNI EN1092

Exec.1 – Sede metallica – Metal seat

Exec.2 – Sede di tenuta in gomma
Disc seat ring in rubber

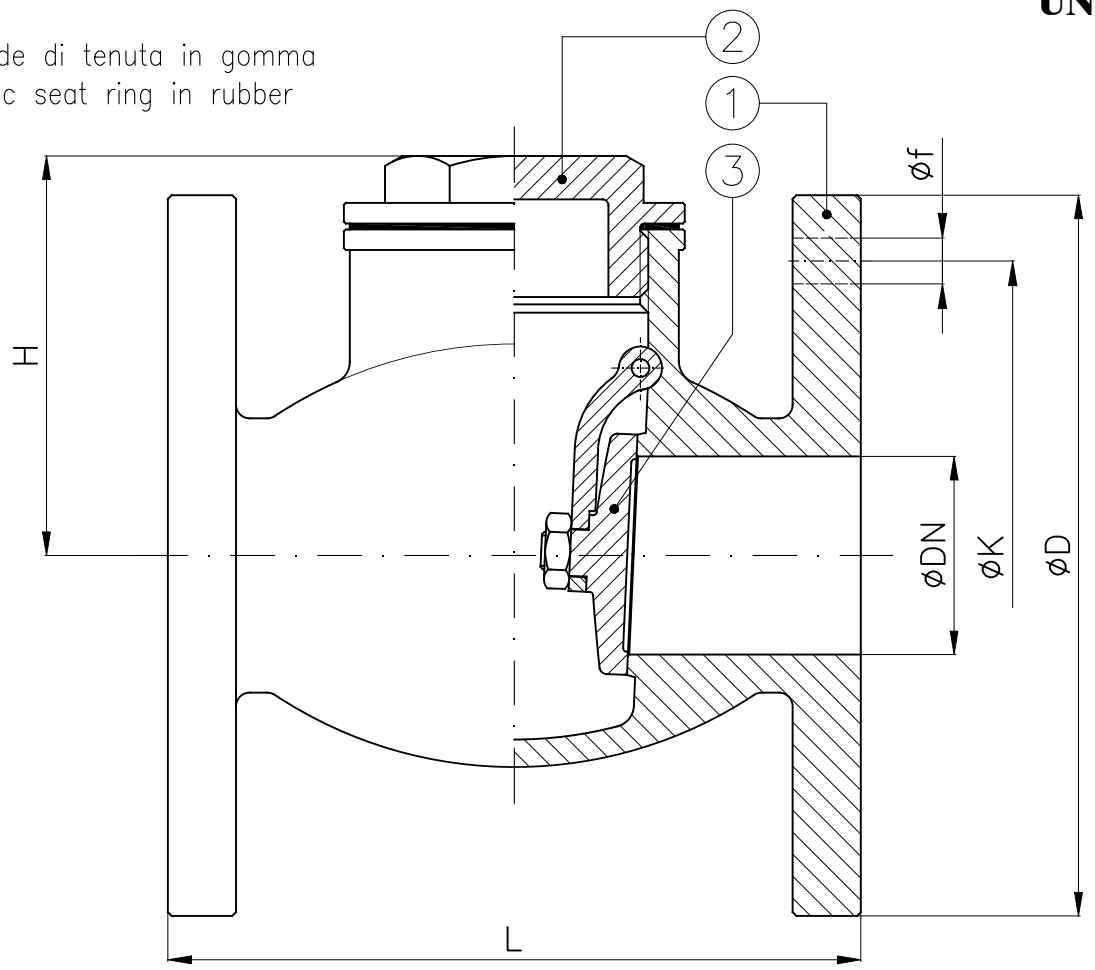

			PN6 – NP6				PN16 – NP16				
DN	H (~)	L	D	K	f	Holes No. f	D	K	f	Holes No. f	Weight (Kg)
15	48	90	80	55	11	4	95	65	14	4	1.5
20	48	90	90	65	11	4	105	75	14	4	1.8
25	52	99	100	75	11	4	115	85	14	4	2.5
32	59	110	120	90	14	4	140	100	18	4	3.7
40	75	130	130	100	14	4	150	110	18	4	4.5
50	83	150	140	110	14	4	165	125	18	4	5.7
65	98	175	160	130	14	4	185	145	18	4	9.4
80	110	180	190	150	18	4	200	160	18	8	10.4
100	112	220	210	170	18	4	220	180	18	8	13

Combinazione materiali standard – Standard materials Combination			
		B/B	B/O
ITEM	DENOMINAZIONE DENOMINATION	MATERIALE MATERIAL	MATERIALE MATERIAL
01	Body	Bronze UNI EN1982 G-CuSn5Zn5Pb5	Bronze UNI EN1982 G-CuSn5Zn5Pb5
02	Bonnet	Brass CW617N (OT58)	Brass CW617N (OT58)
03	Disc ≤ DN50		Brass CW617N (OT58)
03	Disc ≥ DN65	Bronze UNI EN1982 G-CuSn5Zn5Pb5	
Nota: Combinazioni materiali non standard a richiesta Note: Non standard materials combinations on request			

Valvole a clapet filettate classe 200 psi in acciaio inox AISI316
Class 200 psi threaded swing check valves stainless steel AISI316

Art.2030

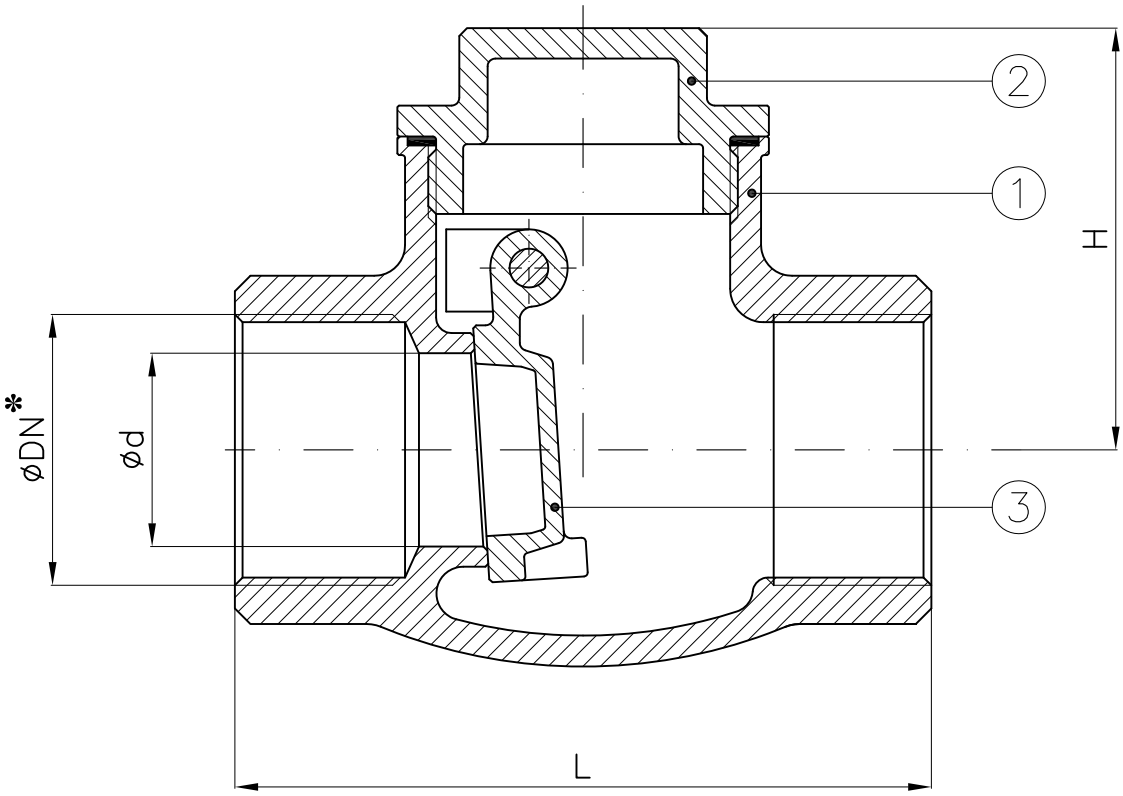

*: Filettatura GAS

*: *BSPP threaded*

DN	d	H	L
1/2"	15	44	65
3/4"	20	53	80
1"	25	58	90
1"1/4	32	62	105
1"1/2	40	73	120
2"	50	78	140

Combinazione materiali standard – Standard materials Combination		
		CF8M/CF8M
ITEM	DENOMINAZIONE DENOMINATION	MATERIALE MATERIAL
01	Body	Stainless steel CF8M ASTM A351
02	Bonnet	Stainless steel CF8M ASTM A351
03	Disc	Stainless steel CF8M ASTM A351
Nota: Combinazioni materiali non standard a richiesta Note: Non standard materials combinations on request		

Valvole a clapet flangiate classe 200 psi in acciaio inox AISI316
Class 200 psi flanged swing check valves stainless steel AISI316

Art.2030-FL

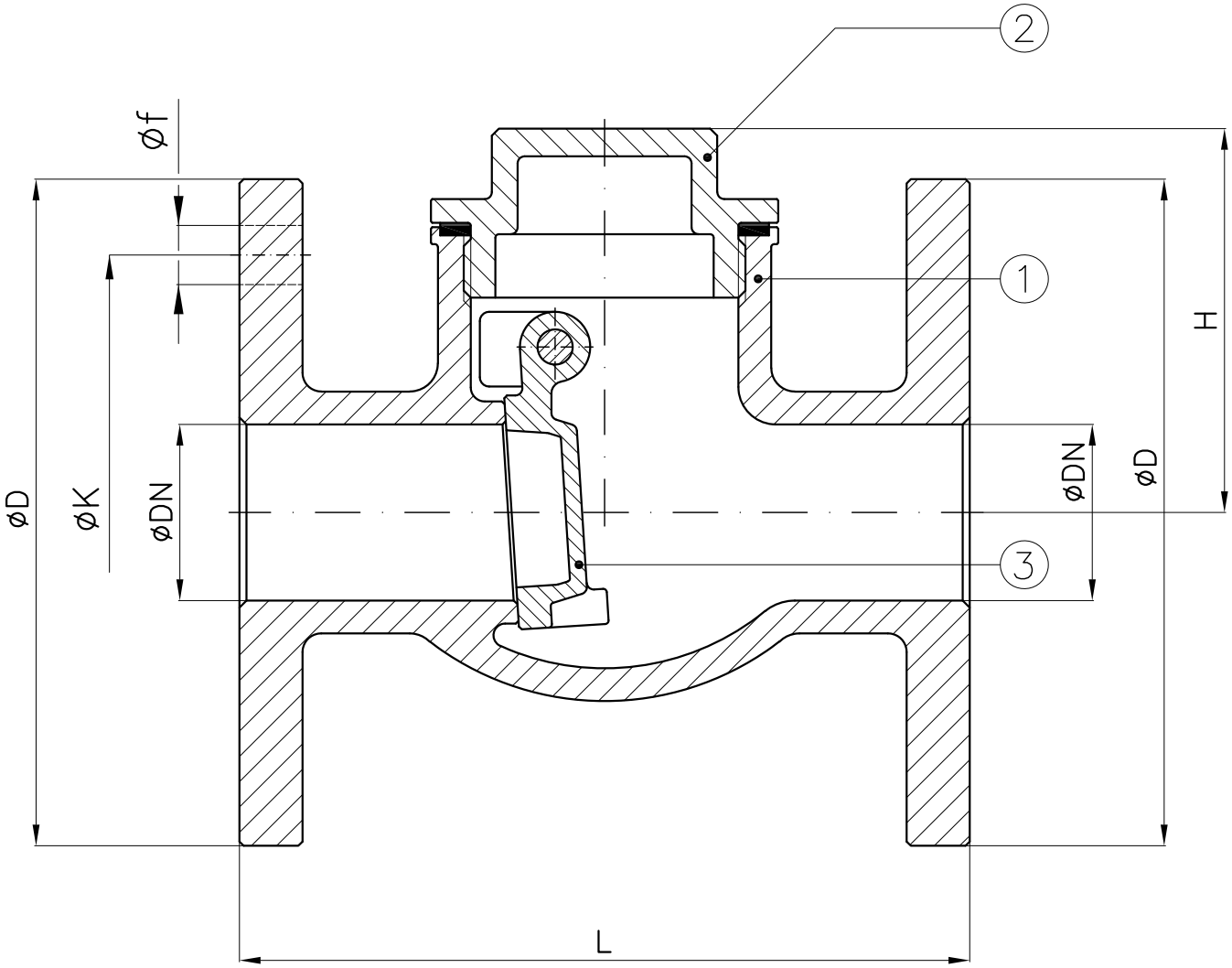

			PN6				PN16			
DN	H	L	D	K	f	Holes No. f	D	K	f	Holes No. f
15	44	95	80	55	11	4	95	65	14	4
20	53	115	90	65	11	4	105	75	14	4
25	58	125	100	75	11	4	115	85	14	4
32	62	140	120	90	14	4	140	100	18	4
40	73	160	130	100	14	4	150	110	18	4
50	78	180	140	110	14	4	165	125	18	4

Combinazione materiali standard – Standard materials Combination		
		CF8M/CF8M
ITEM	DENOMINAZIONE DENOMINATION	MATERIALE MATERIAL
01	Body	Stainless steel CF8M ASTM A351
02	Bonnet	Stainless steel CF8M ASTM A351
03	Disc	Stainless steel CF8M ASTM A351
Nota: Combinazioni materiali non standard a richiesta Note: Non standard materials combinations on request		

Valvole di ritegno a battente tipo Wafer PN6-25 ANSI150-300

Swing check valves Wafer type NP6-25 ANSI150-300

Tab.134/1

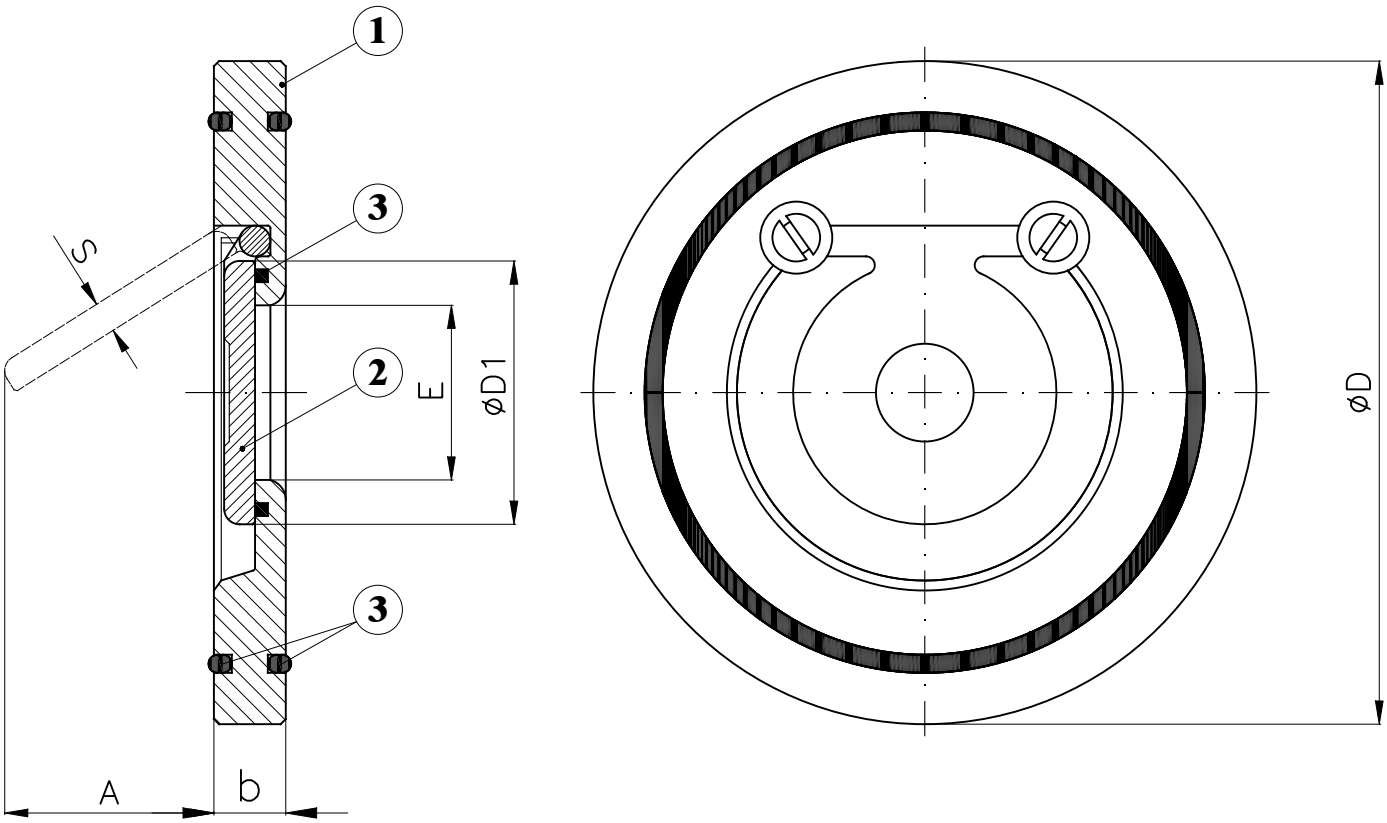

DN	INCH	A	D1	S	b	Weight (Kg)	UNI PN6		UNI PN10		UNI PN16		UNI PN25		ANSI150		ANSI300		
							D	E	D	E	D	E	D	E	D	E	b	D	E
32	1"1/4	20	27	5	14	0.6	78	17	84	17	84	17	84	17	76	17	14	84	17
40	1"1/2	30	35	5	14	0.7	88	22	95	22	95	22	95	22	86	22	14	95	22
50	2"	35	45	6	14	0.9	98	32	109	32	109	32	109	32	105	32	14	109	32
65	2"1/2	48	60	6	14	1.2	118	40	129	40	129	40	129	40	124	40	14	129	40
80	3"	60	72	6	14	1.5	134	54	144	54	144	54	144	54	137	54	14	144	54
100	4"	78	90	8	18	2.4	154	70	164	70	164	70	170	70	175	70	22	178	70
125	5"	98	109	9	18	3.4	184	92	195	92	195	92	198	92	195	92	23	213	92
150	6"	117	132	10	20	4.6	209	112	220	112	220	112	228	112	220	112	24	248	112
200	8"	160	177	10	22	7.5	264	154	275	154	275	154	285	154	279	154	30	306	154
250	10"	200	225	13	26	13.1	319	200	330	200	330	200	340	200	340	200	39	360	200
300	12"	235	268	15	32	20.4	375	240	380	240	387	240	403	240	410	240	53	420	240
350	14"	258	296	18	38	32	425	270	440	270	448	270	460	270	448	270	53	484	270
400	16"	300	340	20	44	48	475	310	490	310	495	310	514	310	514	310	53	539	310
450	18"	331	390	24	50	63	530	360	540	360	557	360	567	360	548	360	77	596	360
500	20"	368	435	28	56	87	580	405	595	405	617	405	624	405	605	405	86	653	405

Combinazione materiali standard – Standard materials Combination					
		A/A	A/316	CF8M/316	B/B
ITEM	DENOMINAZIONE DENOMINATION	MATERIALE MATERIAL	MATERIALE MATERIAL	MATERIALE MATERIAL	MATERIALE MATERIAL
01	Body	Galvanized Carbon steel GE240 UNI EN10293	Galvanized Carbon steel GE240 UNI EN10293	Stainless steel AISI316 UNI EN10088	Bronze UNI EN1982 G-CuSn5Zn5Pb5
02	Disc	Galvanized Cast steel GP240-GH UNI EN10213	Stainless steel CF8M ASTM A351	Stainless steel CF8M ASTM A351	Bronze UNI EN1982 G-CuSn5Zn5Pb5
03	Gasket (O-ring)	BUNA	BUNA	BUNA	BUNA

Nota: Combinazioni materiali non standard a richiesta
Note: Non standard materials combinations on request

Valvole di ritegno a battente con molla tipo Wafer PN6-40 ANSI150-300
Swing check valves with spring Wafer type NP6-40 ANSI150-300

Tab.134/1S

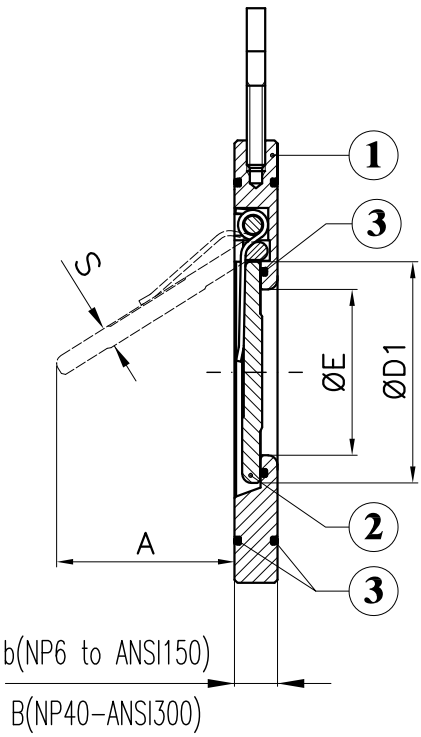

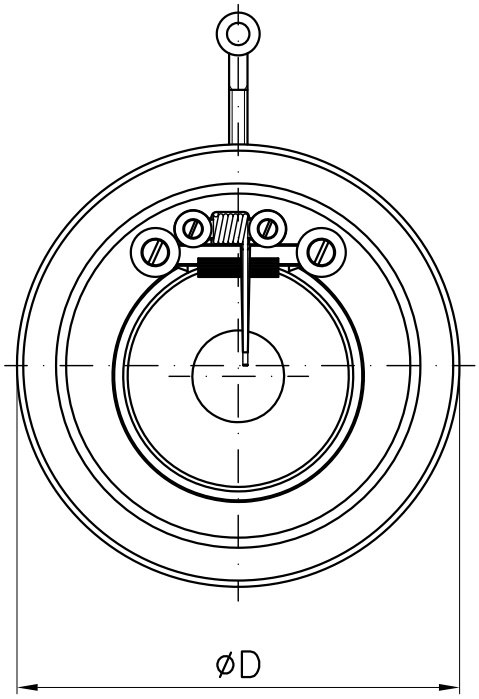

ND32-125 (WITH 1 SPRING)

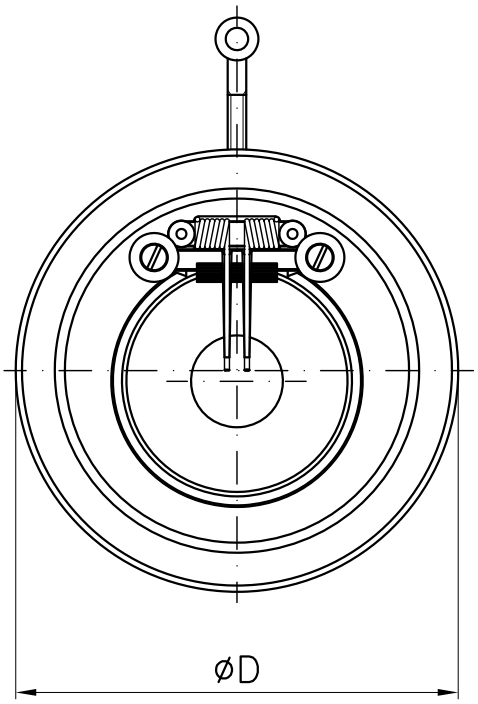

ND150-300 (WITH 2 SPRINGS)

DN	INCH	A	D1	S	b	UNI PN6		UNI PN10		UNI PN16		UNI PN25		ANSI150		Weight (Kg)	B	UNI PN40		ANSI300	
						D	E	D	E	D	E	D	E	D	E			D	E	D	E
32	1"1/4	20	27	5	14	78	17	84	17	84	17	84	17	76	17	0.6	14	84	17	84	17
40	1"1/2	30	35	5	14	88	22	95	22	95	22	95	22	86	22	0.7	14	95	22	95	22
50	2"	35	45	6	14	98	32	109	32	109	32	109	32	105	32	0.9	14	109	32	109	32
65	2"1/2	48	60	6	14	118	40	129	40	129	40	129	40	124	40	1.2	14	129	40	129	40
80	3"	60	72	6	14	134	54	144	54	144	54	144	54	137	54	1.5	14	144	54	144	54
100	4"	78	90	8	18	154	70	164	70	164	70	170	70	175	70	2.4	22	170	70	178	70
125	5"	98	109	9	18	184	92	195	92	195	92	198	92	195	92	3.4	23	198	92	213	92
150	6"	117	132	10	20	209	112	220	112	220	112	228	112	220	112	4.6	24	228	112	248	112
200	8"	160	177	10	22	264	154	275	154	275	154	285	154	279	154	7.5	30	293	154	306	154
250	10"	200	225	13	26	319	200	330	200	330	200	340	200	340	200	13.1	39	355	200	360	200
300	12"	235	268	15	32	375	240	380	240	387	240	403	240	410	240	20.4	53	420	240	420	240
350	14"	258	296	18	38	425	270	440	270	448	270	460	270	448	270	32	38	477	270	484	270

Combinazione materiali standard – Standard materials Combination					
		A/A	A/316	CF8M/316	B/B
ITEM	DENOMINAZIONE DENOMINATION	MATERIALE MATERIAL	MATERIALE MATERIAL	MATERIALE MATERIAL	MATERIALE MATERIAL
01	Body	Galvanized Carbon steel GE240 UNI EN10293	Galvanized Carbon steel GE240 UNI EN10293	Stainless steel AISI316 UNI EN10088	Bronze UNI EN1982 G-CuSn5Zn5Pb5
02	Disc	Galvanized Cast steel GP240-GH UNI EN10213	Stainless steel CF8M ASTM A351	Stainless steel CF8M ASTM A351	Bronze UNI EN1982 G-CuSn5Zn5Pb5
03	Gasket (O-ring)	BUNA	BUNA	BUNA	BUNA

Nota: Combinazioni materiali non standard a richiesta
Note: Non standard materials combinations on request

Tab.134/2

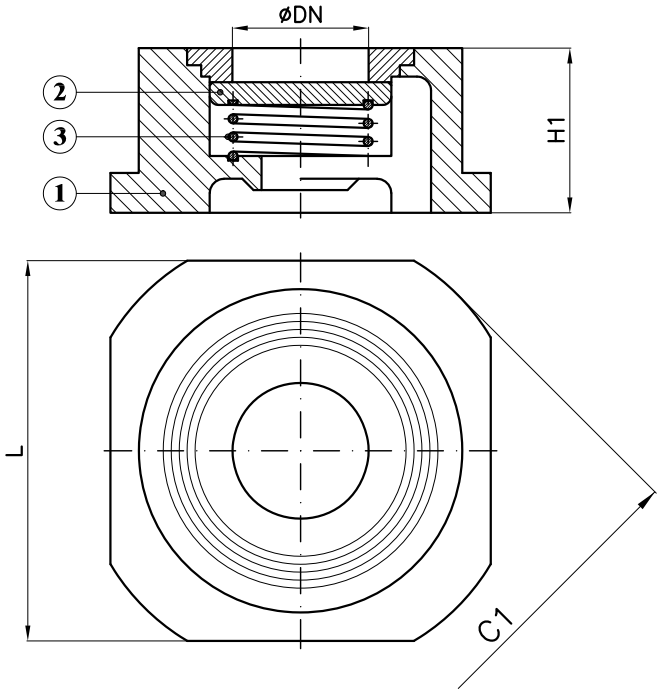

Rating
PN10–16–40–ANSI150

DN	15	20	25	32	40	50	65	80	100
C1	53	63	73	84	94	107	126	144	162
H1	16	19	22	28	32	40	46	50	60
L	45	55	65	78	88	98	118	134	154
Weight (Kg)	0.15	0.2	0.3	0.4	0.6	0.9	1.0	1.9	3.3

Tab.134/2-AL

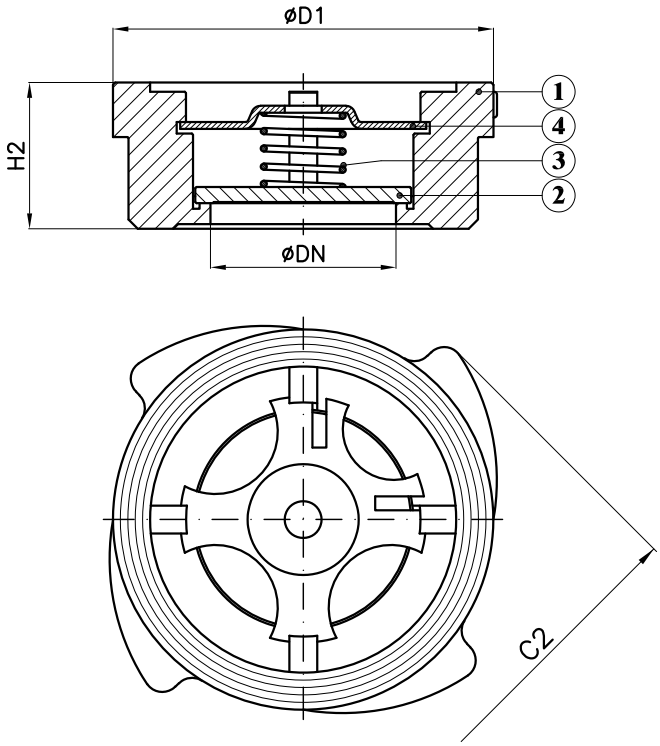

DN	32	40
C2	86	98
D1	72	82
H2	28	31.5
Weight (Kg)	0.5	0.7

Tab.134/2-OT

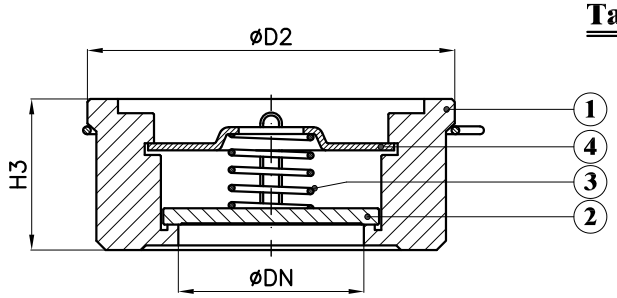

DN	15	20	25	32	40	50	65	80	100
D2	40	47	56	72	82	95	115	132	152
H3	16	19	22	28	31.5	40	46	50	60
Weight (Kg)	0.09	0.12	0.19	0.36	0.55	0.95	1.26	2.18	3.26

Combinazione materiali standard – Standard materials Combination

ITEM	DENOMINAZIONE DENOMINATION	Tab.134/2	Tab.134/2-AL	Tab.134/2-OT
		CF8M/316	O/316	O/316
		MATERIALE MATERIAL	MATERIALE MATERIAL	MATERIALE MATERIAL
01	Body	Stainless steel CF8M ASTM A351	Brass CW617N (OT58)	Brass CW617N (OT58)
02	Disc	Stainless steel AISI316 UNI EN10088	Stainless steel AISI316 UNI EN10088	Stainless steel AISI316 UNI EN10088
03	Spring	Stainless steel UNI EN10151	Stainless steel UNI EN10151	Stainless steel UNI EN10151
04	Segment	–	Stainless steel AISI316 UNI EN10088	Stainless steel AISI316 UNI EN10088

Nota: Combinazioni materiali non standard a richiesta
Note: Non standard materials combinations on request

Valvole di ritegno a doppio battente tipo wafer PN10-16

Non-return dual check valves, wafer type NP10-16

Tab.134/2
DUAL

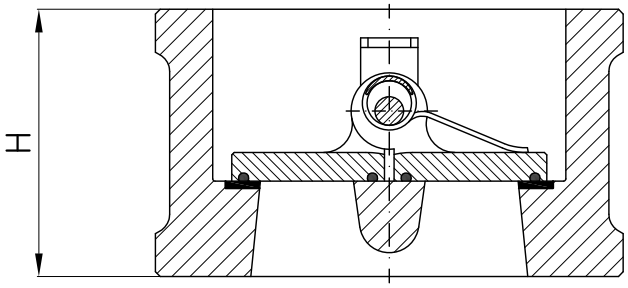

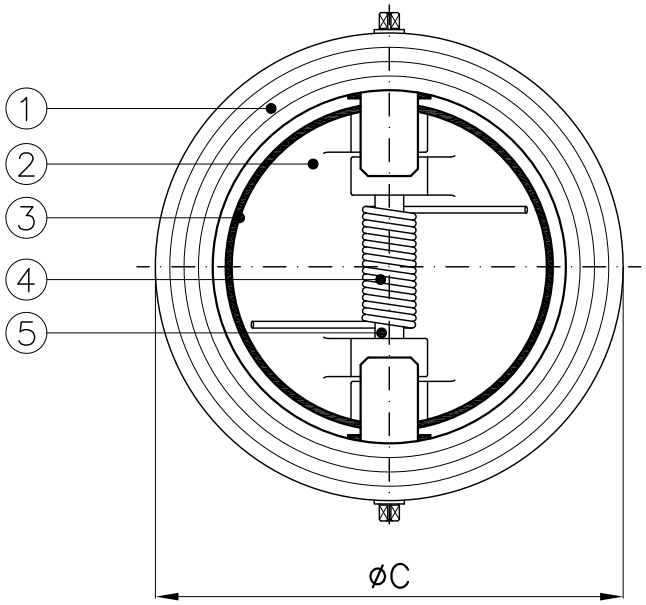

CF8M/CF8M/VITON: Art. UN-TK6

DN	C (PN10-16)	H
50	109	54
65	129	54
80	144	57
100	164	64
125	194	70
150	220	76
200	275	95
250	330	108
300	380	143
350	440-446	127

GS/CF8M/NBR: Art. CV-121B (DB-110)
CF8M/CF8M/VITON: Art. CV-121C (DB-120)

DN	C (PN10-16)	H	Weight CV-121B/DB110 (Kg)	Weight CV-121C/DB120 (Kg)
50	107	43	1.5	1.6
65	127	46	2.4	2.6
80	142	64	3.6	3.9
100	161	64	5.7	6.2
125	191	70	7.3	8
150	218	76	9	9.8
200	273	89	17	19
250	329	114	26	28
300	379	114	42	46
350	438	127	55	60
400	489	140	75	82
450	535	152	107	117
500	594	152	122	133
600	720	178	165	180

Combinazione materiali standard – Standard materials Combination

		GS/CF8M/NBR	CF8M/CF8M/VITON
ITEM	DENOMINAZIONE DENOMINATION	MATERIALE MATERIAL	MATERIALE MATERIAL
01	Body	Nodular cast iron EN-GJS-400-15U UNI EN1563	Stainless steel CF8M ASTM A351
02	Disc	Stainless steel CF8M ASTM A351	Stainless steel CF8M ASTM A351
03	Seat	NBR	VITON
04	Spring	Stainless steel UNI EN10151	Stainless steel UNI EN10151
05	Shaft	Stainless steel AISI316 UNI EN10088	Stainless steel AISI316 UNI EN10088

Nota: Combinazioni materiali non standard a richiesta
Note: Non standard materials combinations on request

Conform to:

API 594
API 598
ANSI B16.34
MSS SP6

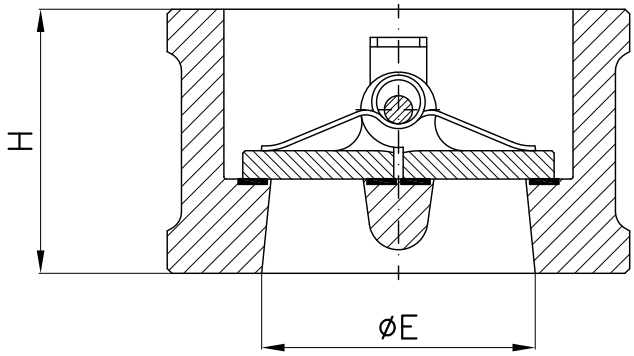

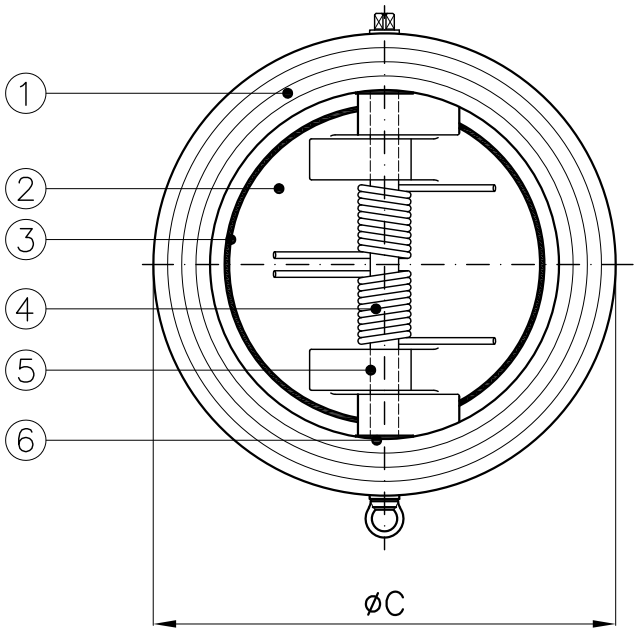

DN		øC	øE	H (ANSI150)	H (PN16)	Weight (Kg)
50	2”	104	45	60	–	2.5
65	2”1/2	123	60	66	–	3
80	3”	136	75	73	–	4
100	4”	174	90	73	–	6.5
125	5”	197	120	85	–	10
150	6”	222	145	98	–	12
200	8”	279	175	127	–	25
250	10”	339	240	146	114	32
300	12”	409	295	181	114	57
350	14”	450	350	184	–	85
400	16”	514	380	191	140	128

Combinazione materiali standard Standard Combination materials		
		BA
ITEM	DENOMINAZIONE DENOMINATION	MATERIALE MATERIAL
01	Body	Al–Bronze ASTM B148 C95800
02	Disc	Al–Bronze ASTM B148 C95800
03	Seat	Al–Bronze ASTM B148 C95800
04	Spring	INCONEL X750
05	Shaft	Monel K–500 (2.4375) BS3076 NA18
06	Bearing	Al–Bronze ASTM B148 C95800

Nota: Combinazioni materiali non standard a richiesta
Note: Non standard materials combinations on request

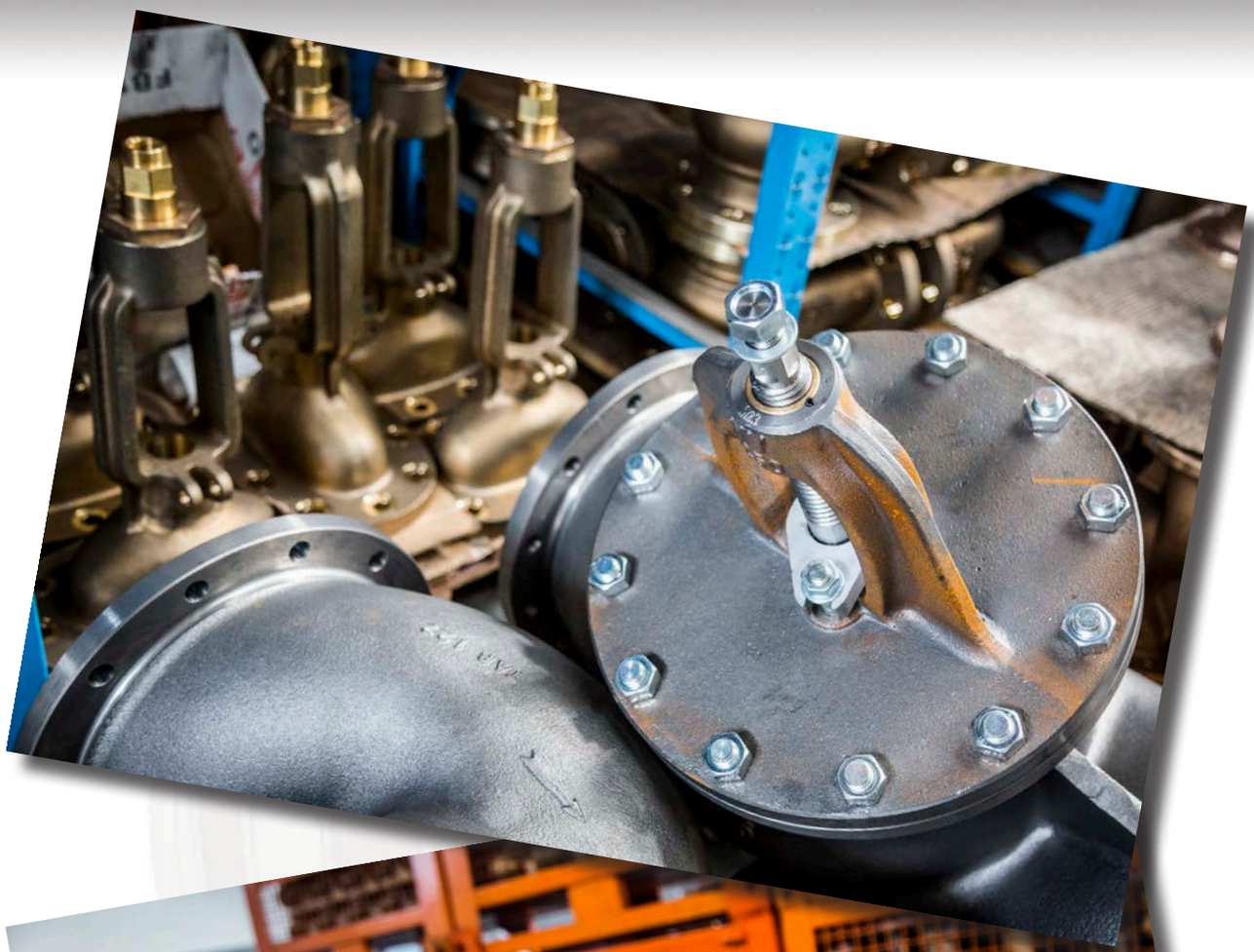

www.medanaevisca.it

Valvole a sfera SPLIT BODY, passaggio totale flangiate PN6-16-40-ANSI150

Ball valves SPLIT BODY, full bore flanged NP6-16-40-ANSI150

Tab.200

Conform to:

DIN 3202
ANSI B16.34
ANSI B16.5
UNI EN 1092

Tab 200A: ANSI150

Tab 200B: PN6–16–40

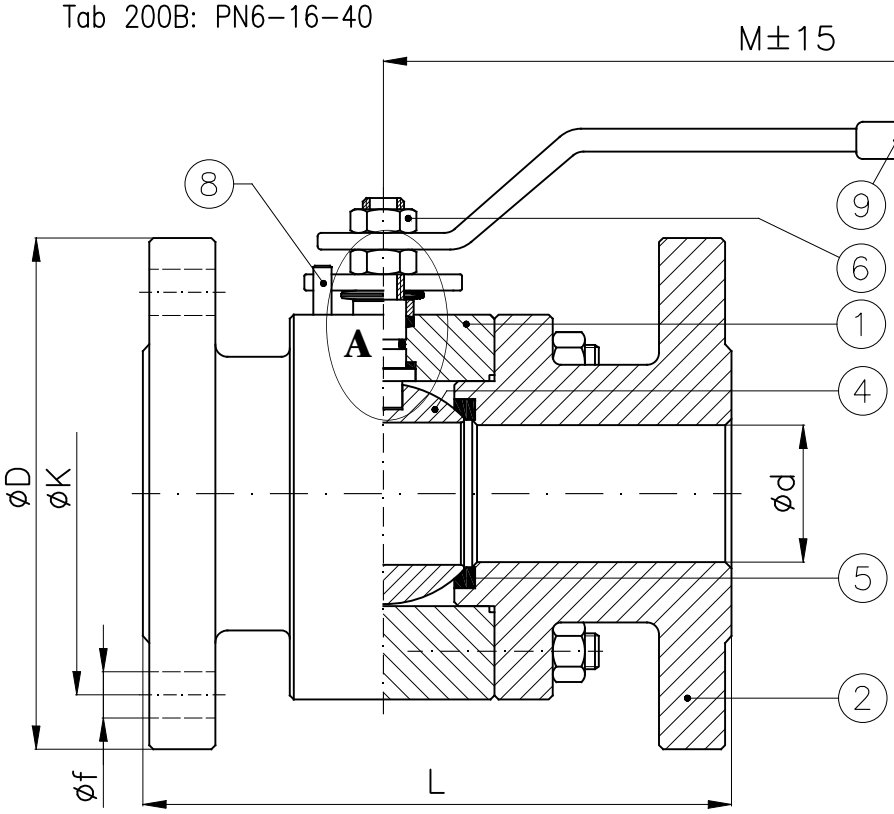

DETAIL - DETTAGLIO "A"

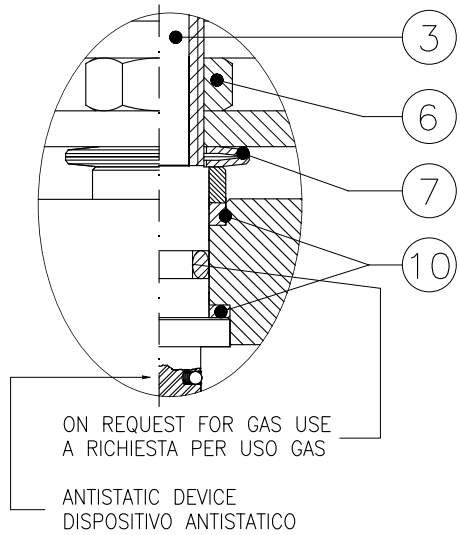

				Tab. 200B		Tab. 200A		PN6 – NP6				PN16 – NP16				PN40–NP40				ANSI150			
DN		d	M	L PN6–16–40	Weight (Kg)	L ANSI150	Weight (Kg)	D	K	f	Holes NO. f	D	K	f	Holes NO. f	D	K	f	Holes NO. f	D	K	f	Holes NO. f
15	1/2"	14	145	115	2.7	108	2.5	80	55	11	4	95	65	14	4	95	65	14	4	88.9	60	16	4
20	3/4"	19	185	120	4	117	4	90	65	11	4	105	75	14	4	105	75	14	4	98.4	70	16	4
25	1"	25	185	125	6	127	6	100	75	11	4	115	85	14	4	115	85	14	4	108	79	16	4
32	1"1/4	32	270	130	7	140	8	120	90	14	4	140	100	18	4	140	100	18	4	118	89	16	4
40	1"1/2	38	270	140	12	165	13	130	100	14	4	150	110	18	4	150	110	18	4	127	98	16	4
50	2"	48	270	150	14	178	17	140	110	14	4	165	125	18	4	165	125	18	4	152	121	19	4
65	2"1/2	65	355	170	21	190	22	160	130	14	4	185	145	18	4	185	145	18	8	178	140	19	4
80	3"	76	355	180	22	203	30	190	150	18	4	200	160	18	8	200	160	18	8	190	152	19	4
100	4"	95	460	190	36	229	40	210	170	18	4	220	180	18	8	235	190	22	8	229	191	19	8
125	5"	119	460	325	60	254	50	240	200	18	8	250	210	18	8	270	220	26	8	254	216	22	8
150	6"	145	460	350	70	267	71	265	225	18	8	285	240	22	8	300	250	26	8	279	241	22	8

Combinazione materiali standard – Standard materials Combination			
		A/316	316/316
ITEM	DENOMINAZIONE DENOMINATION	MATERIALE MATERIAL	MATERIALE MATERIAL
01	Body	Forged steel ASTM A105N	Stainless steel AISI316 UNI EN10088
02	Lateral	Forged steel ASTM A105N	Stainless steel AISI316 UNI EN10088
03	Stem	Stainless steel AISI316 UNI EN10088	Stainless steel AISI316 UNI EN10088
04	Ball	Stainless steel AISI316/304 UNI EN10088	Stainless steel AISI316 UNI EN10088
05	Seat	PTFE/RPTFE	PTFE/RPTFE

Nota: Combinazioni materiali non standard a richiesta
Note: Non standard materials combinations on request

Combinazione materiali standard – Standard materials Combination			
		A/316	316/316
ITEM	DENOMINAZIONE DENOMINATION	MATERIALE MATERIAL	MATERIALE MATERIAL
06	Lever and gland nut	Galvanized Steel 8.8 EN20898–1	Galvanized Steel 8.8 EN20898–1
07	Socket springs	Galvanized Steel	Galvanized Steel
08	Stop pin	Galvanized Steel	Galvanized Steel
09	Hand lever	Galvanized Steel	Galvanized Steel
10	Stem seals	RPTFE	RPTFE

Nota: Combinazioni materiali non standard a richiesta
Note: Non standard materials combinations on request

Valvole a sfera SPLIT BODY, passaggio totale flangiate PN6-16-40-ANSI150 con attuatore idraulico doppio effetto

Ball valves SPLIT BODY, full bore flanged NP6-16-40-ANSI150 with hydraulic double acting actuator

Tab.200 Hydr/DA

Tab 200A–Hydr/DA: ANSI150
Tab 200B–Hydr/DA: PN6–16–40

Conform to:
DIN 3202
ANSI B16.34
ANSI B16.5
UNI EN 1092

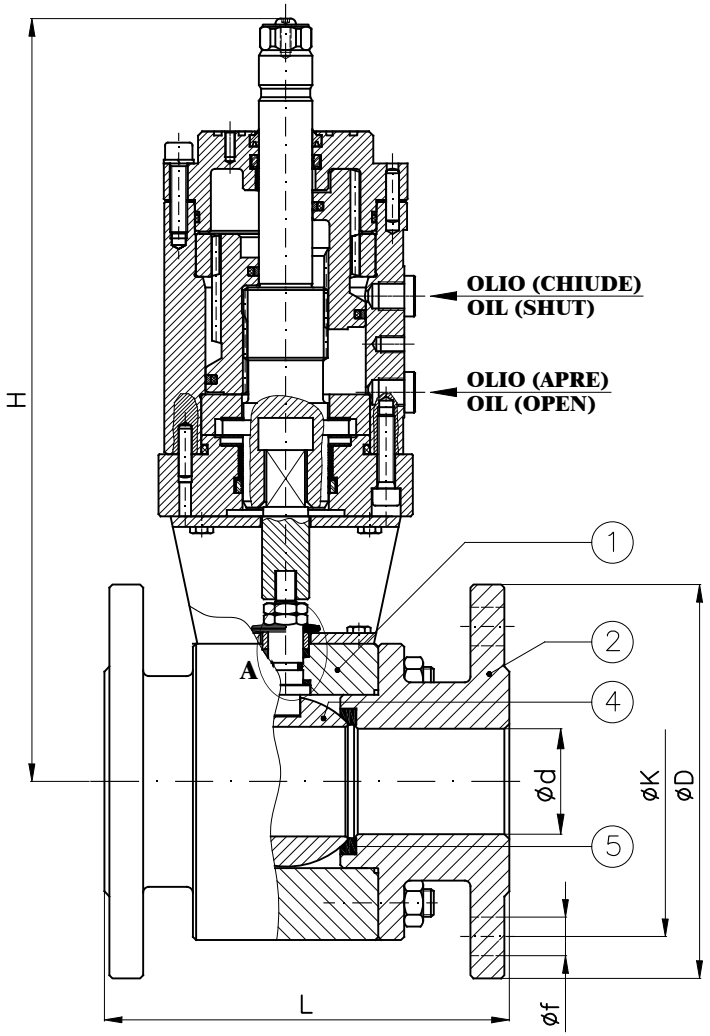

DETAIL - DETTAGLIO "A"

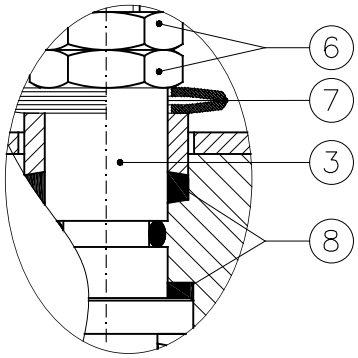

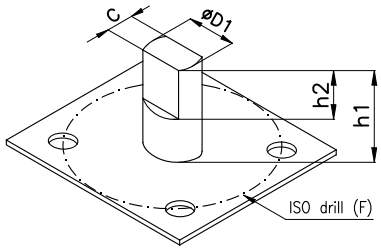

DN		D1xC	h1	h2	ISO–F
15	1/2"	10x5.5	19	8	F03
20	3/4"	12x7.5	27	9	F04
25	1"	12x7.5	25	10	F04
32	1"1/4	14x9	41	16	F04
40	1"1/2	14x9	41	16	F04
50	2"	14x9	37	15	F05
65	2"1/2	22x14	57	24	F07
80	3"	22x14	60	28	F07
100	4"	30x18	70	26	F07
125	5"	30x18	64	24	F10
150	6"	30x18	64	24	F10

Attuatore rotante a doppio effetto

Le taglie degli attuatori devono essere verificate in funzione della pressione di esercizio della valvola e della pressione dell'olio del circuito idraulico.

Double acting rotary actuator

The size of the actuator must be checked on the strength of the working pressure of the valve and on the strength of the oil pressure inside the hydraulic circuit.

					Tab. 200B–Hydr/DA		Tab. 200A–Hydr/DA		PN6 – NP6				PN16 – NP16				PN40–NP40				ANSI150			
DN		ATTUATORE ACTUATOR	d	H (~)	L PN6–16–40	Weight (Kg)	L ANSI150	Weight (Kg)	D	K	f	Holes NO. f	D	K	f	Holes NO. f	D	K	f	Holes NO. f	D	K	f	Holes NO. f
15	1/2"	ARL4 (RL.05)	14	240	115	5.5	108	5.3	80	55	11	4	95	65	14	4	95	65	14	4	88.9	60	16	4
20	3/4"	ARL4 (RL.05)	19	245	120	7	117	7	90	65	11	4	105	75	14	4	105	75	14	4	98.4	70	16	4
25	1"	ARL4 (RL.05)	25	250	125	9	127	9	100	75	11	4	115	85	14	4	115	85	14	4	108	79	16	4
32	1"1/4	ARL10 (RL.14)	32	310	130	13	140	14	120	90	14	4	140	100	18	4	140	100	18	4	118	89	16	4
40	1"1/2	ARL10 (RL.14)	38	315	140	18	165	19	130	100	14	4	150	110	18	4	150	110	18	4	127	98	16	4
50	2"	ARL10 (RL.14)	48	325	150	20	178	23	140	110	14	4	165	125	18	4	165	125	18	4	152	121	19	4
65	2"1/2	ARL20 (RL.16)	65	355	170	30	190	31	160	130	14	4	185	145	18	4	185	145	18	8	178	140	19	4
80	3"	ARL20 (RL.16)	76	360	180	31	203	39	190	150	18	4	200	160	18	8	200	160	18	8	190	152	19	4
100	4"	ARL45 (RL.26)	95	400	190	48	229	52	210	170	18	4	220	180	18	8	235	190	22	8	229	191	19	8
125	5"	ARL75 (RL.32)	119	445	325	79	254	69	240	200	18	8	250	210	18	8	270	220	26	8	254	216	22	8
150	6"	ARL75 (RL.32)	145	470	350	89	267	90	265	225	18	8	285	240	22	8	300	250	26	8	279	241	22	8

Combinazione materiali standard – Standard materials Combination			
		A/316	316/316
ITEM	DENOMINAZIONE DENOMINATION	MATERIALE MATERIAL	MATERIALE MATERIAL
01	Body	Forged steel ASTM A105N	Stainless steel AISI316 UNI EN10088
02	Lateral	Forged steel ASTM A105N	Stainless steel AISI316 UNI EN10088
03	Stem	Stainless steel AISI316 UNI EN10088	Stainless steel AISI316 UNI EN10088
04	Ball	Stainless steel AISI316/304 UNI EN10088	Stainless steel AISI316 UNI EN10088

Nota: Combinazioni materiali non standard a richiesta
Note: Non standard materials combinations on request

Combinazione materiali standard – Standard materials Combination			
		A/316	316/316
ITEM	DENOMINAZIONE DENOMINATION	MATERIALE MATERIAL	MATERIALE MATERIAL
05	Seat	PTFE/RPTFE	PTFE/RPTFE
06	Nuts	Galvanized Steel 8.8 EN20898–1	Galvanized Steel 8.8 EN20898–1
07	Socket springs	Galvanized Steel	Galvanized Steel
08	Stem seals	RPTFE	RPTFE

Nota: Combinazioni materiali non standard a richiesta
Note: Non standard materials combinations on request

Valvole a sfera SPLIT BODY, passaggio totale flangiate PN6-16-40-ANSI150 con attuatore idraulico semplice effetto

Ball valves SPLIT BODY, full bore flanged NP6-16-40-ANSI150 with hydraulic single acting actuator

Tab.200 Hydr/SR

Tab 200A–Hydr/SR: ANSI150
Tab 200B–Hydr/SR: PN6–16–40

Conform to:
DIN 3202
ANSI B16.34
ANSI B16.5
UNI EN 1092

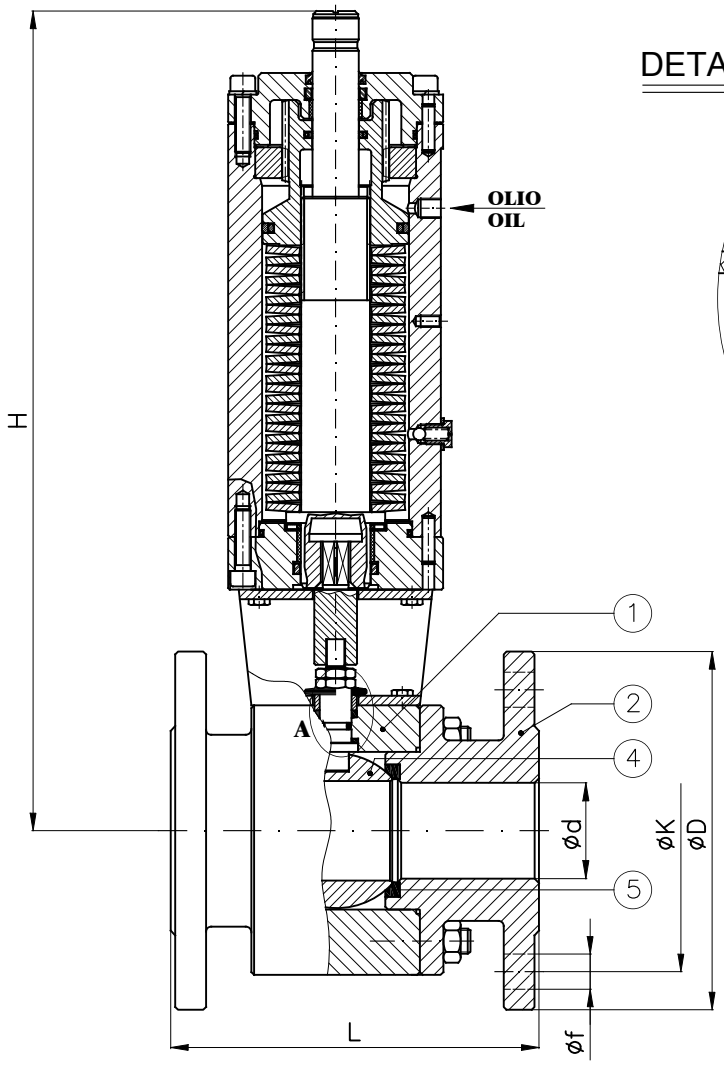

DETAIL - DETTAGLIO "A"

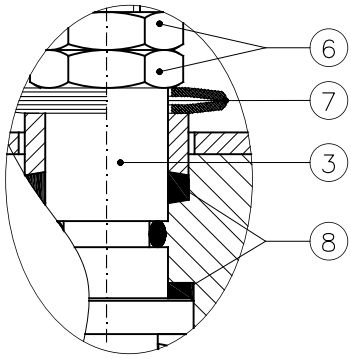

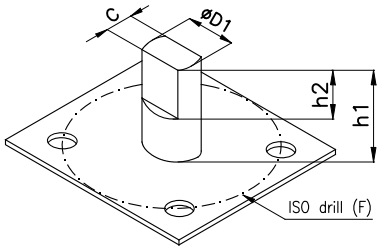

DN		D1xC	h1	h2	ISO–F
15	1/2"	10x5.5	19	8	F03
20	3/4"	12x7.5	27	9	F04
25	1"	12x7.5	25	10	F04
32	1"1/4	14x9	41	16	F04
40	1"1/2	14x9	41	16	F04
50	2"	14x9	37	15	F05
65	2"1/2	22x14	57	24	F07
80	3"	22x14	60	28	F07
100	4"	30x18	70	26	F07
125	5"	30x18	64	24	F10
150	6"	30x18	64	24	F10

Attuatore rotante a singolo effetto con ritorno a molla

Single acting rotary actuator (spring return)

Le taglie degli attuatori devono essere verificate in funzione della pressione di esercizio della valvola e della pressione dell'olio del circuito idraulico.

The size of the actuator must be checked on the strength of the working pressure of the valve and on the strength of the oil pressure inside the hydraulic circuit.

					Tab. 200B–Hydr/SR		Tab. 200A–Hydr/SR		PN6 – NP6				PN16 – NP16				PN40–NP40				ANSI150			
DN		ATTUATORE ACTUATOR	d	H (~)	L PN6–16–40	Weight (Kg)	L ANSI150	Weight (Kg)	D	K	f	Holes NO. f	D	K	f	Holes NO. f	D	K	f	Holes NO. f	D	K	f	Holes NO. f
15	1/2"	H.927 (RS.10)	14	355	115	15.7	108	15.5	80	55	11	4	95	65	14	4	95	65	14	4	88.9	60	16	4
20	3/4"	H.927 (RS.10)	19	360	120	17	117	17	90	65	11	4	105	75	14	4	105	75	14	4	98.4	70	16	4
25	1"	H.927 (RS.10)	25	365	125	19	127	19	100	75	11	4	115	85	14	4	115	85	14	4	108	79	16	4
32	1"1/4	H.927 (RS.10)	32	370	130	20	140	21	120	90	14	4	140	100	18	4	140	100	18	4	118	89	16	4
40	1"1/2	H.927 (RS.10)	38	375	140	25	165	26	130	100	14	4	150	110	18	4	150	110	18	4	127	98	16	4
50	2"	H.927 (RS.10)	48	385	150	27	178	30	140	110	14	4	165	125	18	4	165	125	18	4	152	121	19	4
65	2"1/2	H.927 (RS.10)	65	405	170	34	190	35	160	130	14	4	185	145	18	4	185	145	18	8	178	140	19	4
80	3"	H.929 (RS.13)	76	480	180	38	203	46	190	150	18	4	200	160	18	8	200	160	18	8	190	152	19	4
100	4"	H.931 (RS.17)	95	630	190	66	229	70	210	170	18	4	220	180	18	8	235	190	22	8	229	191	19	8
125	5"	H.940 (RS.21)	119	685	325	94	254	84	240	200	18	8	250	210	18	8	270	220	26	8	254	216	22	8
150	6"	H.941 (RS.26)	145	705	350	104	267	105	265	225	18	8	285	240	22	8	300	250	26	8	279	241	22	8

Combinazione materiali standard – Standard materials Combination			
		A/316	316/316
ITEM	DENOMINAZIONE DENOMINATION	MATERIALE MATERIAL	MATERIALE MATERIAL
01	Body	Forged steel ASTM A105N	Stainless steel AISI316 UNI EN10088
02	Lateral	Forged steel ASTM A105N	Stainless steel AISI316 UNI EN10088
03	Stem	Stainless steel AISI316 UNI EN10088	Stainless steel AISI316 UNI EN10088
04	Ball	Stainless steel AISI316/304 UNI EN10088	Stainless steel AISI316 UNI EN10088

Nota: Combinazioni materiali non standard a richiesta
Note: Non standard materials combinations on request

Combinazione materiali standard – Standard materials Combination			
		A/316	316/316
ITEM	DENOMINAZIONE DENOMINATION	MATERIALE MATERIAL	MATERIALE MATERIAL
05	Seat	PTFE/RPTFE	PTFE/RPTFE
06	Nuts	Galvanized Steel 8.8 EN20898–1	Galvanized Steel 8.8 EN20898–1
07	Socket springs	Galvanized Steel	Galvanized Steel
08	Stem seals	RPTFE	RPTFE

Nota: Combinazioni materiali non standard a richiesta
Note: Non standard materials combinations on request

Tab 200A–ME/AOX: ANSI150
Tab 200B–ME/AOX: PN6–16–40

Conform to:
DIN 3202
ANSI B16.34
ANSI B16.5
UNI EN 1092

DETAIL - DETTAGLIO "A"

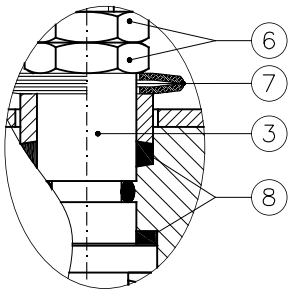

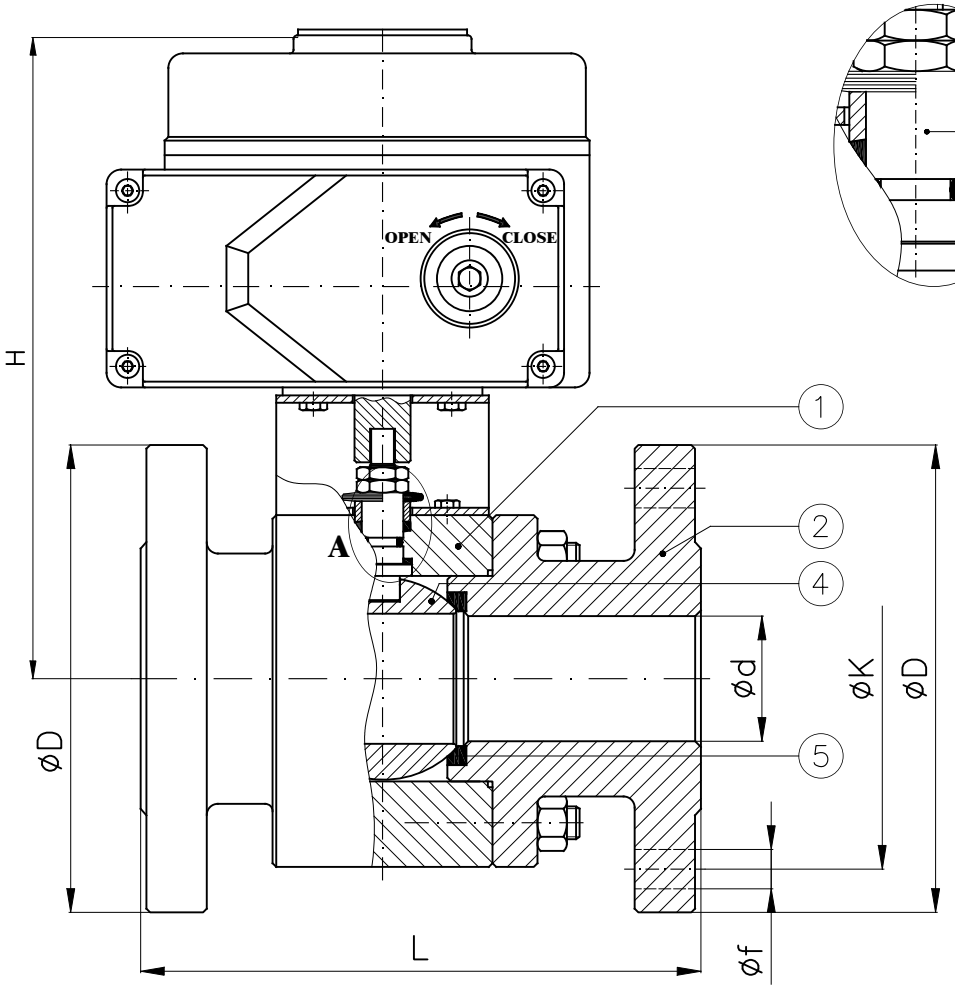

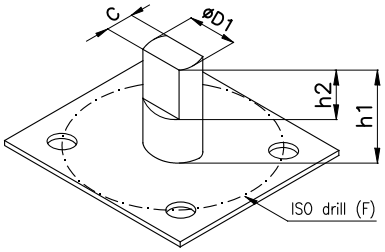

DN		D1xC	h1	h2	ISO–F
15	1/2"	10x5.5	19	8	F03
20	3/4"	12x7.5	27	9	F04
25	1"	12x7.5	25	10	F04
32	1"1/4	14x9	41	16	F04
40	1"1/2	14x9	41	16	F04
50	2"	14x9	37	15	F05
65	2"1/2	22x14	57	24	F07
80	3"	22x14	60	28	F07
100	4"	30x18	70	26	F07
125	5"	30x18	64	24	F10
150	6"	30x18	64	24	F10

					Tab. 200B–ME/AOX		Tab. 200A–ME/AOX		PN6 – NP6				PN16 – NP16				PN40–NP40				ANSI150							
DN		Electric motor	d	H (~)	L PN6–16–40	Weight (Kg)	L ANSI150	Weight (Kg)	D	K	f	Holes NO. f	D	K	f	Holes NO. f	D	K	f	Holes NO. f	D	K	f	Holes NO. f	L2	L3	L4	L5
15	1/2"	AOX–003	14	205	115	4.8	108	4.6	80	55	11	4	95	65	14	4	95	65	14	4	88.9	60	16	4	123	113	100	25
20	3/4"	AOX–003	19	210	120	6.1	117	6.1	90	65	11	4	105	75	14	4	105	75	14	4	98.4	70	16	4	123	113	100	25
25	1"	AOX–005	25	220	125	9.6	127	9.6	100	75	11	4	115	85	14	4	115	85	14	4	108	79	16	4	160	121	121	25
32	1"1/4	AOX–005	32	230	130	10.6	140	11.6	120	90	14	4	140	100	18	4	140	100	18	4	118	89	16	4	160	121	121	25
40	1"1/2	AOX–008	38	235	140	15.6	165	16.6	130	100	14	4	150	110	18	4	150	110	18	4	127	98	16	4	160	121	121	25
50	2"	AOX–008	48	245	150	17.6	178	20.6	140	110	14	4	165	125	18	4	165	125	18	4	152	121	19	4	160	121	121	25
65	2"1/2	AOX–015	65	270	170	25.6	190	26.6	160	130	14	4	185	145	18	4	185	145	18	8	178	140	19	4	189	129	145	25
80	3"	AOX–015	76	275	180	26.6	203	34.6	190	150	18	4	200	160	18	8	200	160	18	8	190	152	19	4	189	129	145	25
100	4"	AOX–030	95	340	190	49.4	229	53.4	210	170	18	4	220	180	18	8	235	190	22	8	229	191	19	8	268	164	200	25

ELECTRIC MOTOR

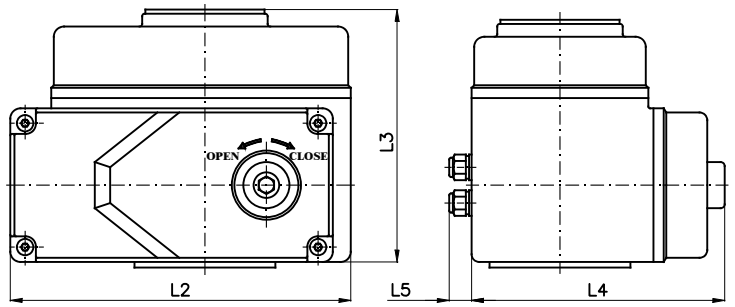

La scelta del motore dipende dalla pressione di esercizio dell'impianto
The choice of the motor depends from plant working pressure

Combinazione materiali standard – Standard materials Combination			
		A/316	316/316
ITEM	DENOMINAZIONE DENOMINATION	MATERIALE MATERIAL	MATERIALE MATERIAL
01	Body	Forged steel ASTM A105N	Stainless steel AISI316 UNI EN10088
02	Lateral	Forged steel ASTM A105N	Stainless steel AISI316 UNI EN10088
03	Stem	Stainless steel AISI316 UNI EN10088	Stainless steel AISI316 UNI EN10088
04	Ball	Stainless steel AISI316/304 UNI EN10088	Stainless steel AISI316 UNI EN10088
05	Seat	PTFE/RPTFE	PTFE/RPTFE
06	Nuts	Galvanized Steel 8.8 EN20898–1	Galvanized Steel 8.8 EN20898–1
07	Socket springs	Galvanized Steel	Galvanized Steel
08	Stem seals	RPTFE	RPTFE

Nota: Combinazioni materiali non standard a richiesta
Note: Non standard materials combinations on request

Tab 200A–ME/PS: ANSI150
Tab 200B–ME/PS: PN6–16–40

Conform to:

DIN 3202
ANSI B16.34
ANSI B16.5
UNI EN 1092

DETAIL - DETTAGLIO "A"

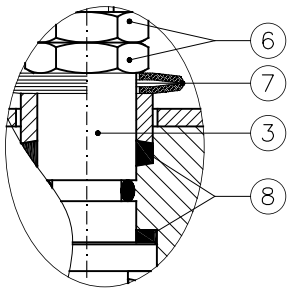

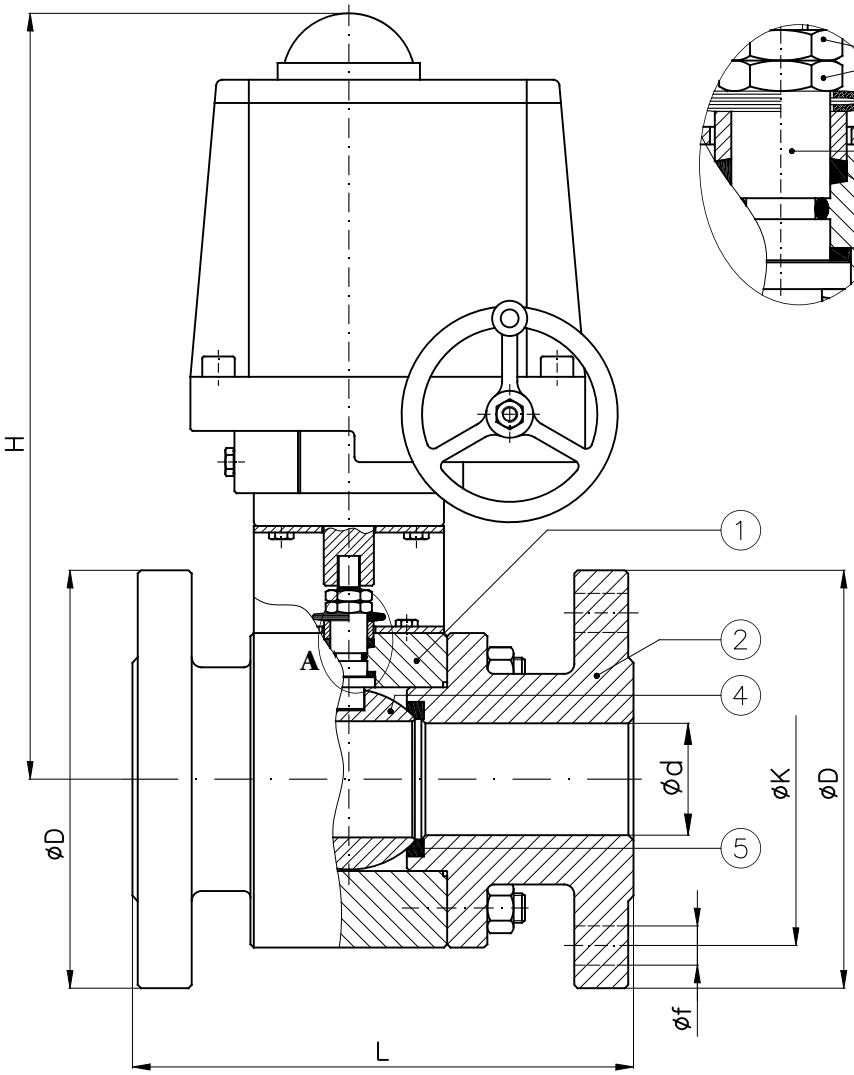

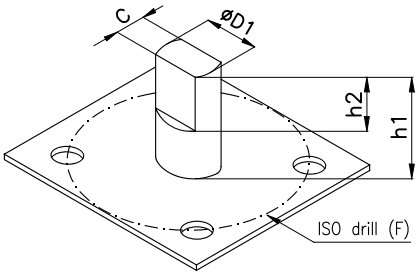

DN		D1xC	h1	h2	ISO–F
15	1/2"	10x5.5	19	8	F03
20	3/4"	12x7.5	27	9	F04
25	1"	12x7.5	25	10	F04
32	1"1/4	14x9	41	16	F04
40	1"1/2	14x9	41	16	F04
50	2"	14x9	37	15	F05
65	2"1/2	22x14	57	24	F07
80	3"	22x14	60	28	F07
100	4"	30x18	70	26	F07

					Tab. 200B–ME/PS		Tab. 200A–ME/PS		PN6 – NP6				PN16 – NP16				PN40–NP40				ANSI150							
DN		Electric motor	d	H (~)	L PN6–16–40	Weight (Kg)	L ANSI150	Weight (Kg)	D	K	f	Holes NO. f	D	K	f	Holes NO. f	D	K	f	Holes NO. f	D	K	f	Holes NO. f	L2	L3	L4	L5
15	1/2"	PSQ–E100	14	360	115	9	108	9	80	55	11	4	95	65	14	4	95	65	14	4	88.9	60	16	4	174	251	206	158
20	3/4"	PSQ–E100	19	365	120	10.5	117	10.5	90	65	11	4	105	75	14	4	105	75	14	4	98.4	70	16	4	174	251	206	158
25	1"	PSQ–E100	25	370	125	12.5	127	12.5	100	75	11	4	115	85	14	4	115	85	14	4	108	79	16	4	174	251	206	158
32	1"1/4	PSQ–E100	32	375	130	13	140	14.5	120	90	14	4	140	100	18	4	140	100	18	4	118	89	16	4	174	251	206	158
40	1"1/2	PSQ–E100	38	380	140	18.5	165	19.5	130	100	14	4	150	110	18	4	150	110	18	4	127	98	16	4	174	251	206	158
50	2"	PSQ–E100	48	390	150	21	178	24	140	110	14	4	165	125	18	4	165	125	18	4	152	121	19	4	174	251	206	158
65	2"1/2	PSQ103	65	405	170	29	190	31	160	130	14	4	185	145	18	4	185	145	18	8	178	140	19	4	196	263	216	158
80	3"	PSQ203	76	500	180	35	203	42	190	150	18	4	200	160	18	8	200	160	18	8	190	152	19	4	227	305	277	186
100	4"	PSQ503	95	595	190	64	229	68	210	170	18	4	220	180	18	8	235	190	22	8	229	191	19	8	278	416	328	235

Classe di protezione : IP67 o IP68
Safety class : IP67 or IP68

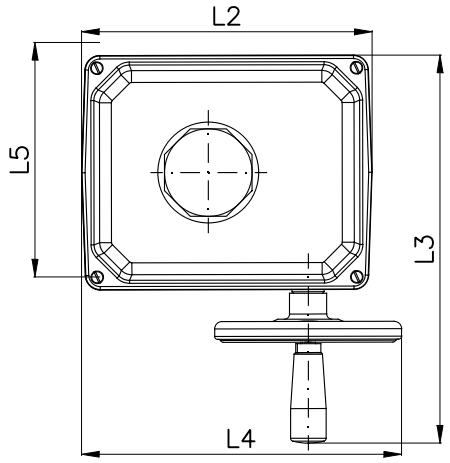

Combinazione materiali standard – Standard materials Combination			
		A/316	316/316
ITEM	DENOMINAZIONE DENOMINATION	MATERIALE MATERIAL	MATERIALE MATERIAL
01	Body	Forged steel ASTM A105N	Stainless steel AISI316 UNI EN10088
02	Lateral	Forged steel ASTM A105N	Stainless steel AISI316 UNI EN10088
03	Stem	Stainless steel AISI316 UNI EN10088	Stainless steel AISI316 UNI EN10088
04	Ball	Stainless steel AISI316/304 UNI EN10088	Stainless steel AISI316 UNI EN10088
05	Seat	PTFE/RPTFE	PTFE/RPTFE
06	Nuts	Galvanized Steel 8.8 EN20898–1	Galvanized Steel 8.8 EN20898–1
07	Socket springs	Galvanized Steel	Galvanized Steel
08	Stem seals	RPTFE	RPTFE

Nota: Combinazioni materiali non standard a richiesta
Note: Non standard materials combinations on request

Valvole a sfera SPLIT BODY, passaggio totale flangiate PN6-16-40-ANSI150 con motore elettrico

Ball valves SPLIT BODY, full bore flanged NP6-16-40-ANSI150 with electric motor

Tab.200 ME/VAL

Tab 200A–ME/VAL: ANSI150
Tab 200B–ME/VAL: PN6–16–40

Conform to:
DIN 3202
ANSI B16.34
ANSI B16.5
UNI EN 1092

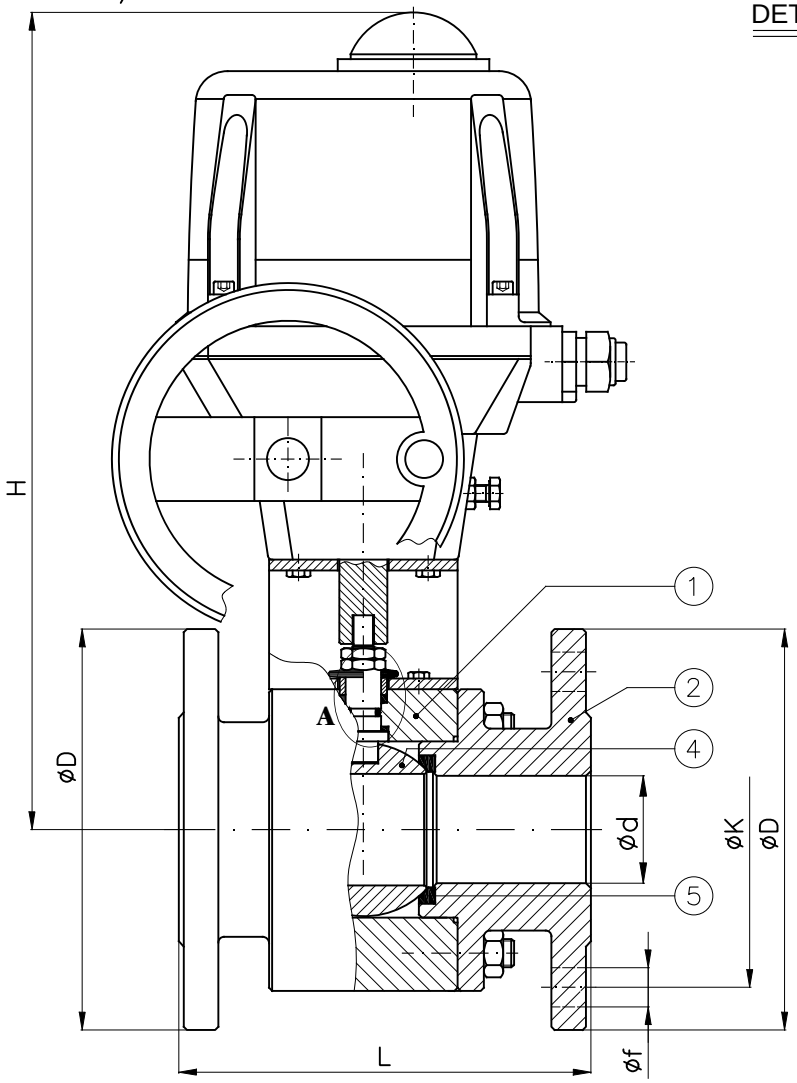

DETAIL - DETTAGLIO "A"

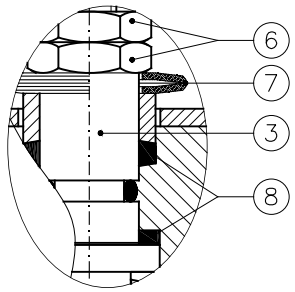

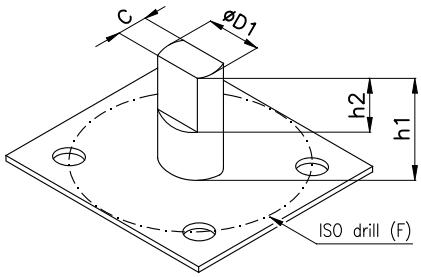

DN		D1xC	h1	h2	ISO–F
15	1/2"	10x5.5	19	8	F03
20	3/4"	12x7.5	27	9	F04
25	1"	12x7.5	25	10	F04
32	1"1/4	14x9	41	16	F04
40	1"1/2	14x9	41	16	F04
50	2"	14x9	37	15	F05
65	2"1/2	22x14	57	24	F07
80	3"	22x14	60	28	F07
100	4"	30x18	70	26	F07

					Tab. 200B–ME/VAL		Tab. 200A–ME/VAL		PN6 – NP6				PN16 – NP16				PN40–NP40				ANSI150			
DN		Electric motor	d	H (~)	L PN6–16–40	Weight (Kg)	L ANSI150	Weight (Kg)	D	K	f	Holes NO. f	D	K	f	Holes NO. f	D	K	f	Holes NO. f	D	K	f	Holes NO. f
15	1/2"	VR25	14	295	115	6.5	108	6	80	55	11	4	95	65	14	4	95	65	14	4	88.9	60	16	4
20	3/4"	VR25	19	295	120	7.5	117	7.5	90	65	11	4	105	75	14	4	105	75	14	4	98.4	70	16	4
25	1"	VR45	25	305	125	9.5	127	9.5	100	75	11	4	115	85	14	4	115	85	14	4	108	79	16	4
32	1"1/4	VR75	32	310	130	10.5	140	11.5	120	90	14	4	140	100	18	4	140	100	18	4	118	89	16	4
40	1"1/2	VR75	38	315	140	15.5	165	16.5	130	100	14	4	150	110	18	4	150	110	18	4	127	98	16	4
50	2"	VR75	48	325	150	17.5	178	20.5	140	110	14	4	165	125	18	4	165	125	18	4	152	121	19	4
65	2"1/2	VS150	65	340	170	26.5	190	27.5	160	130	14	4	185	145	18	4	185	145	18	8	178	140	19	4
80	3"	VS150	76	405	180	27.5	203	35.5	190	150	18	4	200	160	18	8	200	160	18	8	190	152	19	4
100	4"	VS300	95	435	190	41.5	229	45.5	210	170	18	4	220	180	18	8	235	190	22	8	229	191	19	8

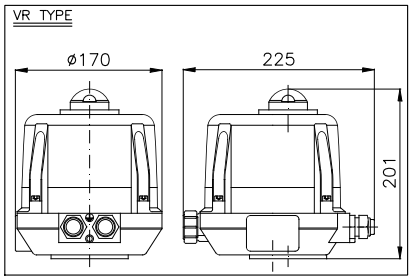

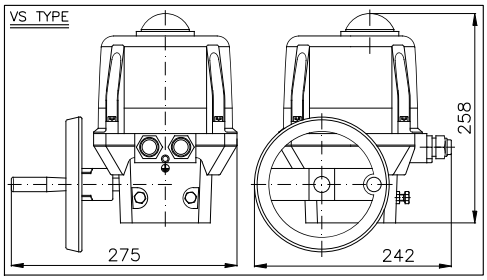

Combinazione materiali standard – Standard materials Combination			
		A/316	316/316
ITEM	DENOMINAZIONE DENOMINATION	MATERIALE MATERIAL	MATERIALE MATERIAL
01	Body	Forged steel ASTM A105N	Stainless steel AISI316 UNI EN10088
02	Lateral	Forged steel ASTM A105N	Stainless steel AISI316 UNI EN10088
03	Stem	Stainless steel AISI316 UNI EN10088	Stainless steel AISI316 UNI EN10088
04	Ball	Stainless steel AISI316/304 UNI EN10088	Stainless steel AISI316 UNI EN10088
05	Seat	PTFE/RPTFE	PTFE/RPTFE
06	Nuts	Galvanized Steel 8.8 EN20898–1	Galvanized Steel 8.8 EN20898–1
07	Socket springs	Galvanized Steel	Galvanized Steel
08	Stem seals	RPTFE	RPTFE

Nota: Combinazioni materiali non standard a richiesta
Note: Non standard materials combinations on request

Valvole a sfera SPLIT BODY PN6-16-40-ANSI150 con attuatore pneumatico

Ball valves SPLIT BODY NP6-16-40-ANSI150 with pneumatic actuator

Tab.200PN

Tab 200PN–A: ANSI150
Tab 200BPN–B: PN6–16–40

Conform to:

DIN 3202
ANSI B16.34
ANSI B16.5
UNI EN 1092

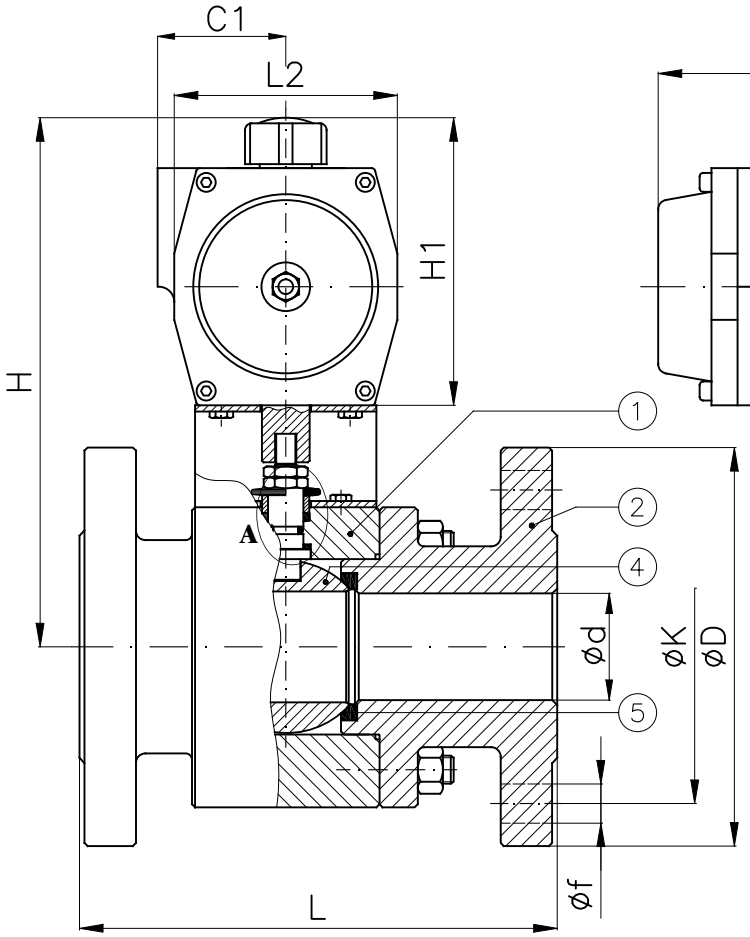

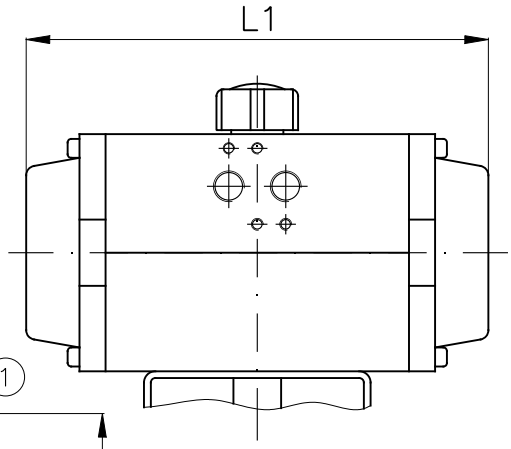

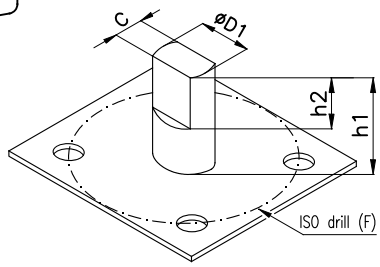

DETAIL - DETTAGLIO "A"

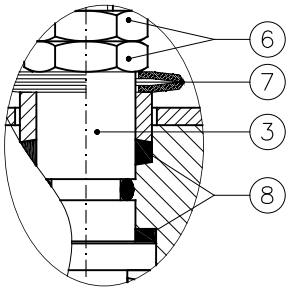

DN		D1xC	h1	h2	ISO–F
15	1/2"	10x5.5	19	8	F03
20	3/4"	12x7.5	27	9	F04
25	1"	12x7.5	25	10	F04
32	1"1/4	14x9	41	16	F04
40	1"1/2	14x9	41	16	F04
50	2"	14x9	37	15	F05
65	2"1/2	22x14	57	24	F07
80	3"	22x14	60	28	F07
100	4"	30x18	70	26	F07
125	5"	30x18	64	24	F10
150	6"	30x18	64	24	F10

DA: DOUBLE ACTING
SR: SIMPLE ACTING (spring return)

DN		Pneumatic Actuator	C1	d	H (~)	H1	L PN6–16–40 (Tab. 200PN–B)	L ANSI150 (Tab. 200PN–A)	L1	L2	PN6 – NP6 D	K	f	Holes NO. f	PN16 – NP16 D	K	f	Holes NO. f	PN40 – NP40 D	K	f	Holes NO. f	ANSI150 D	K	f	Holes NO. f	Weight (Kg)
15	1/2"	AP1 DA AP1 SR	41	14	185	92	115	108	142	60	80	55	11	4	95	65	14	4	95	65	14	4	88.9	60	16	4	3.5
20	3/4"	AP2 DA AP2 SR	44.5	19	205	108	120	117	155	73	90	65	11	4	105	75	14	4	105	75	14	4	98.4	70	16	4	5.5
25	1"	AP2 DA AP3 SR	44.5 49.5	25	210 225	108 125	125	127	155 213	73 85	100	75	11	4	115	85	14	4	115	85	14	4	108	79	16	4	7.5 8.5
32	1"1/4	AP3 DA AP3 SR	49.5	32	230	125	130	140	213	85	120	90	14	4	140	100	18	4	140	100	18	4	118	89	16	4	10.5
40	1"1/2	AP3 DA AP3.5 SR	49.5 53	38	235 245	125 135	140	165	213 236	85 98	130	100	14	4	150	110	18	4	150	110	18	4	127	98	16	4	15.5 17.0
50	2"	AP3 DA AP3.5 SR	49.5 53	48	245 255	125 135	150	178	213 236	85 98	140	110	14	4	165	125	18	4	165	125	18	4	152	121	19	4	19.5 21.0
65	2"1/2	AP3.5 DA AP4 SR	53 58	65	275 290	135 150	170	190	236 276	98 110	160	130	14	4	185	145	18	4	185	145	18	8	178	140	19	4	26.0 27.5
80	3"	AP4 DA AP4.5 SR	58 69	76	295 320	150 177	180	203	276 310	110 128	190	150	18	4	200	160	18	8	200	160	18	8	190	152	19	4	35.5 38.5
100	4"	AP4.5 DA AP5 SR	69 –	95	350 365	177 190	190	229	310 366	128 140	210	170	18	4	220	180	18	8	235	190	22	8	229	191	19	8	48.5 50.5
125	5"	AP4.5 DA AP5.5 SR	69 –	119	370 405	177 211	325	254	310 388	128 160	240	200	18	8	250	210	18	8	270	220	26	8	254	216	22	8	68.5 74.0
150	6"	AP5 DA AP6 SR	–	145	405 450	190 235	350	267	366 468	140 175	265	225	18	8	285	240	22	8	300	250	26	8	279	241	22	8	81.5 91.0

Combinazione materiali standard – Standard materials Combination

ITEM	DENOMINAZIONE DENOMINATION	A/316 MATERIALE MATERIAL	316/316 MATERIALE MATERIAL
01	Body	Forged steel ASTM A105N	Stainless steel AISI316 UNI EN10088
02	Lateral	Forged steel ASTM A105N	Stainless steel AISI316 UNI EN10088
03	Stem	Stainless steel AISI316 UNI EN10088	Stainless steel AISI316 UNI EN10088
04	Ball	Stainless steel AISI316/304 UNI EN10088	Stainless steel AISI316 UNI EN10088

Nota: Combinazioni materiali non standard a richiesta
Note: Non standard materials combinations on request

Combinazione materiali standard – Standard materials Combination

ITEM	DENOMINAZIONE DENOMINATION	A/316 MATERIALE MATERIAL	316/316 MATERIALE MATERIAL
05	Seat	PTFE/RPTFE	PTFE/RPTFE
06	Nuts	Galvanized Steel 8.8 EN20898–1	Galvanized Steel 8.8 EN20898–1
07	Socket springs	Galvanized Steel	Galvanized Steel
08	Stem seals	RPTFE	RPTFE

Nota: Combinazioni materiali non standard a richiesta
Note: Non standard materials combinations on request

Valvole a sfera in ottone flangiata PN10DIN - PN16
Full bore brass ball valves flanged NP10DIN - NP16

Art.295

Conform to:
UNI EN1092

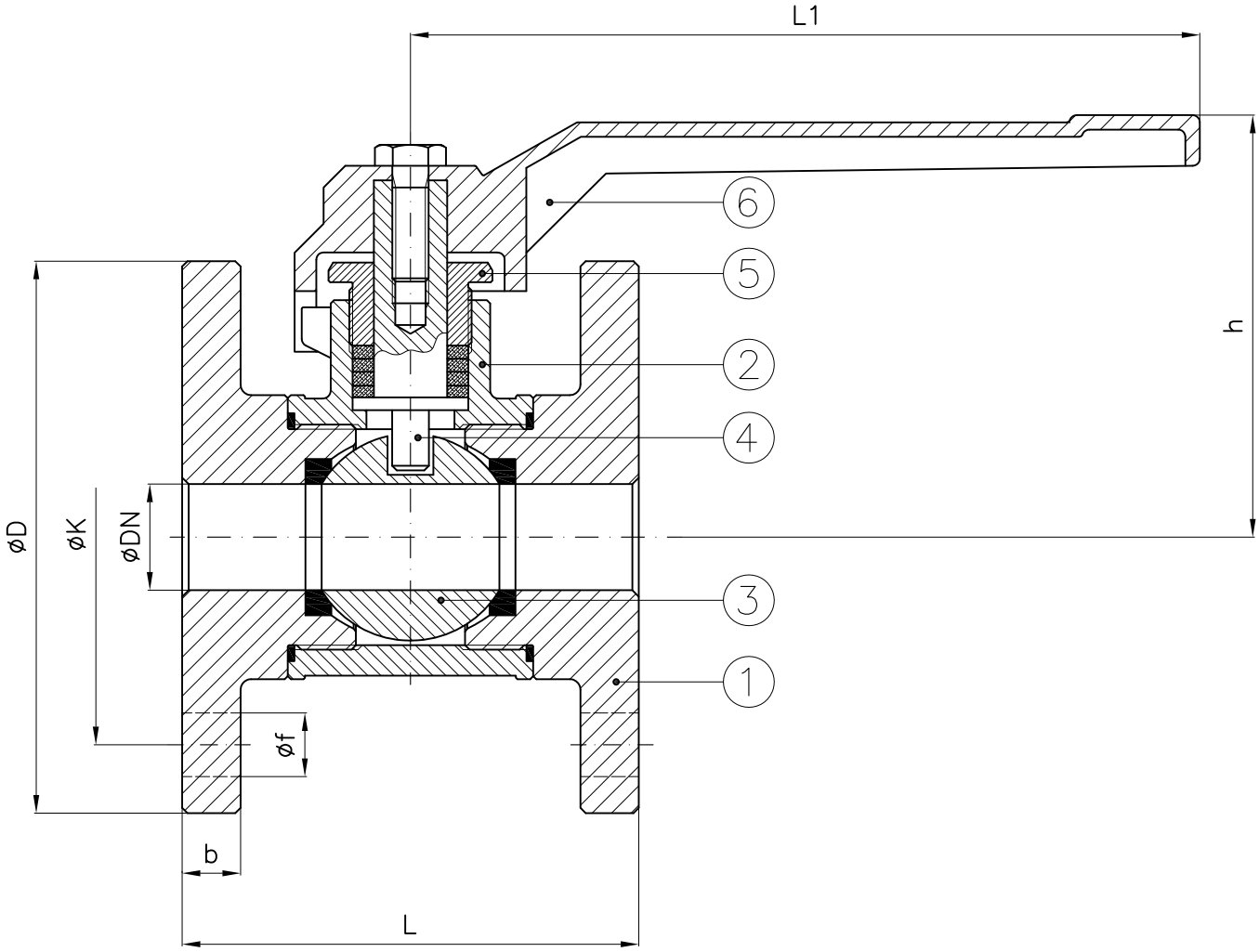

DN	b	h	L	L1	Weight (Kg)	D	K	f	Holes NO. f
15	9	70	65	140	1.4	95	65	14	4
20	9	70	80	140	1.8	105	75	14	4
25	10	90	85	165	2.5	115	85	14	4
32	11	100	100	165	3.7	140	100	18	4
40	11	110	110	200	4.8	150	110	18	4
50	12	120	125	200	6.5	165	125	18	4
65	12	130	140	240	8.9	185	145	18	4
80	14	145	150	240	11.9	200	160	18	8
100	15	170	170	320	15.6	220	180	18	8

Combinazione materiali standard – Standard materials Combination		
		O/O
ITEM	DENOMINAZIONE DENOMINATION	MATERIALE MATERIAL
01	Body	Brass UNI EN1982
02	Stem-stopping ring	Brass CW614N (OT58)
03	Ball	Brass UNI EN1982
04	Stem	Brass CW614N (OT58)
05	Gland	Brass CW614N (OT58)
06	Lever	Aluminium
Nota: Note:	Combinazioni materiali non standard a richiesta Non standard materials combinations on request	

Valvole a sfera flangiate PN16
Ball valves flanged NP16

Art.S2

Conform to:
UNI EN1092

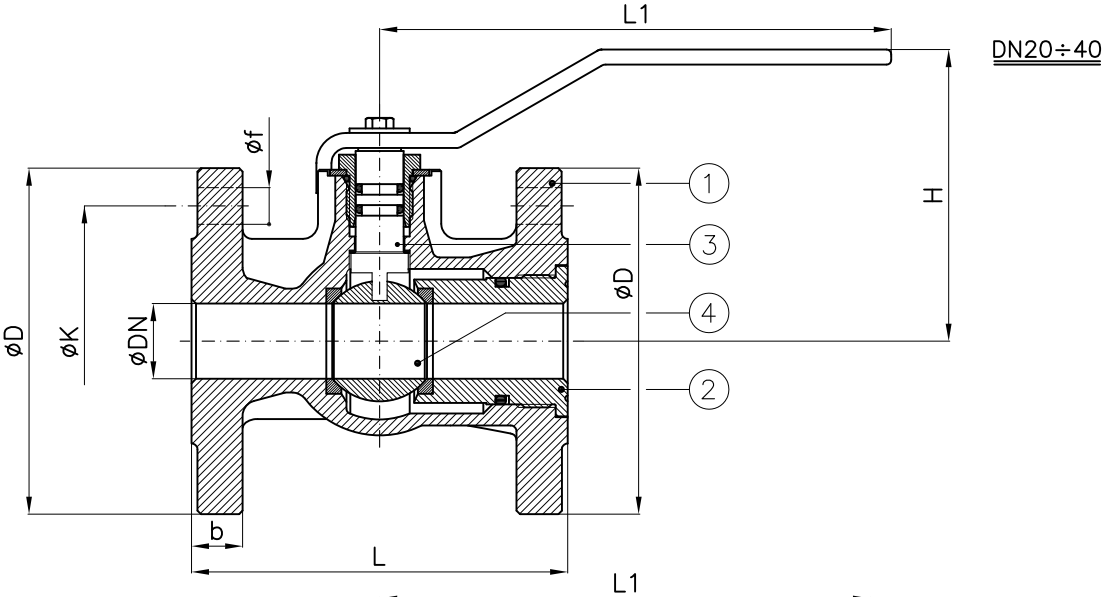

S2.300	**B/O**
S2.322	**B/316**
S2.777	**BA/BA**
S2.722	**BA/316**
S2.377	**B/BA**
S2.000	**G/O**
S2.021	**G/316**
S2.100	**GS/O**
S2.121	**GS/316**

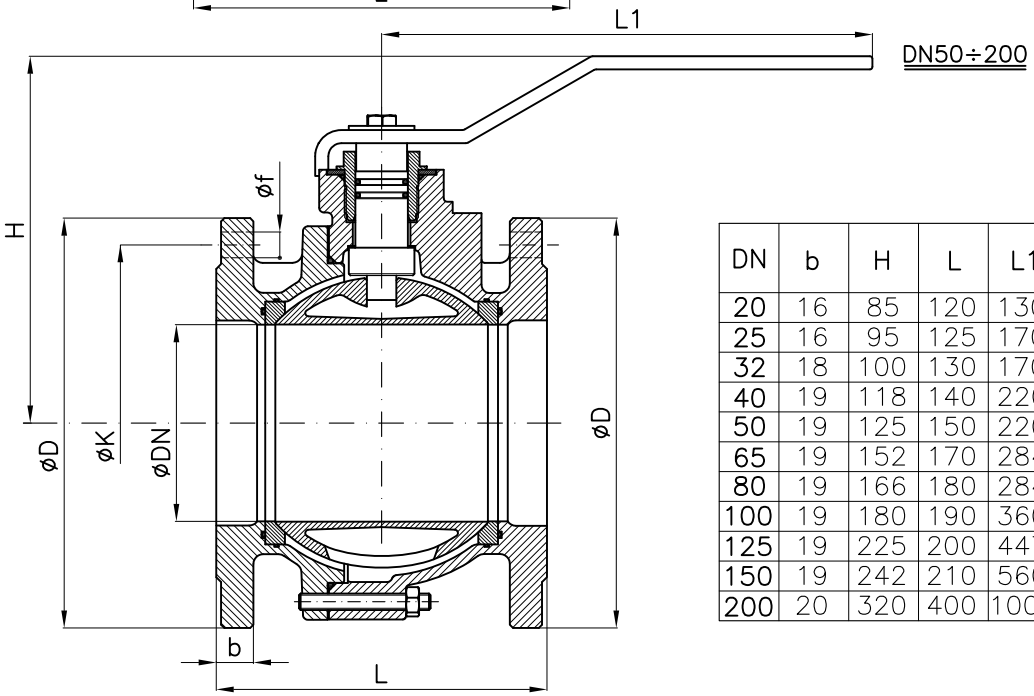

DN	b	H	L	L1	D	K	f	Holes NO. f	Weight (Kg)
20	16	85	120	130	105	75	14	4	2.7
25	16	95	125	170	115	85	14	4	3.6
32	18	100	130	170	140	100	18	4	4.8
40	19	118	140	220	150	110	18	4	6.2
50	19	125	150	220	165	125	18	4	9
65	19	152	170	284	185	145	18	4	12.2
80	19	166	180	284	200	160	18	8	15.5
100	19	180	190	360	220	180	18	8	20
125	19	225	200	447	250	210	18	8	28
150	19	242	210	560	285	240	22	8	38.5
200	20	320	400	1000	340	295	22	12	93

ESECUZIONE FLANGE ØD PIANA(FF) GRADINO(RF)
FLANGES EXECUTION ØD FLAT(FF) STEP(RF)

ESECUZIONE PN6, ANSI150 SU RICHIESTA
EXECUTION NP6, ANSI150 ON REQUEST

		S2.300(FF)-(RF)	S2.322(FF)-(RF)	S2.777(FF)-(RF)	S2.722(FF)-(RF)	S2.377(FF)-(RF)
		B/O	B/316	BA/BA	BA/316	B/BA
ITEM	DENOMINAZIONE DENOMINATION	MATERIALE MATERIAL	MATERIALE MATERIAL	MATERIALE MATERIAL	MATERIALE MATERIAL	MATERIALE MATERIAL
01	Body	Bronze UNI EN1982 G-CuSn5Zn5Pb5	Bronze UNI EN1982 G-CuSn5Zn5Pb5	Alu Bronze UNI EN1982 G-CuAl10Ni5Fe5	Alu Bronze UNI EN1982 G-CuAl10Ni5Fe5	Bronze UNI EN1982 G-CuSn5Zn5Pb5
02	Lateral	Bronze UNI EN1982 G-CuSn5Zn5Pb5	Bronze UNI EN1982 G-CuSn5Zn5Pb5	Alu Bronze UNI EN1982 G-CuAl10Ni5Fe5	Alu Bronze UNI EN1982 G-CuAl10Ni5Fe5	Bronze UNI EN1982 G-CuSn5Zn5Pb5
03	Stem	Brass CW617N (OT58)	Stainless steel AISI316 UNI EN10088	Alu Bronze UNI EN1982 G-CuAl10Ni5Fe4	Stainless steel AISI316 UNI EN10088	Alu Bronze UNI EN1982 G-CuAl10Ni5Fe4
04	Ball	Brass CW617N (OT58)	Stainless steel AISI316 UNI EN10088	Alu Bronze UNI EN1982 G-CuAl10Ni5Fe5	Stainless steel AISI316 UNI EN10088	Alu Bronze UNI EN1982 G-CuAl10Ni5Fe5

		S2.000 (RF)	S2.021 (RF)	S2.100 (RF)	S2.121 (RF)
		G/O	G/316	GS/O	GS/316
ITEM	DENOMINAZIONE DENOMINATION	MATERIALE MATERIAL	MATERIALE MATERIAL	MATERIALE MATERIAL	MATERIALE MATERIAL
01	Body	Cast iron UNI EN1561 EN-GJL-250	Cast iron UNI EN1561 EN-GJL-250	Nodular cast iron EN-GJS-400-15U UNI EN1563	Nodular cast iron EN-GJS-400-15U UNI EN1563
02	Lateral	Cast iron UNI EN1561 EN-GJL-250	Cast iron UNI EN1561 EN-GJL-250	Nodular cast iron EN-GJS-400-15U UNI EN1563	Nodular cast iron EN-GJS-400-15U UNI EN1563
03	Stem	Brass CW617N (OT58)	Stainless steel AISI304 UNI EN10088	Brass CW617N (OT58)	Stainless steel AISI304 UNI EN10088
04	Ball	Brass CW617N (OT58)	Stainless steel AISI316 UNI EN10088	Brass CW617N (OT58)	Stainless steel AISI316 UNI EN10088

Nota: Combinazioni materiali non standard a richiesta
Note: Non standard materials combinations on request

Valvole a sfera flangiate PN16 con motore elettrico
Ball valves flanged NP16 with electric motor

Art.S2ME/AOX

Conform to:
UNI EN1092

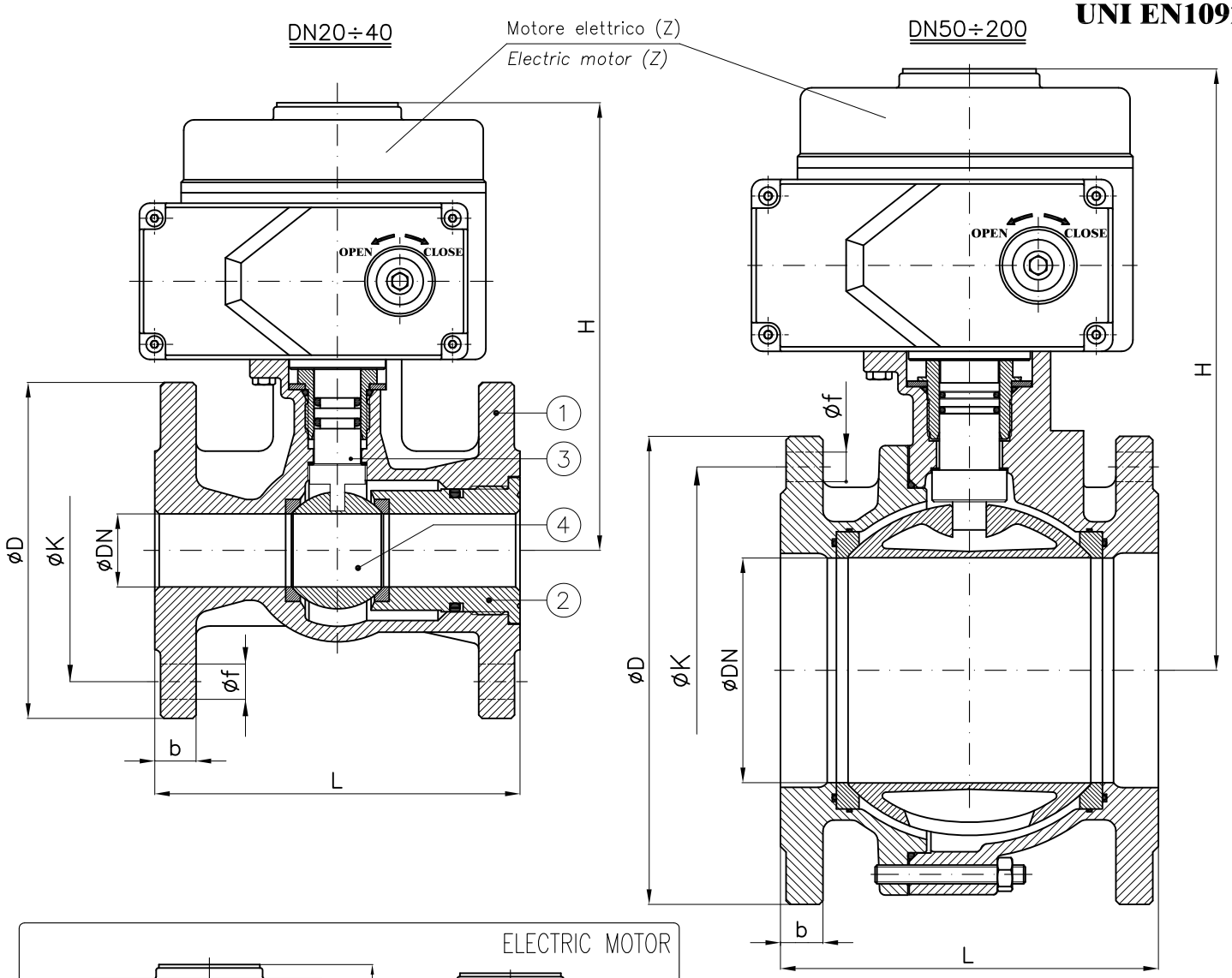

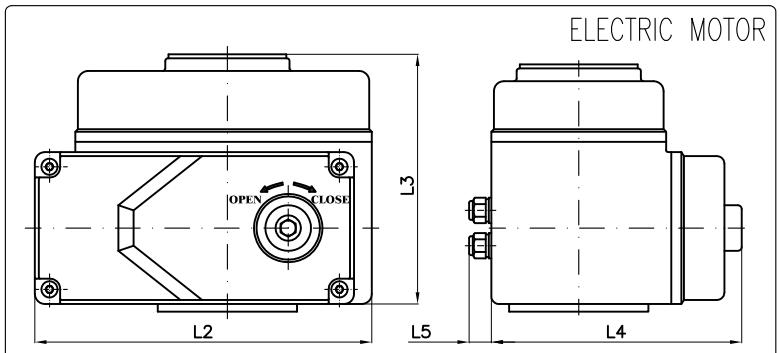

La scelta del motore dipende dalla pressione di esercizio dell'impianto
The choice of the motor depends from plant working pressure

S2.300	**B/O**
S2.322	**B/316**
S2.777	**BA/BA**
S2.722	**BA/316**
S2.377	**B/BA**
S2.000	**G/O**
S2.021	**G/316**
S2.100	**GS/O**
S2.121	**GS/316**

DN	b	H (~)	L	D	K	f	Holes NO. f	Z	L2	L3	L4	L5	Weight (Kg)
20	16	165	120	105	75	14	4	AOX-003	123	113	100	25	5
25	16	175	125	115	85	14	4	AOX-003	123	113	100	25	6
32	18	180	130	140	100	18	4	AOX-003	123	113	100	25	7
40	19	195	140	150	110	18	4	AOX-003	123	113	100	25	8.5
50	19	210	150	165	125	18	4	AOX-005	160	121	121	25	13
65	19	220	170	185	145	18	4	AOX-008	160	121	121	25	16
80	19	250	180	200	160	18	8	AOX-015	189	129	145	25	20.5
100	19	265	190	220	180	18	8	AOX-015	189	129	145	25	25
125	19	330	200	250	210	18	8	AOX-030	268	164	200	25	42
150	19	350	210	285	240	22	8	AOX-040	268	164	200	25	53
200	20	400	400	340	295	22	12	AOX-100	268	164	200	25	108

ESECUZIONE FLANGE ØD PIANA(FF) GRADINO(RF)
FLANGES EXECUTION ØD FLAT(FF) STEP(RF)

ESECUZIONE PN6, ANSI150 SU RICHIESTA
EXECUTION NP6, ANSI150 ON REQUEST

		S2.300(FF)-(RF)	S2.322(FF)-(RF)	S2.777(FF)-(RF)
		B/O	B/316	BA/BA
ITEM	DENOMINAZIONE DENOMINATION	MATERIALE MATERIAL	MATERIALE MATERIAL	MATERIALE MATERIAL
01	Body	Bronze UNI EN1982 G-CuSn5Zn5Pb5	Bronze UNI EN1982 G-CuSn5Zn5Pb5	Alu Bronze UNI EN1982 G-CuAl10Ni5Fe5
02	Lateral	Bronze UNI EN1982 G-CuSn5Zn5Pb5	Bronze UNI EN1982 G-CuSn5Zn5Pb5	Alu Bronze UNI EN1982 G-CuAl10Ni5Fe5
03	Stem	Brass CW617N (OT58)	Stainless steel AISI316 UNI EN10088	Alu Bronze UNI EN1982 G-CuAl10Ni5Fe4
04	Ball	Brass CW617N (OT58)	Stainless steel AISI316 UNI EN10088	Alu Bronze UNI EN1982 G-CuAl10Ni5Fe5

		S2.722(FF)-(RF)	S2.377(FF)-(RF)	S2.000 (RF)
		BA/316	B/BA	G/O
ITEM	DENOMINAZIONE DENOMINATION	MATERIALE MATERIAL	MATERIALE MATERIAL	MATERIALE MATERIAL
01	Body	Alu Bronze UNI EN1982 G-CuAl10Ni5Fe5	Bronze UNI EN1982 G-CuSn5Zn5Pb5	Cast iron UNI EN1561 EN-GJL-250
02	Lateral	Alu Bronze UNI EN1982 G-CuAl10Ni5Fe5	Bronze UNI EN1982 G-CuSn5Zn5Pb5	Cast iron UNI EN1561 EN-GJL-250
03	Stem	Stainless steel AISI316 UNI EN10088	Alu Bronze UNI EN1982 G-CuAl10Ni5Fe4	Brass CW617N (OT58)
04	Ball	Stainless steel AISI316 UNI EN10088	Alu Bronze UNI EN1982 G-CuAl10Ni5Fe5	Brass CW617N (OT58)

		S2.021 (RF)	S2.100 (RF)	S2.121 (RF)
		G/316	GS/O	GS/316
ITEM	DENOMINAZIONE DENOMINATION	MATERIALE MATERIAL	MATERIALE MATERIAL	MATERIALE MATERIAL
01	Body	Cast iron UNI EN1561 EN-GJL-250	Nodular cast iron EN-GJS-400-15U UNI EN1563	Nodular cast iron EN-GJS-400-15U UNI EN1563
02	Lateral	Cast iron UNI EN1561 EN-GJL-250	Nodular cast iron EN-GJS-400-15U UNI EN1563	Nodular cast iron EN-GJS-400-15U UNI EN1563
03	Stem	Stainless steel AISI304 UNI EN10088	Brass CW617N (OT58)	Stainless steel AISI304 UNI EN10088
04	Ball	Stainless steel AISI316 UNI EN10088	Brass CW617N (OT58)	Stainless steel AISI316 UNI EN10088

Nota: Combinazioni materiali non standard a richiesta
Note: Non standard materials combinations on request

Valvole a sfera flangiate PN16 con motore elettrico
Ball valves flanged NP16 with electric motor

Art.S2ME/PS

Conform to:
UNI EN1092

DN20÷40

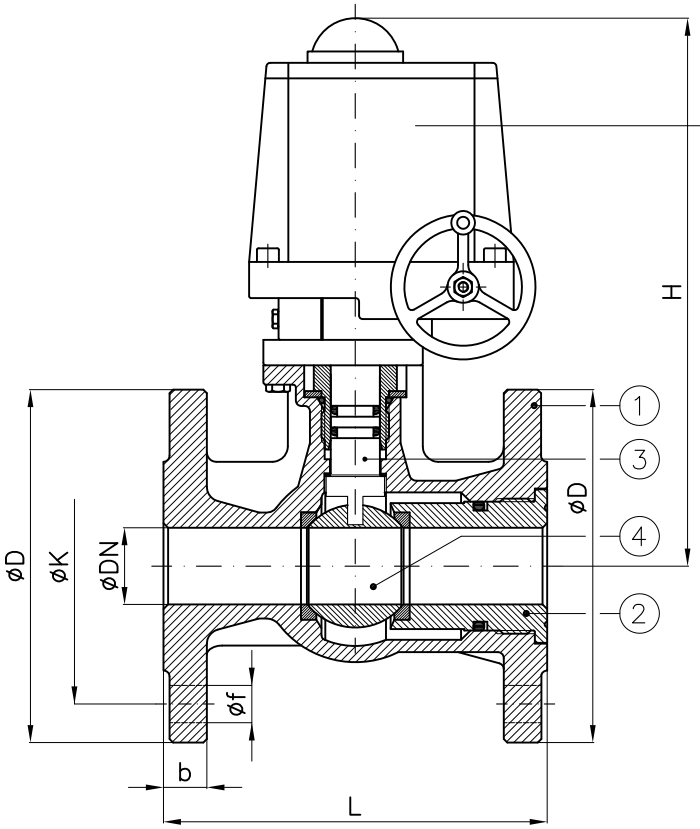

DN50÷150

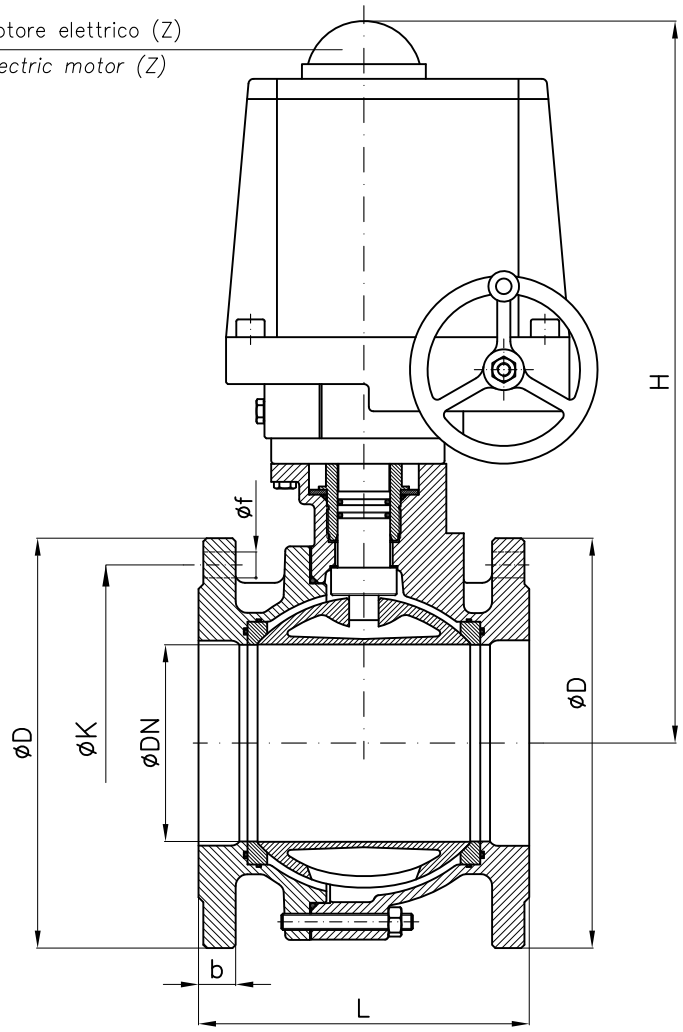

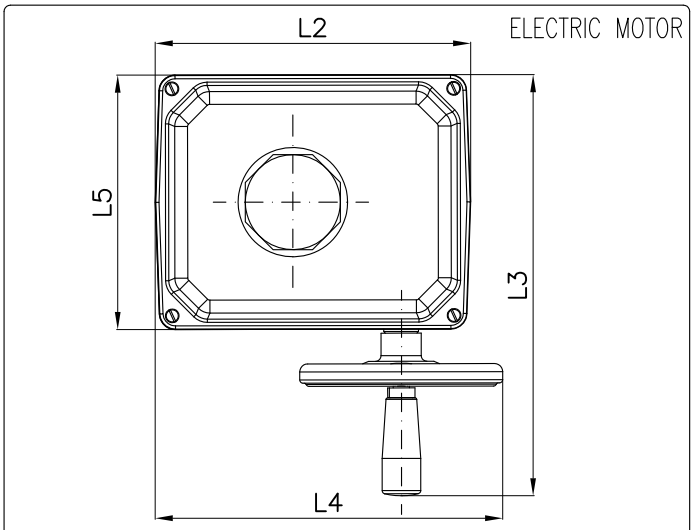

La scelta del motore dipende dalla pressione di esercizio dell'impianto
The choice of the motor depends from plant working pressure

S2.300	**B/O**
S2.322	**B/316**
S2.777	**BA/BA**
S2.722	**BA/316**
S2.377	**B/BA**
S2.000	**G/O**
S2.021	**G/316**
S2.100	**GS/O**
S2.121	**GS/316**

DN	b	H (~)	L	D	K	f	Holes NO. f	Z	L2	L3	L4	L5	Weight (Kg)
20	16	320	120	105	75	14	4	PSQ-E100	196	263	216	158	9
25	16	325	125	115	85	14	4	PSQ-E100	196	263	216	158	10
32	18	330	130	140	100	18	4	PSQ-E100	196	263	216	158	11
40	19	345	140	150	110	18	4	PSQ-E100	196	263	216	158	12.5
50	19	355	150	165	125	18	4	PSQ-E100	196	263	216	158	15
65	19	360	170	185	145	18	4	PSQ-E150	196	263	216	158	18.5
80	19	385	180	200	160	18	8	PSQ-E150	196	263	216	158	21.5
100	19	490	190	220	180	18	8	PSQ203	227	305	277	186	31.5
125	19	525	200	250	210	18	8	PSQ203	227	305	277	186	39.5
150	19	600	210	285	240	22	8	PSQ503	278	416	328	235	66

ESECUZIONE FLANGE ØD PIANA(FF) GRADINO(RF)
FLANGES EXECUTION ØD FLAT(FF) STEP(RF)

ESECUZIONE PN6, ANSI150 SU RICHIESTA
EXECUTION NP6, ANSI150 ON REQUEST

		S2.300(FF)-(RF)	S2.322(FF)-(RF)	S2.777(FF)-(RF)
		B/O	B/316	BA/BA
ITEM	DENOMINAZIONE DENOMINATION	MATERIALE MATERIAL	MATERIALE MATERIAL	MATERIALE MATERIAL
01	Body	Bronze UNI EN1982 G-CuSn5Zn5Pb5	Bronze UNI EN1982 G-CuSn5Zn5Pb5	Alu Bronze UNI EN1982 G-CuAl10Ni5Fe5
02	Lateral	Bronze UNI EN1982 G-CuSn5Zn5Pb5	Bronze UNI EN1982 G-CuSn5Zn5Pb5	Alu Bronze UNI EN1982 G-CuAl10Ni5Fe5
03	Stem	Brass CW617N (OT58)	Stainless steel AISI316 UNI EN10088	Alu Bronze UNI EN1982 G-CuAl10Ni5Fe4
04	Ball	Brass CW617N (OT58)	Stainless steel AISI316 UNI EN10088	Alu Bronze UNI EN1982 G-CuAl10Ni5Fe5

		S2.722(FF)-(RF)	S2.377(FF)-(RF)	S2.000 (RF)
		BA/316	B/BA	G/O
ITEM	DENOMINAZIONE DENOMINATION	MATERIALE MATERIAL	MATERIALE MATERIAL	MATERIALE MATERIAL
01	Body	Alu Bronze UNI EN1982 G-CuAl10Ni5Fe5	Bronze UNI EN1982 G-CuSn5Zn5Pb5	Cast iron UNI EN1561 EN-GJL-250
02	Lateral	Alu Bronze UNI EN1982 G-CuAl10Ni5Fe5	Bronze UNI EN1982 G-CuSn5Zn5Pb5	Cast iron UNI EN1561 EN-GJL-250
03	Stem	Stainless steel AISI316 UNI EN10088	Alu Bronze UNI EN1982 G-CuAl10Ni5Fe4	Brass CW617N (OT58)
04	Ball	Stainless steel AISI316 UNI EN10088	Alu Bronze UNI EN1982 G-CuAl10Ni5Fe5	Brass CW617N (OT58)

		S2.021 (RF)	S2.100 (RF)	S2.121 (RF)
		G/316	GS/O	GS/316
ITEM	DENOMINAZIONE DENOMINATION	MATERIALE MATERIAL	MATERIALE MATERIAL	MATERIALE MATERIAL
01	Body	Cast iron UNI EN1561 EN-GJL-250	Nodular cast iron EN-GJS-400-15U UNI EN1563	Nodular cast iron EN-GJS-400-15U UNI EN1563
02	Lateral	Cast iron UNI EN1561 EN-GJL-250	Nodular cast iron EN-GJS-400-15U UNI EN1563	Nodular cast iron EN-GJS-400-15U UNI EN1563
03	Stem	Stainless steel AISI316 UNI EN10088	Brass CW617N (OT58)	Stainless steel AISI316 UNI EN10088
04	Ball	Stainless steel AISI316 UNI EN10088	Brass CW617N (OT58)	Stainless steel AISI316 UNI EN10088

Nota: Combinazioni materiali non standard a richiesta
Note: Non standard materials combinations on request

Valvole a sfera flangiate PN16 con motore elettrico
Ball valves flanged NP16 with electric motor

Art.S2ME/VAL

Conform to:
UNI EN1092

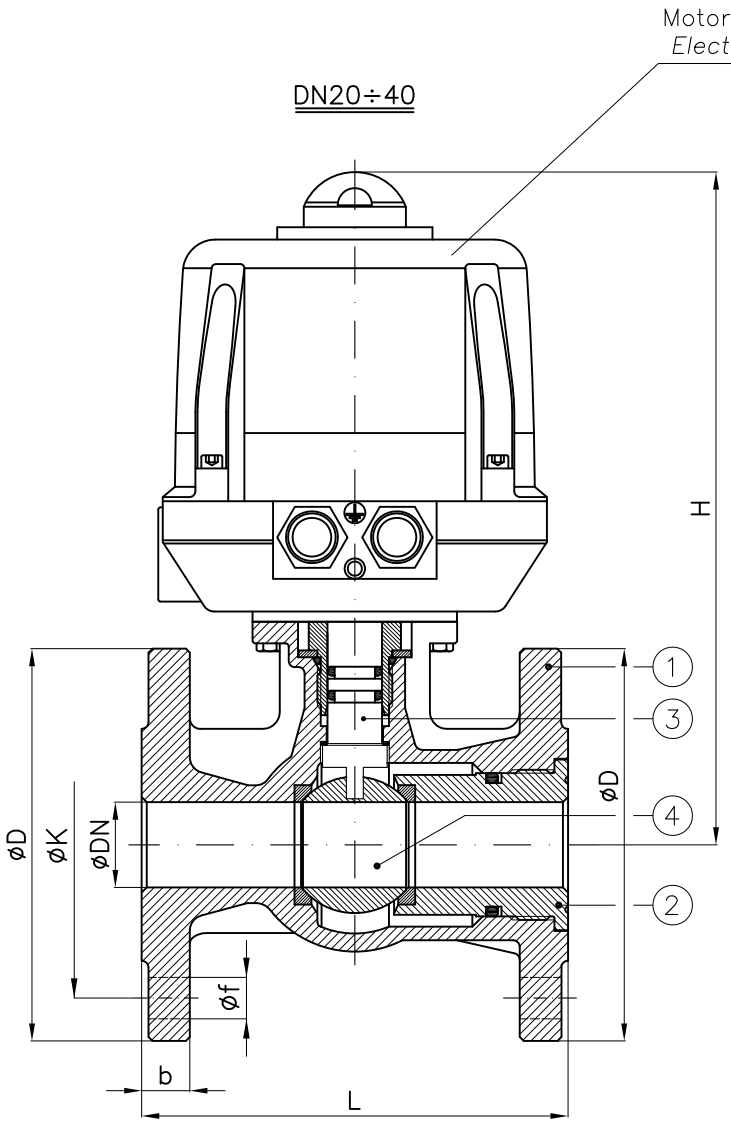

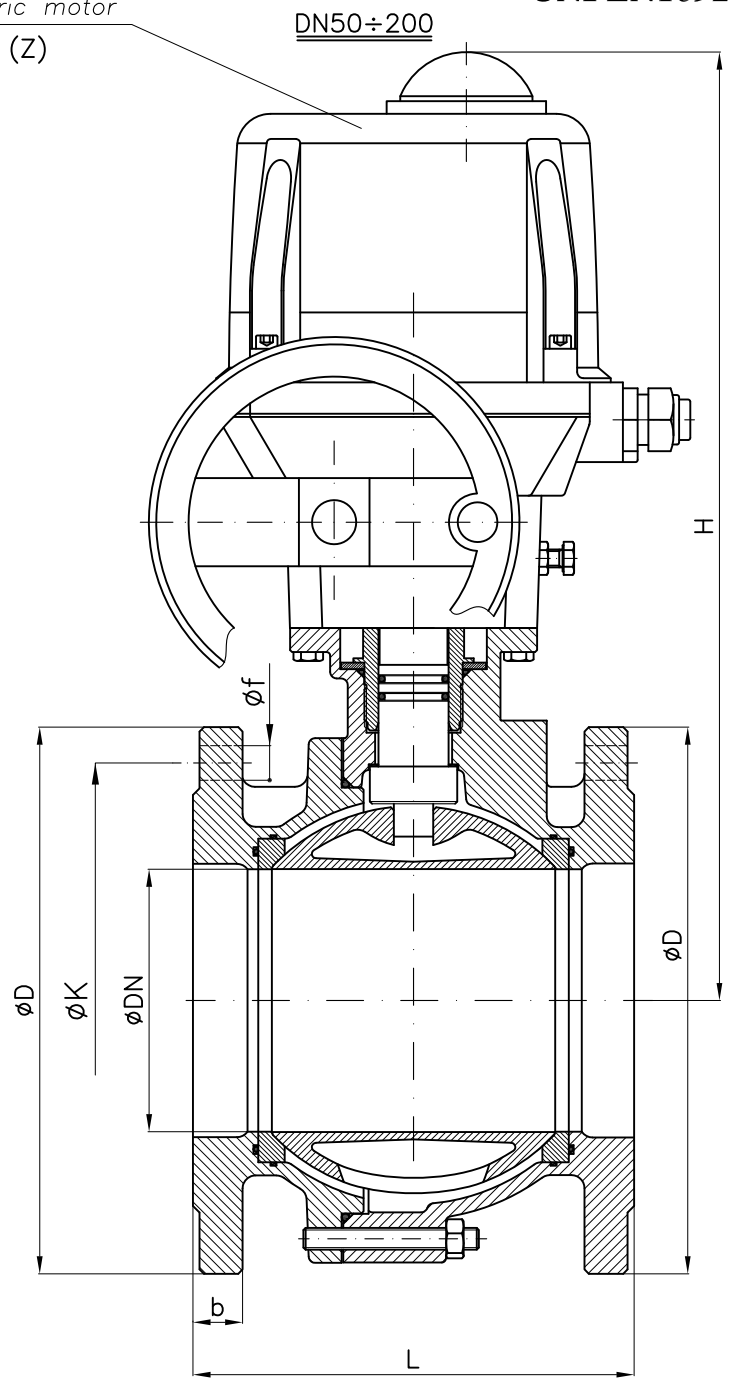

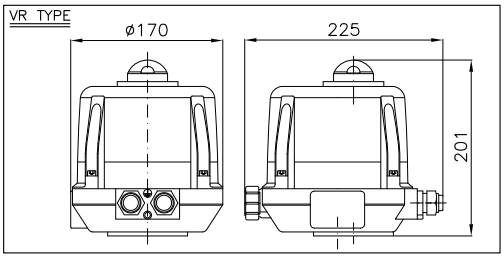

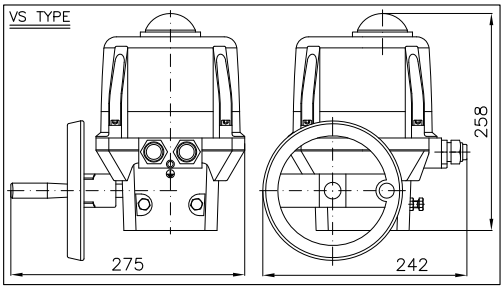

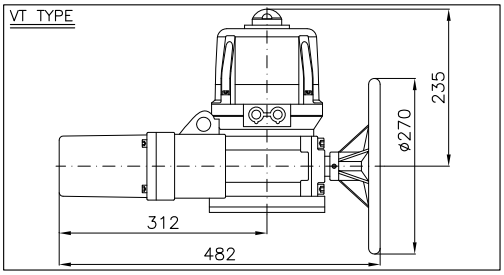

La scelta del motore dipende dalla pressione di esercizio dell'impianto
The choice of the motor depends from plant working pressure

DN	b	H (~)	L	D	K	f	Holes NO. f	Z	Weight (Kg)
20	16	255	120	105	75	14	4	VR25	7
25	16	260	125	115	85	14	4	VR25	8
32	18	265	130	140	100	18	4	VR25	9.5
40	19	280	140	150	110	18	4	VR25	11.5
50	19	290	150	165	125	18	4	VR45	13.5
65	19	300	170	185	145	18	4	VR75	16
80	19	380	180	200	160	18	8	VS100	23
100	19	390	190	220	180	18	8	VS150	28
125	19	425	200	250	210	18	8	VS300	41.5
150	19	490	210	285	240	22	8	VT600	68
200	20	540	400	340	295	22	12	VT1000	152

Valvole a sfera flangiate PN16 con motore elettrico
Ball valves flanged NP16 with electric motor

Art.S2ME/VAL

S2.300	**B/O**	**S2.722**	**BA/316**	**S2.021**	**G/316**
S2.322	**B/316**	**S2.377**	**B/BA**	**S2.100**	**GS/O**
S2.777	**BA/BA**	**S2.000**	**G/O**	**S2.121**	**GS/316**

ESECUZIONE FLANGE ØD PIANA(FF) GRADINO(RF)
FLANGES EXECUTION ØD FLAT(FF) STEP(RF)

ESECUZIONE PN6, ANSI150 SU RICHIESTA
EXECUTION NP6, ANSI150 ON REQUEST

		S2.300(FF)-(RF)	S2.322(FF)-(RF)	S2.777(FF)-(RF)
		B/O	B/316	BA/BA
ITEM	DENOMINAZIONE DENOMINATION	MATERIALE MATERIAL	MATERIALE MATERIAL	MATERIALE MATERIAL
01	Body	Bronze UNI EN1982 G-CuSn5Zn5Pb5	Bronze UNI EN1982 G-CuSn5Zn5Pb5	Alu Bronze UNI EN1982 G-CuAl10Ni5Fe5
02	Lateral	Bronze UNI EN1982 G-CuSn5Zn5Pb5	Bronze UNI EN1982 G-CuSn5Zn5Pb5	Alu Bronze UNI EN1982 G-CuAl10Ni5Fe5
03	Stem	Brass CW617N (OT58)	Stainless steel AISI316 UNI EN10088	Alu Bronze UNI EN1982 G-CuAl10Ni5Fe4
04	Ball	Brass CW617N (OT58)	Stainless steel AISI316 UNI EN10088	Alu Bronze UNI EN1982 G-CuAl10Ni5Fe5

		S2.722(FF)-(RF)	S2.377(FF)-(RF)	S2.000 (RF)
		BA/316	B/BA	G/O
ITEM	DENOMINAZIONE DENOMINATION	MATERIALE MATERIAL	MATERIALE MATERIAL	MATERIALE MATERIAL
01	Body	Alu Bronze UNI EN1982 G-CuAl10Ni5Fe5	Bronze UNI EN1982 G-CuSn5Zn5Pb5	Cast iron UNI EN1561 EN-GJL-250
02	Lateral	Alu Bronze UNI EN1982 G-CuAl10Ni5Fe5	Bronze UNI EN1982 G-CuSn5Zn5Pb5	Cast iron UNI EN1561 EN-GJL-250
03	Stem	Stainless steel AISI316 UNI EN10088	Alu Bronze UNI EN1982 G-CuAl10Ni5Fe4	Brass CW617N (OT58)
04	Ball	Stainless steel AISI316 UNI EN10088	Alu Bronze UNI EN1982 G-CuAl10Ni5Fe5	Brass CW617N (OT58)

		S2.021 (RF)	S2.100 (RF)	S2.121 (RF)
		G/316	GS/O	GS/316
ITEM	DENOMINAZIONE DENOMINATION	MATERIALE MATERIAL	MATERIALE MATERIAL	MATERIALE MATERIAL
01	Body	Cast iron UNI EN1561 EN-GJL-250	Nodular cast iron EN-GJS-400-15U UNI EN1563	Nodular cast iron EN-GJS-400-15U UNI EN1563
02	Lateral	Cast iron UNI EN1561 EN-GJL-250	Nodular cast iron EN-GJS-400-15U UNI EN1563	Nodular cast iron EN-GJS-400-15U UNI EN1563
03	Stem	Stainless steel AISI304 UNI EN10088	Brass CW617N (OT58)	Stainless steel AISI304 UNI EN10088
04	Ball	Stainless steel AISI316 UNI EN10088	Brass CW617N (OT58)	Stainless steel AISI316 UNI EN10088

Nota: Combinazioni materiali non standard a richiesta
Note: Non standard materials combinations on request

Valvole a sfera SPLIT BODY, passaggio totale flangiate PN6-16-40-ANSI150 con motore elettrico

Ball valves SPLIT BODY, full bore flanged NP6-16-40-ANSI150 with electric motor

Tab.200 ME/BER

Tab 200A–ME/VAL: ANSI150
Tab 200B–ME/VAL: PN6–16–40

Conform to:

DIN 3202
ANSI B16.34
ANSI B16.5
UNI EN 1092

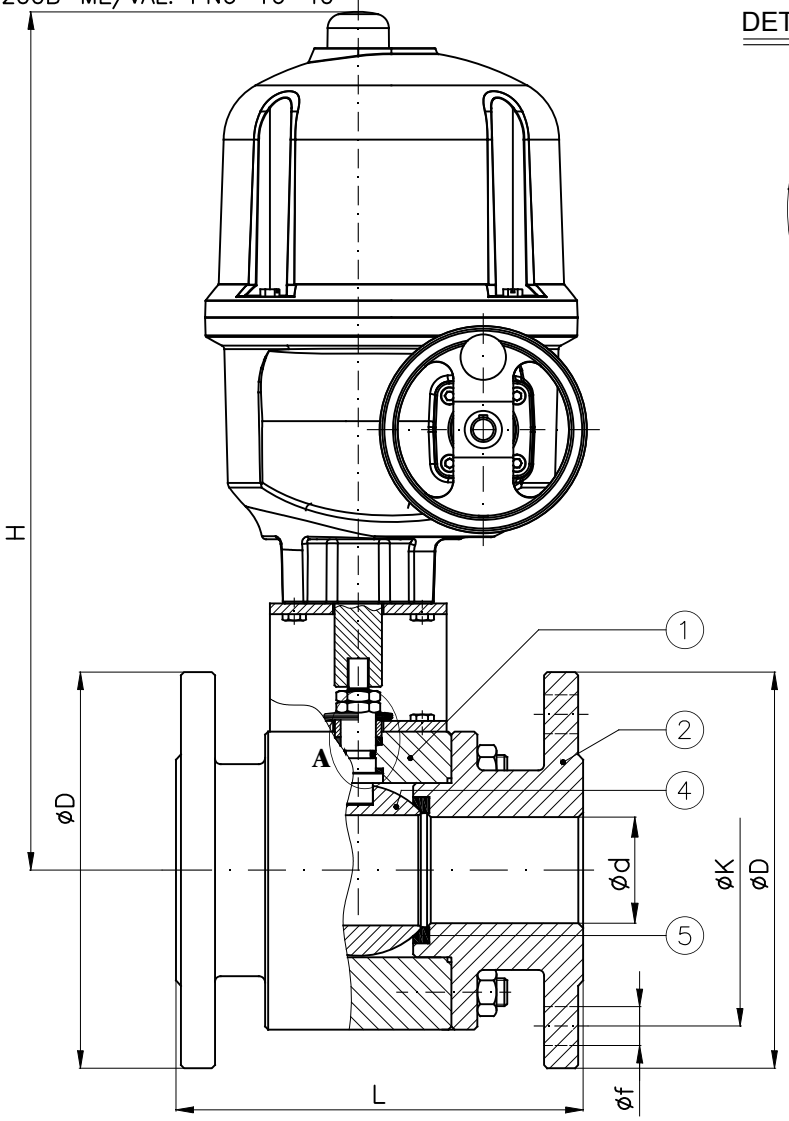

DETAIL - DETTAGLIO "A"

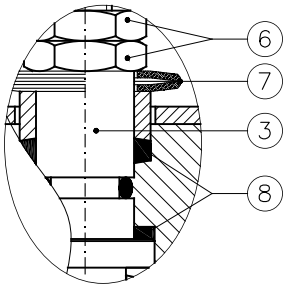

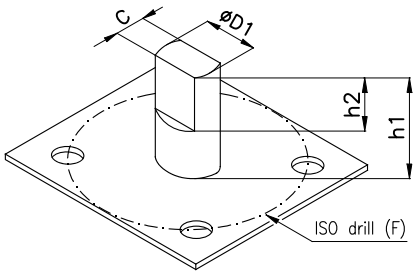

DN		D1xC	h1	h2	ISO–F
15	1/2"	10x5.5	19	8	F03
20	3/4"	12x7.5	27	9	F04
25	1"	12x7.5	25	10	F04
32	1"1/4	14x9	41	16	F04
40	1"1/2	14x9	41	16	F04
50	2"	14x9	37	15	F05
65	2"1/2	22x14	57	24	F07
80	3"	22x14	60	28	F07
100	4"	30x18	70	26	F07

					Tab. 200B–ME/VAL		Tab. 200A–ME/VAL		PN6 – NP6				PN16 – NP16				PN40–NP40				ANSI150			
DN		Electric motor	d	H (~)	L PN6–16–40	Weight (Kg)	L ANSI150	Weight (Kg)	D	K	f	Holes NO. f	D	K	f	Holes NO. f	D	K	f	Holes NO. f	D	K	f	Holes NO. f
15	1/2"	AQ5	14	380	115	13.5	108	13	80	55	11	4	95	65	14	4	95	65	14	4	88.9	60	16	4
20	3/4"	AQ5	19	385	120	14.5	117	14.5	90	65	11	4	105	75	14	4	105	75	14	4	98.4	70	16	4
25	1"	AQ5	25	390	125	16.5	127	16.5	100	75	11	4	115	85	14	4	115	85	14	4	108	79	16	4
32	1"1/4	AQ5	32	395	130	18	140	19	120	90	14	4	140	100	18	4	140	100	18	4	118	89	16	4
40	1"1/2	AQ5	38	400	140	23	165	24	130	100	14	4	150	110	18	4	150	110	18	4	127	98	16	4
50	2"	AQ10	48	410	150	25	178	28	140	110	14	4	165	125	18	4	165	125	18	4	152	121	19	4
65	2"1/2	AQ15	65	425	170	32	190	33	160	130	14	4	185	145	18	4	185	145	18	8	178	140	19	4
80	3"	AQ15	76	435	180	33	203	41	190	150	18	4	200	160	18	8	200	160	18	8	190	152	19	4
100	4"	AQ25	95	495	190	50	229	54	210	170	18	4	220	180	18	8	235	190	22	8	229	191	19	8

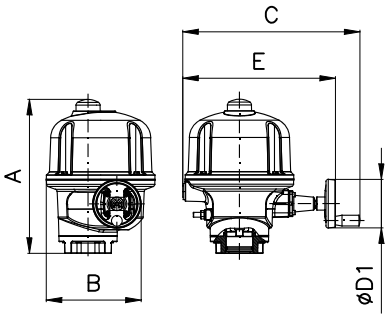

	A	B	C	E	ØD1
AQ5/10/15	286	184	276	225	100
AQ25	317	224	365	315	100

Combinazione materiali standard – Standard materials Combination			
		A/316	316/316
ITEM	DENOMINAZIONE DENOMINATION	MATERIALE MATERIAL	MATERIALE MATERIAL
01	Body	Forged steel ASTM A105N	Stainless steel AISI316 UNI EN10088
02	Lateral	Forged steel ASTM A105N	Stainless steel AISI316 UNI EN10088
03	Stem	Stainless steel AISI316 UNI EN10088	Stainless steel AISI316 UNI EN10088
04	Ball	Stainless steel AISI316/304 UNI EN10088	Stainless steel AISI316 UNI EN10088
05	Seat	PTFE/RPTFE	PTFE/RPTFE
06	Nuts	Galvanized Steel 8.8 EN20898–1	Galvanized Steel 8.8 EN20898–1
07	Socket springs	Galvanized Steel	Galvanized Steel
08	Stem seals	RPTFE	RPTFE

Nota: Combinazioni materiali non standard a richiesta
Note: Non standard materials combinations on request

Valvole a sfera flangiate PN16 con motore elettrico
Ball valves flanged NP16 with electric motor

Art.S2ME/BER

Conform to:
UNI EN1092

DN20÷40

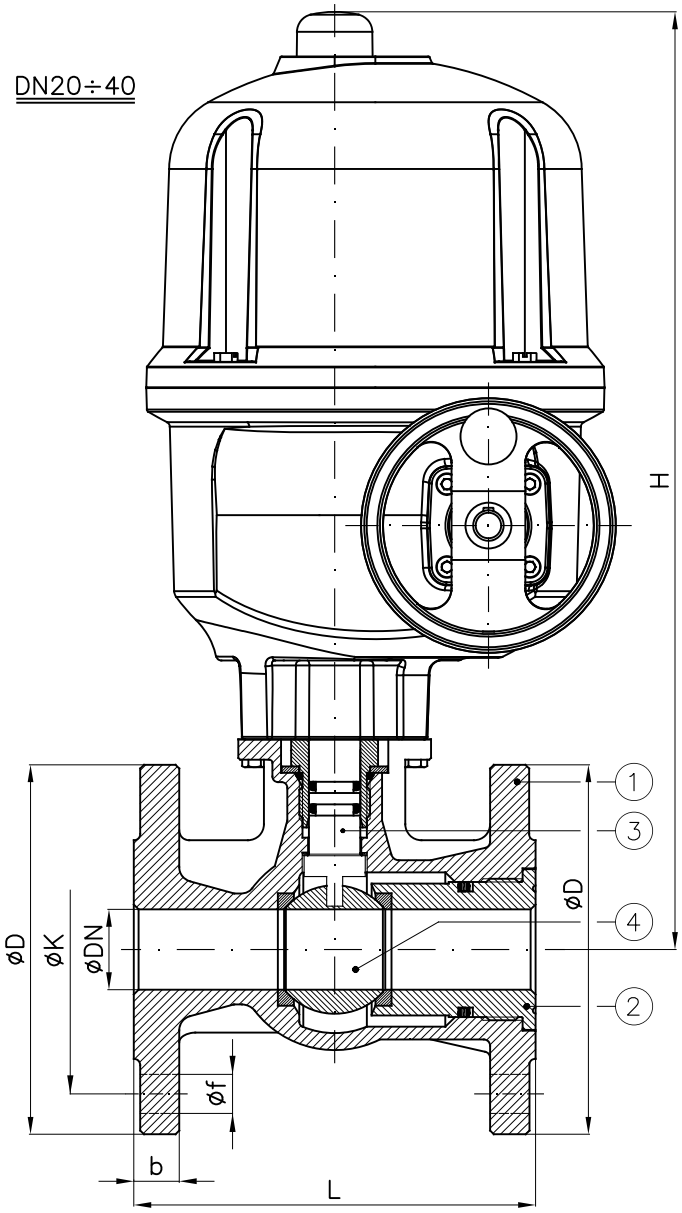

DN50÷200

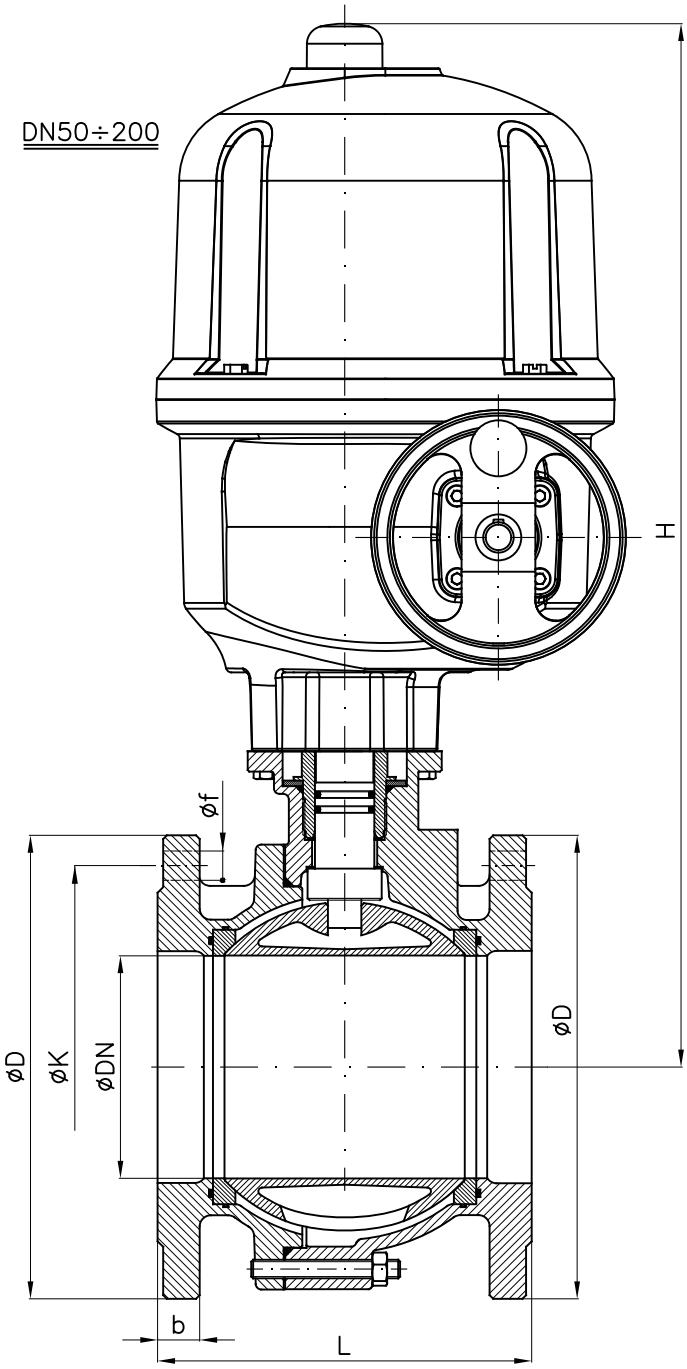

	A	B	C	E	ØD1
AQ5/10/15	286	184	276	225	100
AQ30	328	260	427	347	160
AQ50	328	260	427	347	200

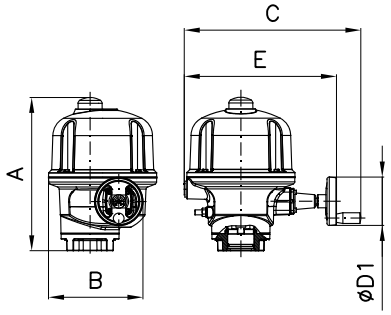

La scelta del motore dipende dalla pressione di esercizio dell'impianto
The choice of the motor depends from plant working pressure

DN	b	H (~)	L	D	K	f	Holes NO. f	Electric motor	Weight (Kg)
20	16	340	120	105	75	14	4	AQ5	13
25	16	345	125	115	85	14	4	AQ5	15
32	18	350	130	140	100	18	4	AQ5	16
40	19	365	140	150	110	18	4	AQ5	19
50	19	375	150	165	125	18	4	AQ5	21
65	19	385	170	185	145	18	4	AQ10	26
80	19	405	180	200	160	18	8	AQ15	31
100	19	420	190	220	180	18	8	AQ15	38
125	19	495	200	250	210	18	8	AQ30	56
150	19	515	210	285	240	22	8	AQ50	67

Valvole a sfera flangiate PN16 con motore elettrico
Ball valves flanged NP16 with electric motor

Art.S2ME/BER

S2.300	**B/O**	**S2.722**	**BA/316**	**S2.021**	**G/316**
S2.322	**B/316**	**S2.377**	**B/BA**	**S2.100**	**GS/O**
S2.777	**BA/BA**	**S2.000**	**G/O**	**S2.121**	**GS/316**

ESECUZIONE FLANGE ØD PIANA(FF) GRADINO(RF)
FLANGES EXECUTION ØD FLAT(FF) STEP(RF)

ESECUZIONE PN6, ANSI150 SU RICHIESTA
EXECUTION NP6, ANSI150 ON REQUEST

		S2.300(FF)-(RF)	S2.322(FF)-(RF)	S2.777(FF)-(RF)
		B/O	B/316	BA/BA
ITEM	DENOMINAZIONE DENOMINATION	MATERIALE MATERIAL	MATERIALE MATERIAL	MATERIALE MATERIAL
01	Body	Bronze UNI EN1982 G-CuSn5Zn5Pb5	Bronze UNI EN1982 G-CuSn5Zn5Pb5	Alu Bronze UNI EN1982 G-CuAl10Ni5Fe5
02	Lateral	Bronze UNI EN1982 G-CuSn5Zn5Pb5	Bronze UNI EN1982 G-CuSn5Zn5Pb5	Alu Bronze UNI EN1982 G-CuAl10Ni5Fe5
03	Stem	Brass CW617N (OT58)	Stainless steel AISI316 UNI EN10088	Alu Bronze UNI EN1982 G-CuAl10Ni5Fe4
04	Ball	Brass CW617N (OT58)	Stainless steel AISI316 UNI EN10088	Alu Bronze UNI EN1982 G-CuAl10Ni5Fe5

		S2.722(FF)-(RF)	S2.377(FF)-(RF)	S2.000 (RF)
		BA/316	B/BA	G/O
ITEM	DENOMINAZIONE DENOMINATION	MATERIALE MATERIAL	MATERIALE MATERIAL	MATERIALE MATERIAL
01	Body	Alu Bronze UNI EN1982 G-CuAl10Ni5Fe5	Bronze UNI EN1982 G-CuSn5Zn5Pb5	Cast iron UNI EN1561 EN-GJL-250
02	Lateral	Alu Bronze UNI EN1982 G-CuAl10Ni5Fe5	Bronze UNI EN1982 G-CuSn5Zn5Pb5	Cast iron UNI EN1561 EN-GJL-250
03	Stem	Stainless steel AISI316 UNI EN10088	Alu Bronze UNI EN1982 G-CuAl10Ni5Fe4	Brass CW617N (OT58)
04	Ball	Stainless steel AISI316 UNI EN10088	Alu Bronze UNI EN1982 G-CuAl10Ni5Fe5	Brass CW617N (OT58)

		S2.021 (RF)	S2.100 (RF)	S2.121 (RF)
		G/316	GS/O	GS/316
ITEM	DENOMINAZIONE DENOMINATION	MATERIALE MATERIAL	MATERIALE MATERIAL	MATERIALE MATERIAL
01	Body	Cast iron UNI EN1561 EN-GJL-250	Nodular cast iron EN-GJS-400-15U UNI EN1563	Nodular cast iron EN-GJS-400-15U UNI EN1563
02	Lateral	Cast iron UNI EN1561 EN-GJL-250	Nodular cast iron EN-GJS-400-15U UNI EN1563	Nodular cast iron EN-GJS-400-15U UNI EN1563
03	Stem	Stainless steel AISI304 UNI EN10088	Brass CW617N (OT58)	Stainless steel AISI304 UNI EN10088
04	Ball	Stainless steel AISI316 UNI EN10088	Brass CW617N (OT58)	Stainless steel AISI316 UNI EN10088

Nota: Combinazioni materiali non standard a richiesta
Note: Non standard materials combinations on request

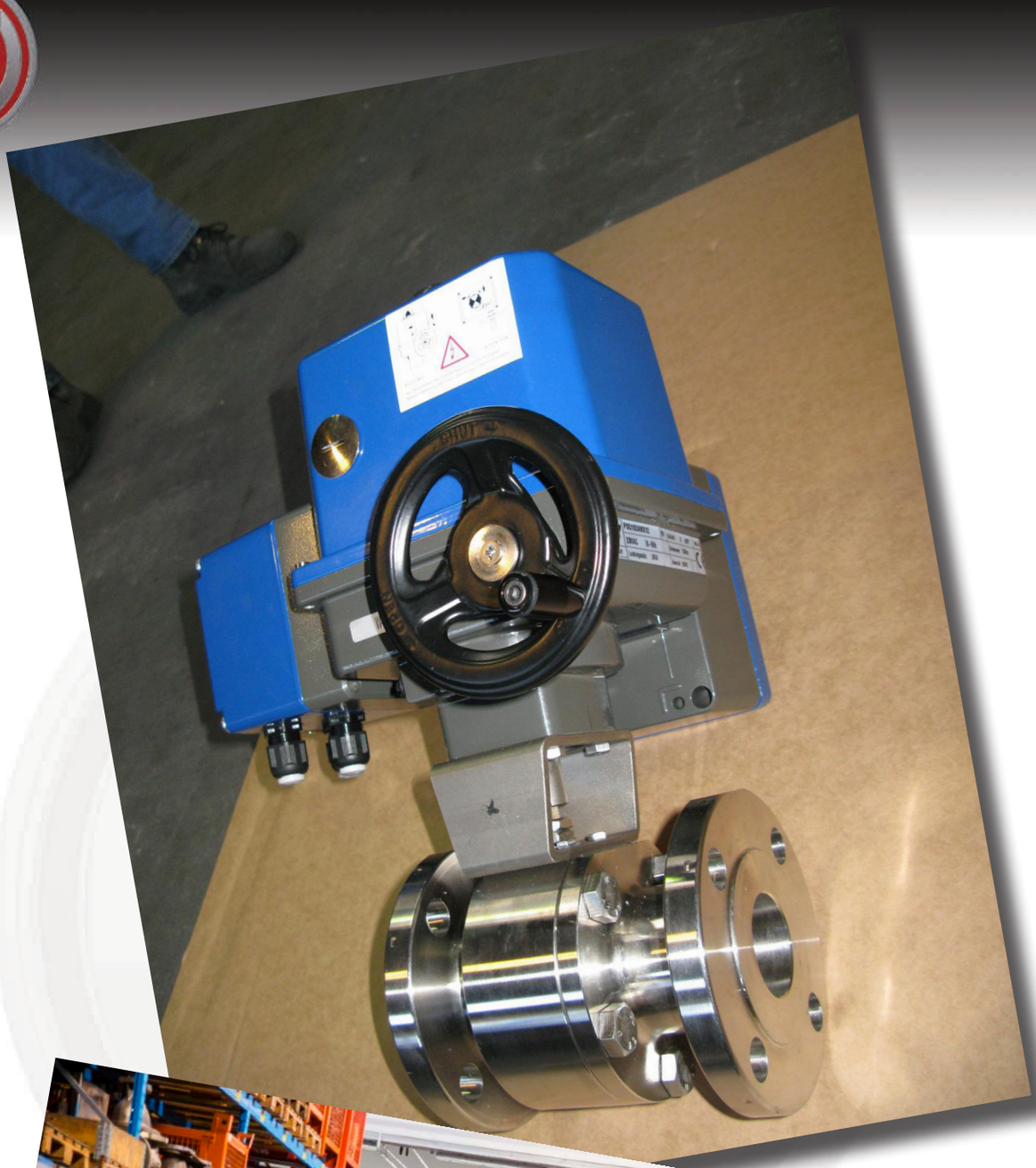

www.medanaevisca.it

Valvole a sfera tipo wafer flangiate PN6-10DIN-16-ANSI150-ANSI300
Ball valves wafer type NP6-10DIN-16-ANSI150-ANSI300

Tab.201

Conform to:
BS 5351 / ISO17292

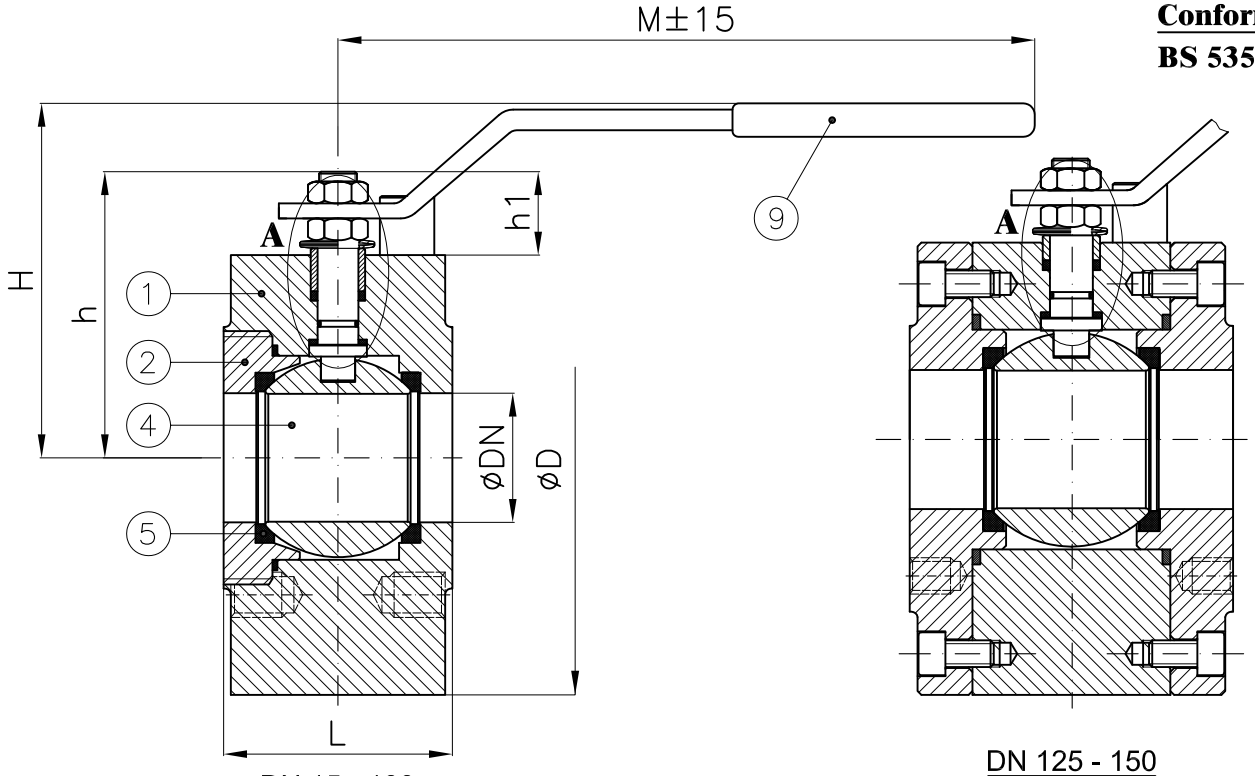

DN 15 - 100

DN 125 - 150

DN		D PN6	D PN16	D ANSI150	D ANSI300	H	h	h1	L	M	Weight (Kg)
15	1/2"	69	88	79	88	78	50	19	35	150	1.5
20	3/4"	79	98	89	108	87	60	23	42	185	2
25	1"	88	108	99	118	91	65	23	46	185	2.7
32	1"1/4	108	128	110	128	106	80	29	55	280	3.8
40	1"1/2	118	138	120	138	111	90	30	66	280	6.5
50	2"	128	148	153	158	120	96	32	72	280	8
65	2"1/2	148	168	168	178	157	132	53	98	380	15
80	3"	178	188	190	198	161	139	48	120	380	20
100	4"	200	220	220	230	181	160	55	140	480	30
125	5"	230	250	250	260	205	180	65	177	480	47
150	6"	280	280	280	300	220	200	68	210	480	69

DETAIL - DETTAGLIO "A"

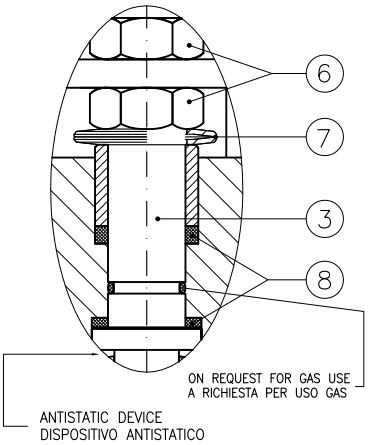

Combinazione materiali standard – Standard materials Combination					
		A/316	316/316	B/316	B/B (Max ND4")
ITEM	DENOMINAZIONE DENOMINATION	MATERIALE MATERIAL	MATERIALE MATERIAL	MATERIALE MATERIAL	MATERIALE MATERIAL
01	Body	Forged steel ASTM A105N	Stainless steel AISI316 UNI EN10088	Bronze UNI EN1982 G–CuSn5Zn5Pb5	Bronze UNI EN1982 G–CuSn5Zn5Pb5
02	Lateral	Forged steel ASTM A105N	Stainless steel AISI316 UNI EN10088	Bronze UNI EN1982 G–CuSn5Zn5Pb5	Bronze UNI EN1982 G–CuSn5Zn5Pb5
03	Stem	Stainless steel AISI316 UNI EN10088	Stainless steel AISI316 UNI EN10088	Stainless steel AISI316 UNI EN10088	Aluminum Bronze (ND≤2") Bronze UNI EN1982 (ND2"1/2 to 4")
04	Ball	Stainless steel AISI316/304 UNI EN10088	Stainless steel AISI316 UNI EN10088	Stainless steel AISI316 UNI EN10088	Bronze UNI EN1982 G–CuSn5Zn5Pb5
05	Seat	PTFE/RPTFE	PTFE/RPTFE	PTFE/RPTFE	PTFE/RPTFE
06	Nuts	Galvanized Steel 8.8 EN20898–1	Galvanized Steel 8.8 EN20898–1	Galvanized Steel 8.8 EN20898–1	Galvanized Steel 8.8 EN20898–1
07	Socket springs	Galvanized Steel	Galvanized Steel	Galvanized Steel	Galvanized Steel
08	Stem seals	RPTFE	RPTFE	RPTFE	RPTFE
09	Hand lever	Galvanized Steel	Galvanized Steel	Galvanized Steel	Galvanized Steel

Nota: Combinazioni materiali non standard a richiesta
Note: Non standard materials combinations on request

Valvole a sfera tipo wafer flangiate PN6-10DIN-16-ANSI150-ANSI300 con attuatore idraulico doppio effetto

Ball valves wafer type NP6-10DIN-16-ANSI150-ANSI300 with hydraulic double acting actuator

Tab.201
Hydr/DA

Conform to:
BS 5351 / ISO17292

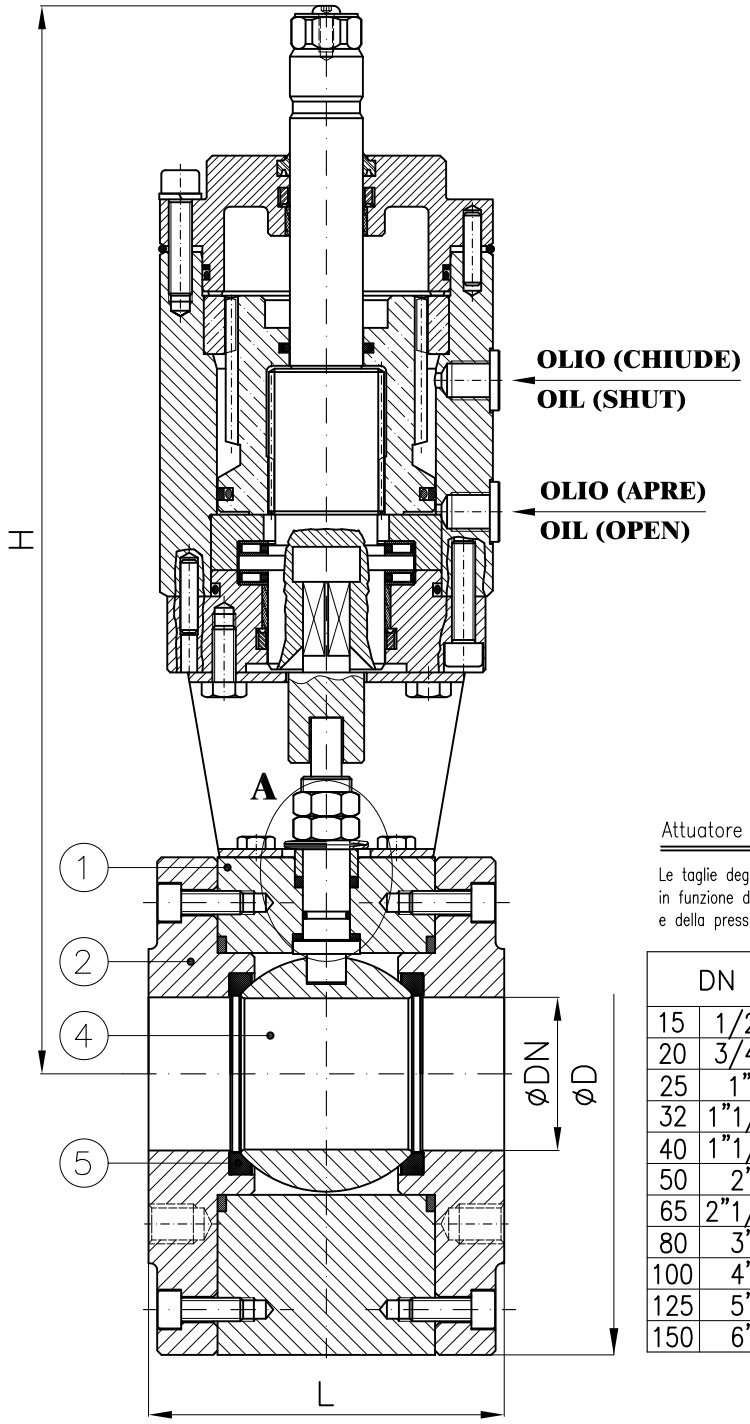

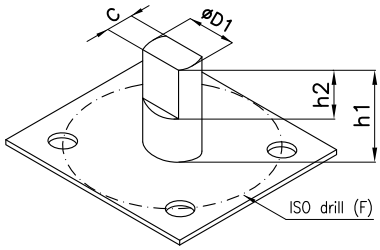

DN		D1xC	h1 (PN6)	h1 (PN16)	h2	ISO–F
15	1/2"	10x5.5	19	19	7	4xM5 Ø35
20	3/4"	12x7.5	25	21	10	F04
25	1"	12x7.5	25	21	10	F04
32	1"1/4	14x9	34	33	10	F05
40	1"1/2	14x9	33	33	10	F05
50	2"	14x9	33	33	10	F05
65	2"1/2	22x14	62	55	13	F07
80	3"	22x14	51	50	13	F07
100	4"	30x18	65	61	13	F07
125	5"	30x18	64	64	24	F10
150	6"	30x18	64	64	20	F10

Attuatore rotante a doppio effetto

Le taglie degli attuatori devono essere verificate in funzione della pressione di esercizio della valvola e della pressione dell'olio del circuito idraulico.

Double acting rotary actuator

The size of the actuator must be checked on the strength of the working pressure of the valve and on the strength of the oil pressure inside the hydraulic circuit.

DN		ATTUATORE *ACTUATOR*	D PN6	D PN16	D ANSI150	D ANSI300	H (~)	L	Weight (Kg)
15	1/2"	ARL4 (RL.05)	69	88	79	88	245	35	5
20	3/4"	ARL4 (RL.05)	79	98	89	108	250	42	5.5
25	1"	ARL4 (RL.05)	88	108	99	118	255	46	7
32	1"1/4	ARL10 (RL.14)	108	128	110	128	320	55	11
40	1"1/2	ARL10 (RL.14)	118	138	120	138	330	66	14
50	2"	ARL10 (RL.14)	128	148	153	158	345	72	16
65	2"1/2	ARL20 (RL.16)	148	168	168	178	360	98	26
80	3"	ARL20 (RL.16)	178	188	190	198	375	120	31
100	4"	ARL45 (RL.26)	200	220	220	230	425	140	46
125	5"	ARL75 (RL.32)	230	250	250	260	460	177	68
150	6"	ARL75 (RL.32)	280	280	280	300	475	210	90

DETAIL - DETTAGLIO "A"

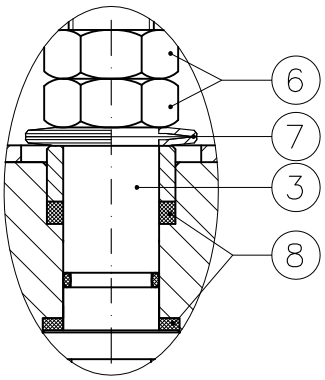

Combinazione materiali standard – Standard materials Combination					
		A/316	316/316	B/316	B/B (Max ND4")
ITEM	DENOMINAZIONE DENOMINATION	MATERIALE MATERIAL	MATERIALE MATERIAL	MATERIALE MATERIAL	MATERIALE MATERIAL
01	Body	Forged steel ASTM A105N	Stainless steel AISI316 UNI EN10088	Bronze UNI EN1982 G–CuSn5Zn5Pb5	Bronze UNI EN1982 G–CuSn5Zn5Pb5
02	Lateral	Forged steel ASTM A105N	Stainless steel AISI316 UNI EN10088	Bronze UNI EN1982 G–CuSn5Zn5Pb5	Bronze UNI EN1982 G–CuSn5Zn5Pb5
03	Stem	Stainless steel AISI316 UNI EN10088	Stainless steel AISI316 UNI EN10088	Stainless steel AISI316 UNI EN10088	Aluminum Bronze (ND≤2") Bronze UNI EN1982 (ND2"1/2 to 4")
04	Ball	Stainless steel AISI316/304 UNI EN10088	Stainless steel AISI316 UNI EN10088	Stainless steel AISI316 UNI EN10088	Bronze UNI EN1982 G–CuSn5Zn5Pb5
05	Seat	PTFE/RPTFE	PTFE/RPTFE	PTFE/RPTFE	PTFE/RPTFE
06	Nuts	Galvanized Steel 8.8 EN20898–1	Galvanized Steel 8.8 EN20898–1	Galvanized Steel 8.8 EN20898–1	Galvanized Steel 8.8 EN20898–1
07	Socket springs	Galvanized Steel	Galvanized Steel	Galvanized Steel	Galvanized Steel
08	Stem seals	RPTFE	RPTFE	RPTFE	RPTFE

Nota: Combinazioni materiali non standard a richiesta
Note: Non standard materials combinations on request

Valvole a sfera tipo wafer flangiate PN6-10DIN-16-ANSI150-ANSI300 con attuatore idraulico semplice effetto

Ball valves wafer type NP6-10DIN-16-ANSI150-ANSI300 with hydraulic single acting actuator

Tab.201 Hydr/SR

Conform to:
BS 5351 / ISO17292

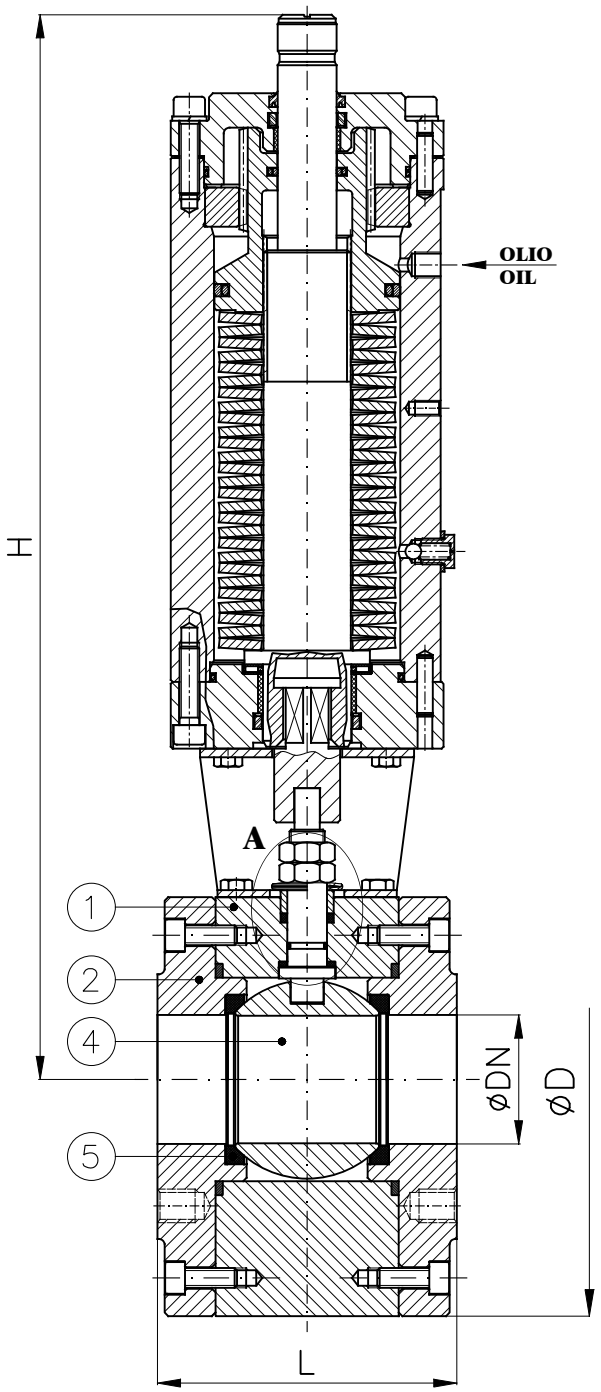

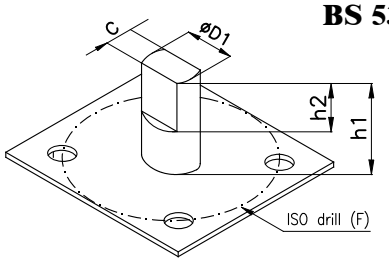

DN		D1xC	h1 (PN6)	h1 (PN16)	h2	ISO–F
15	1/2"	10x5.5	19	19	7	4xM5 Ø35
20	3/4"	12x7.5	25	21	10	F04
25	1"	12x7.5	25	21	10	F04
32	1"1/4	14x9	34	33	10	F05
40	1"1/2	14x9	33	33	10	F05
50	2"	14x9	33	33	10	F05
65	2"1/2	22x14	62	55	13	F07
80	3"	22x14	51	50	13	F07
100	4"	30x18	65	61	13	F07
125	5"	30x18	64	64	24	F10
150	6"	30x18	64	64	20	F10

Attuatore rotante a singolo effetto con ritorno a molla

Le taglie degli attuatori devono essere verificate in funzione della pressione di esercizio della valvola e della pressione dell'olio del circuito idraulico.

Single acting rotary actuator (spring return)

The size of the actuator must be checked on the strength of the working pressure of the valve and on the strength of the oil pressure inside the hydraulic circuit.

DN		ATTUATORE *ACTUATOR*	D PN6	D PN16	D ANSI150	D ANSI300	H (~)	L	Weight (Kg)
15	1/2"	RS.05	69	88	79	88	360	35	14.5
20	3/4"	RS.05	79	98	89	108	365	42	15
25	1"	RS.05	88	108	99	118	370	46	16
32	1"1/4	H.927 (RS.10)	108	128	110	128	420	55	17
40	1"1/2	H.927 (RS.10)	118	138	120	138	440	66	19.5
50	2"	H.927 (RS.10)	128	148	153	158	445	72	21
65	2"1/2	H.929 (RS.13)	148	168	168	178	515	98	28
80	3"	H.929 (RS.13)	178	188	190	198	525	120	36
100	4"	RS.21	200	220	220	230	625	140	50
125	5"	H.941 (RS.26)	230	250	250	260	675	177	72
150	6"	H.941 (RS.26)	280	280	280	300	690	210	95

DETAIL - DETTAGLIO "A"

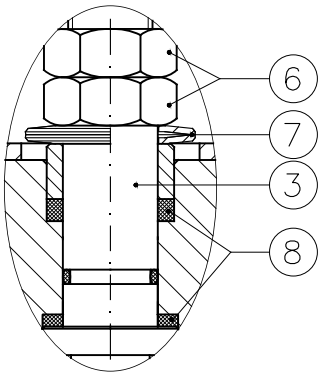

Combinazione materiali standard – Standard materials Combination					
		A/316	316/316	B/316	B/B (Max ND4")
ITEM	DENOMINAZIONE DENOMINATION	MATERIALE MATERIAL	MATERIALE MATERIAL	MATERIALE MATERIAL	MATERIALE MATERIAL
01	Body	Forged steel ASTM A105N	Stainless steel AISI316 UNI EN10088	Bronze UNI EN1982 G–CuSn5Zn5Pb5	Bronze UNI EN1982 G–CuSn5Zn5Pb5
02	Lateral	Forged steel ASTM A105N	Stainless steel AISI316 UNI EN10088	Bronze UNI EN1982 G–CuSn5Zn5Pb5	Bronze UNI EN1982 G–CuSn5Zn5Pb5
03	Stem	Stainless steel AISI316 UNI EN10088	Stainless steel AISI316 UNI EN10088	Stainless steel AISI316 UNI EN10088	Aluminum Bronze (ND≤2") Bronze UNI EN1982 (ND2"1/2 to 4")
04	Ball	Stainless steel AISI316/304 UNI EN10088	Stainless steel AISI316 UNI EN10088	Stainless steel AISI316 UNI EN10088	Bronze UNI EN1982 G–CuSn5Zn5Pb5
05	Seat	PTFE/RPTFE	PTFE/RPTFE	PTFE/RPTFE	PTFE/RPTFE
06	Nuts	Galvanized Steel 8.8 EN20898–1	Galvanized Steel 8.8 EN20898–1	Galvanized Steel 8.8 EN20898–1	Galvanized Steel 8.8 EN20898–1
07	Socket springs	Galvanized Steel	Galvanized Steel	Galvanized Steel	Galvanized Steel
08	Stem seals	RPTFE	RPTFE	RPTFE	RPTFE

Nota: Combinazioni materiali non standard a richiesta
Note: Non standard materials combinations on request

Conform to:
BS 5351 / ISO17292

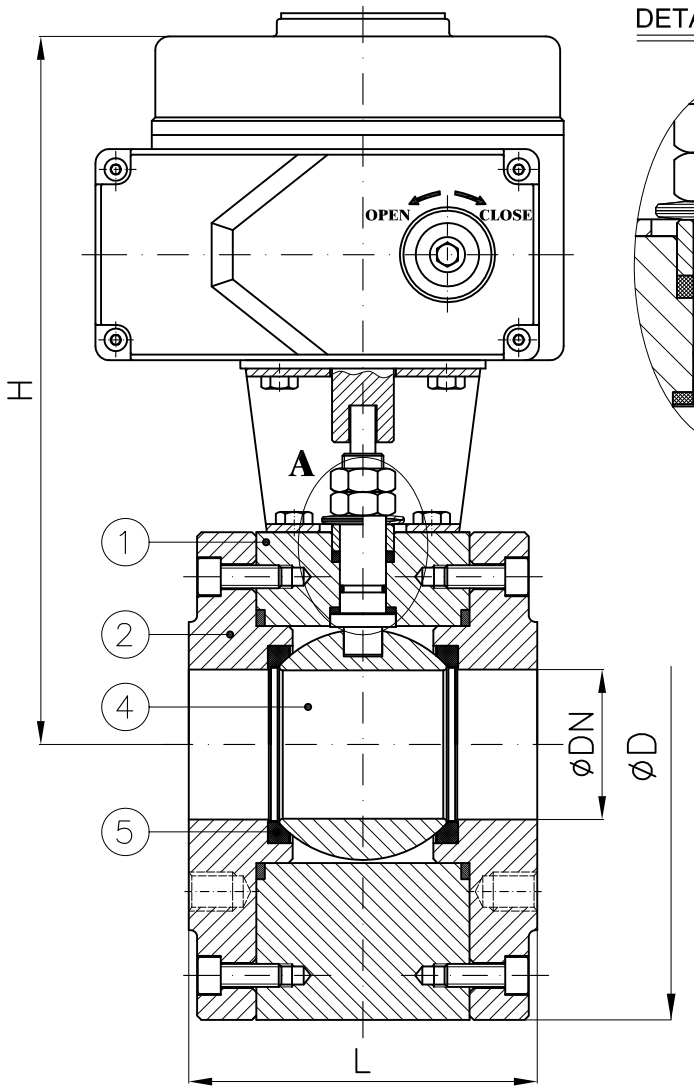

DETAIL - DETTAGLIO "A"

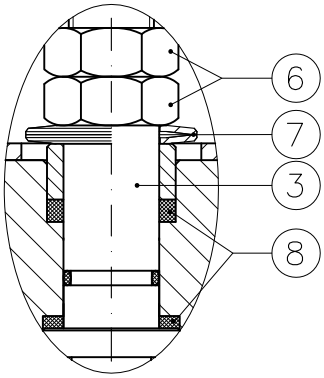

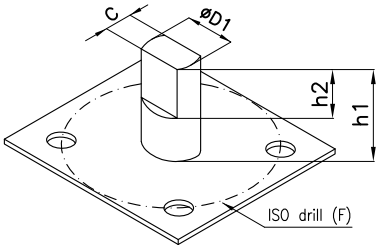

DN		D1xC	h1 (PN6)	h1 (PN16)	h2	ISO–F
15	1/2"	10x5.5	19	19	7	4xM5 ø35
20	3/4"	12x7.5	25	21	10	F04
25	1"	12x7.5	25	21	10	F04
32	1"1/4	14x9	34	33	10	F05
40	1"1/2	14x9	33	33	10	F05
50	2"	14x9	33	33	10	F05
65	2"1/2	22x14	62	55	13	F07
80	3"	22x14	51	50	13	F07
100	4"	30x18	65	61	13	F07
125	5"	30x18	64	64	24	F10
150	6"	30x18	64	64	20	F10

ELECTRIC MOTOR

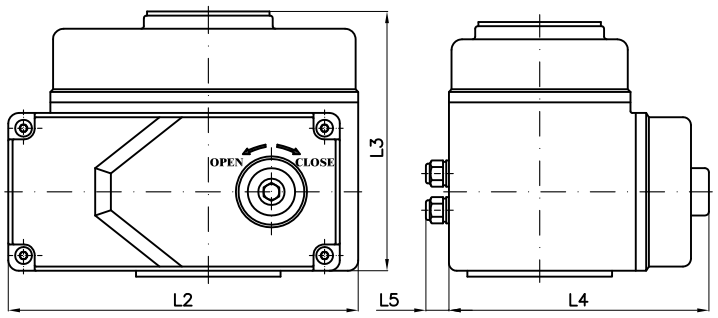

La scelta del motore dipende dalla pressione di esercizio dell'impianto
The choice of the motor depends from plant working pressure

DN		Electric motor	D PN6	D PN16	D ANSI150	D ANSI300	H (~)	L	L2	L3	L4	L5	Weight (Kg)
15	1/2"	AOX–003	69	88	79	88	210	35	123	113	100	25	4
20	3/4"	AOX–003	79	98	89	108	215	42	123	113	100	25	4.5
25	1"	AOX–005	88	108	99	118	225	46	160	121	121	25	6.5
32	1"1/4	AOX–005	108	128	110	128	235	55	160	121	121	25	7.5
40	1"1/2	AOX–008	118	138	120	138	245	66	160	121	121	25	11
50	2"	AOX–008	128	148	153	158	250	72	160	121	121	25	12.5
65	2"1/2	AOX–015	148	168	168	178	270	98	189	129	145	25	20
80	3"	AOX–015	178	188	190	198	285	120	189	129	145	25	25
100	4"	AOX–030	200	220	220	230	350	140	268	164	200	25	44
125	5"	AOX–040	230	250	250	260	360	177	268	164	200	25	62
150	6"	AOX–060	280	280	280	300	380	210	268	164	200	25	84

Combinazione materiali standard – Standard materials Combination					
		A/316	316/316	B/316	B/B (Max ND4")
ITEM	DENOMINAZIONE DENOMINATION	MATERIALE MATERIAL	MATERIALE MATERIAL	MATERIALE MATERIAL	MATERIALE MATERIAL
01	Body	Forged steel ASTM A105N	Stainless steel AISI316 UNI EN10088	Bronze UNI EN1982 G–CuSn5Zn5Pb5	Bronze UNI EN1982 G–CuSn5Zn5Pb5
02	Lateral	Forged steel ASTM A105N	Stainless steel AISI316 UNI EN10088	Bronze UNI EN1982 G–CuSn5Zn5Pb5	Bronze UNI EN1982 G–CuSn5Zn5Pb5
03	Stem	Stainless steel AISI316 UNI EN10088	Stainless steel AISI316 UNI EN10088	Stainless steel AISI316 UNI EN10088	Aluminum Bronze (ND≤2") Bronze UNI EN1982 (ND2"1/2 to 4")
04	Ball	Stainless steel AISI316/304 UNI EN10088	Stainless steel AISI316 UNI EN10088	Stainless steel AISI316 UNI EN10088	Bronze UNI EN1982 G–CuSn5Zn5Pb5
05	Seat	PTFE/RPTFE	PTFE/RPTFE	PTFE/RPTFE	PTFE/RPTFE
06	Nuts	Galvanized Steel 8.8 EN20898–1	Galvanized Steel 8.8 EN20898–1	Galvanized Steel 8.8 EN20898–1	Galvanized Steel 8.8 EN20898–1
07	Socket springs	Galvanized Steel	Galvanized Steel	Galvanized Steel	Galvanized Steel
08	Stem seals	RPTFE	RPTFE	RPTFE	RPTFE

Nota: Combinazioni materiali non standard a richiesta
Note: Non standard materials combinations on request

Valvole a sfera tipo wafer flangiate PN6-10DIN-16-ANSI150-ANSI300 con motore elettrico

Ball valves wafer type NP6-10DIN-16-ANSI150-ANSI300 with electric motor

Tab.201
ME/PS

Conform to:
BS 5351 / ISO17292

DETAIL - DETTAGLIO "A"

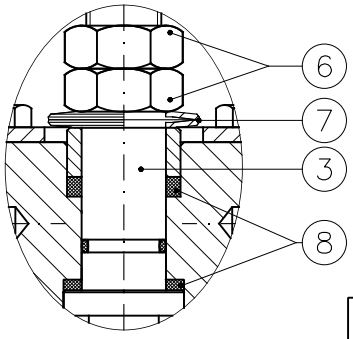

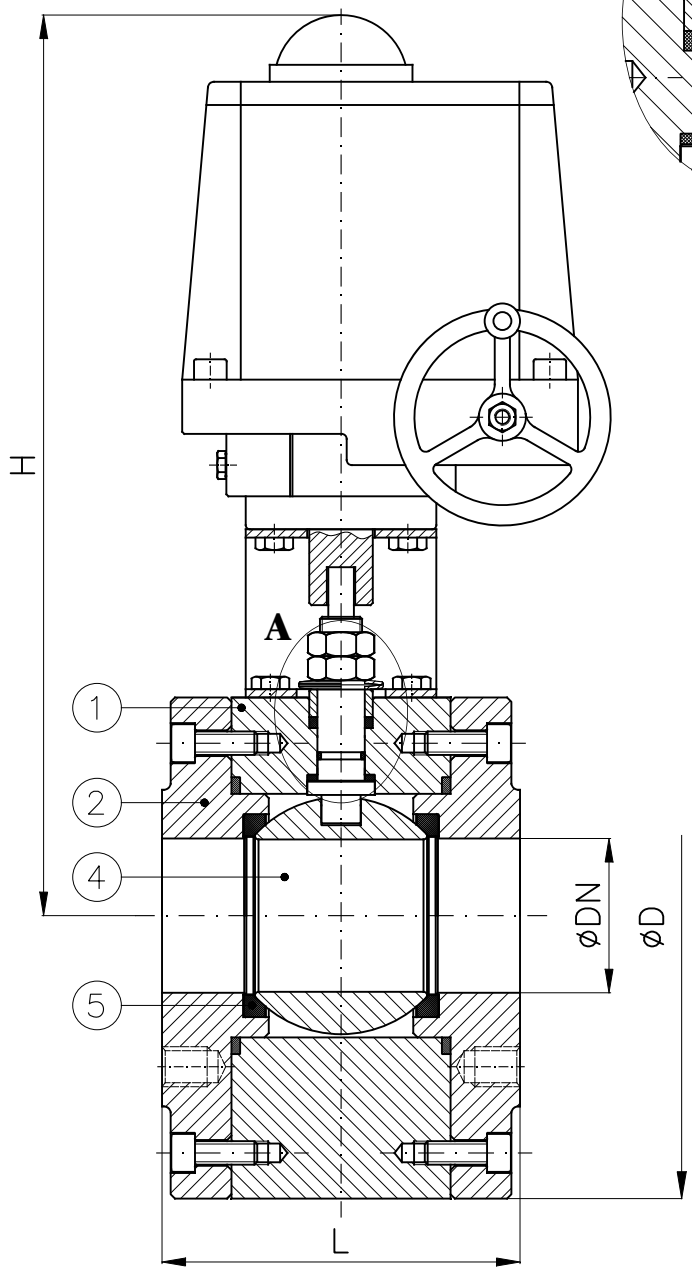

Classe di protezione : IP67 o IP68
Safety class : IP67 or IP68

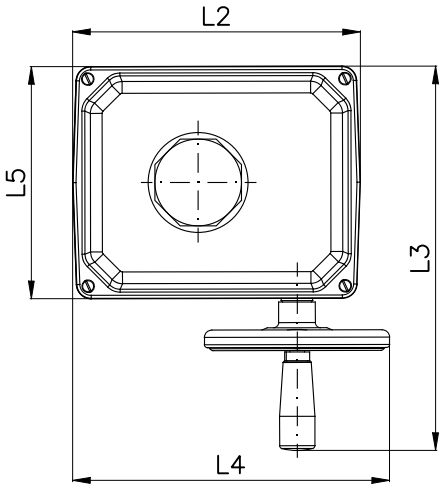

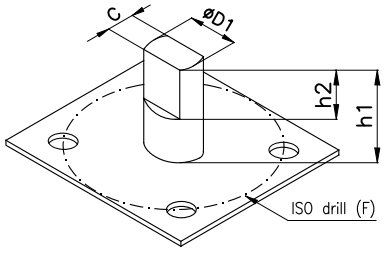

DN		D1xC	h1 (PN6)	h1 (PN16)	h2	ISO–F
15	1/2"	10x5.5	19	19	7	4xM5 ø35
20	3/4"	12x7.5	25	21	10	F04
25	1"	12x7.5	25	21	10	F04
32	1"1/4	14x9	34	33	10	F05
40	1"1/2	14x9	33	33	10	F05
50	2"	14x9	33	33	10	F05
65	2"1/2	22x14	62	55	13	F07
80	3"	22x14	51	50	13	F07
100	4"	30x18	65	61	13	F07

DN		Electric motor	D PN6	D PN16	D ANSI150	D ANSI300	H (~)	L	L2	L3	L4	L5	Weight (Kg)
15	1/2"	PSQ–E100	69	88	79	88	365	35	174	251	206	158	8
20	3/4"	PSQ–E100	79	98	89	108	370	42	174	251	206	158	9
25	1"	PSQ–E100	88	108	99	118	375	46	174	251	206	158	10
32	1"1/4	PSQ–E100	108	128	110	128	385	55	174	251	206	158	11
40	1"1/2	PSQ–E100	118	138	120	138	390	66	174	251	206	158	13
50	2"	PSQ–E100	128	148	153	158	395	72	174	251	206	158	15
65	2"1/2	PSQ103	148	168	168	178	405	98	196	263	216	158	22
80	3"	PSQ203	178	188	190	198	510	120	227	305	277	186	27
100	4"	PSQ503	200	220	220	230	605	140	278	416	328	235	37

Combinazione materiali standard – Standard materials Combination			
		A/316	316/316
ITEM	DENOMINAZIONE DENOMINATION	MATERIALE MATERIAL	MATERIALE MATERIAL
01	Body	Forged steel ASTM A105N	Stainless steel AISI316 UNI EN10088
02	Lateral	Forged steel ASTM A105N	Stainless steel AISI316 UNI EN10088
03	Stem	Stainless steel AISI316 UNI EN10088	Stainless steel AISI316 UNI EN10088
04	Ball	Stainless steel AISI316/304 UNI EN10088	Stainless steel AISI316 UNI EN10088
05	Seat	PTFE/RPTFE	PTFE/RPTFE
06	Nuts	Galvanized Steel 8.8 EN20898–1	Galvanized Steel 8.8 EN20898–1
07	Socket springs	Galvanized Steel	Galvanized Steel
08	Stem seals	RPTFE	RPTFE

Nota: Combinazioni materiali non standard a richiesta
Note: Non standard materials combinations on request

Valvole a sfera tipo wafer flangiate PN6-10DIN-16-ANSI150-ANSI300 con motore elettrico

Ball valves wafer type NP6-10DIN-16-ANSI150-ANSI300 with electric motor

Tab.201
ME/CHQ

Conform to:
BS 5351 / ISO17292

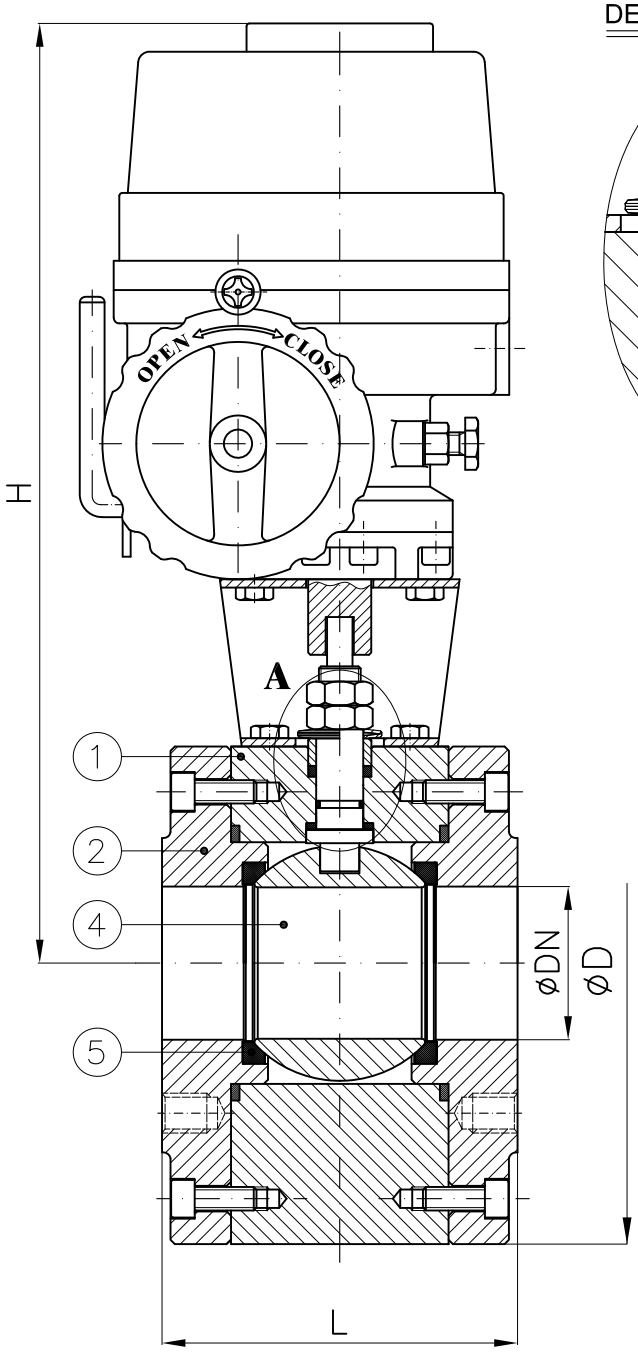

DETAIL - DETTAGLIO "A"

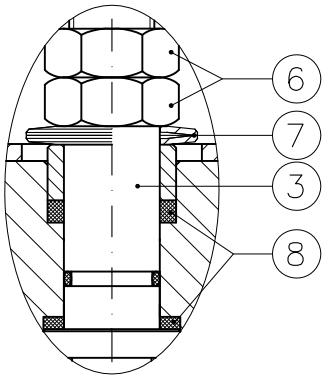

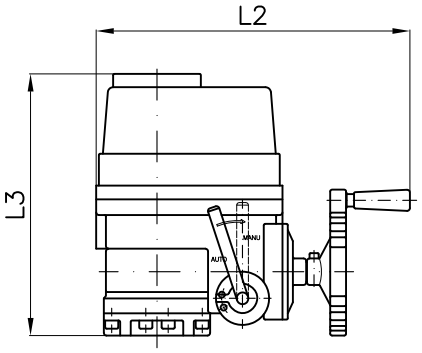

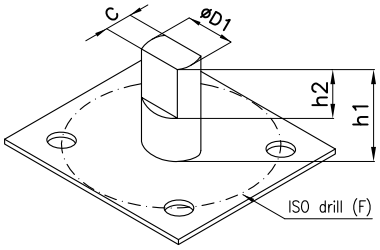

DN		D1xC	h1 (PN6)	h1 (PN16)	h2	ISO–F
15	1/2"	10x5.5	19	19	7	4xM5 ø35
20	3/4"	12x7.5	25	21	10	F04
25	1"	12x7.5	25	21	10	F04
32	1"1/4	14x9	34	33	10	F05
40	1"1/2	14x9	33	33	10	F05
50	2"	14x9	33	33	10	F05
65	2"1/2	22x14	62	55	13	F07
80	3"	22x14	51	50	13	F07
100	4"	30x18	65	61	13	F07

DN		Electric motor	D PN6	D PN16	D ANSI150	D ANSI300	H (~)	L	L2	L3	Weight (Kg)
15	1/2"	005	69	88	79	88	330	35	270	233.5	10
20	3/4"	005	79	98	89	108	335	42	270	233.5	10.5
25	1"	005	88	108	99	118	340	46	270	233.5	11
32	1"1/4	005	108	128	110	128	350	55	270	233.5	12
40	1"1/2	008	118	138	120	138	355	66	270	233.5	14
50	2"	008	128	148	153	158	360	72	270	233.5	15.5
65	2"1/2	015	148	168	168	178	415	98	351	270	33
80	3"	020	178	188	190	198	425	120	351	270	37.5
100	4"	030	200	220	220	230	480	140	358	290	53

Combinazione materiali standard – Standard materials Combination					
		A/316	316/316	B/316	B/B
ITEM	DENOMINAZIONE DENOMINATION	MATERIALE MATERIAL	MATERIALE MATERIAL	MATERIALE MATERIAL	MATERIALE MATERIAL
01	Body	Forged steel ASTM A105N	Stainless steel AISI316 UNI EN10088	Bronze UNI EN1982 G–CuSn5Zn5Pb5	Bronze UNI EN1982 G–CuSn5Zn5Pb5
02	Lateral	Forged steel ASTM A105N	Stainless steel AISI316 UNI EN10088	Bronze UNI EN1982 G–CuSn5Zn5Pb5	Bronze UNI EN1982 G–CuSn5Zn5Pb5
03	Stem	Stainless steel AISI316 UNI EN10088	Stainless steel AISI316 UNI EN10088	Stainless steel AISI316 UNI EN10088	Aluminum Bronze (ND≤2") Bronze UNI EN1982 (ND2"1/2 to 4")
04	Ball	Stainless steel AISI316/304 UNI EN10088	Stainless steel AISI316 UNI EN10088	Stainless steel AISI316 UNI EN10088	Bronze UNI EN1982 G–CuSn5Zn5Pb5
05	Seat	PTFE/RPTFE	PTFE/RPTFE	PTFE/RPTFE	PTFE/RPTFE
06	Nuts	Galvanized Steel 8.8 EN20898–1	Galvanized Steel 8.8 EN20898–1	Galvanized Steel 8.8 EN20898–1	Galvanized Steel 8.8 EN20898–1
07	Socket springs	Galvanized Steel	Galvanized Steel	Galvanized Steel	Galvanized Steel
08	Stem seals	RPTFE	RPTFE	RPTFE	RPTFE

Nota: Combinazioni materiali non standard a richiesta
Note: Non standard materials combinations on request

Valvole a sfera tipo wafer flangiate PN6-10DIN-16-ANSI150-ANSI300 con motore elettrico

Ball valves wafer type NP6-10DIN-16-ANSI150-ANSI300 with electric motor

Tab.201
ME/VAL

Conform to:
BS 5351 / ISO17292

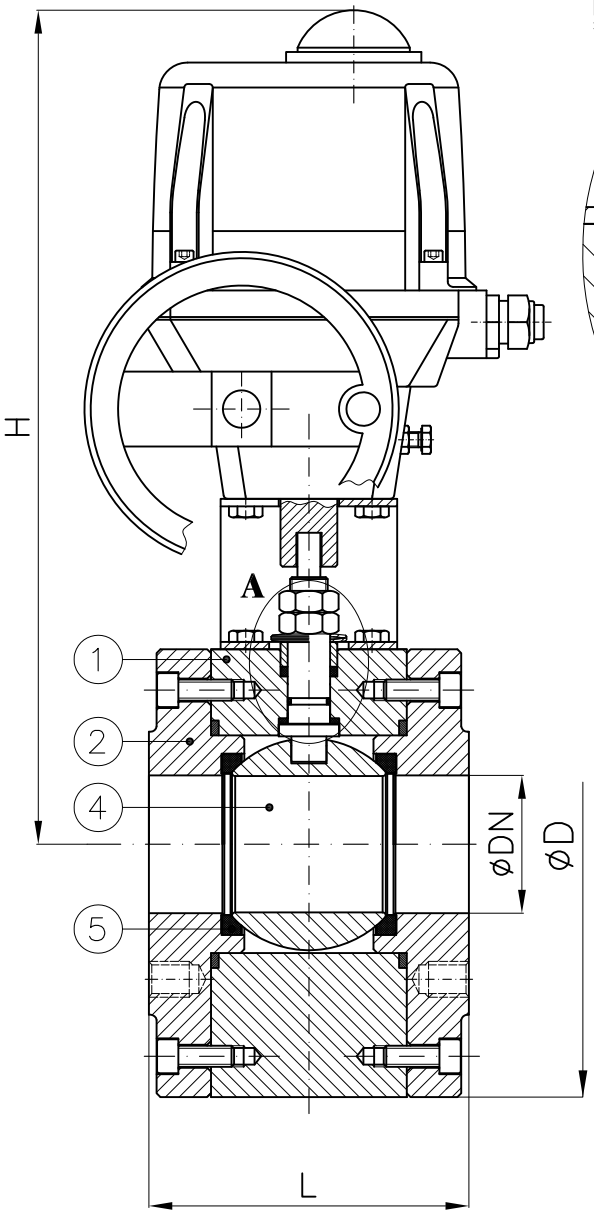

DETAIL - DETTAGLIO "A"

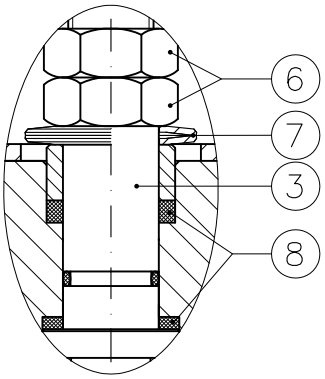

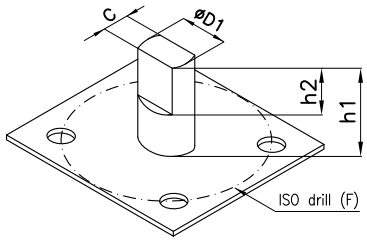

DN		D1xC	h1 (PN6)	h1 (PN16)	h2	ISO–F
15	1/2"	10x5.5	19	19	7	4xM5 ø35
20	3/4"	12x7.5	25	21	10	F04
25	1"	12x7.5	25	21	10	F04
32	1"1/4	14x9	34	33	10	F05
40	1"1/2	14x9	33	33	10	F05
50	2"	14x9	33	33	10	F05
65	2"1/2	22x14	62	55	13	F07
80	3"	22x14	51	50	13	F07
100	4"	30x18	65	61	13	F07

DN		Electric motor	D PN6	D PN16	D ANSI150	D ANSI300	H (~)	L	Weight (Kg)
15	1/2"	VR25	69	88	79	88	295	35	5
20	3/4"	VR25	79	98	89	108	300	42	6.5
25	1"	VR45	88	108	99	118	305	46	7.5
32	1"1/4	VR75	108	128	110	128	315	55	8.5
40	1"1/2	VR75	118	138	120	138	325	66	11
50	2"	VR75	128	148	153	158	330	72	12.5
65	2"1/2	VS150	148	168	168	178	400	98	20.5
80	3"	VS150	178	188	190	198	410	120	25
100	4"	VS300	200	220	220	230	445	140	35

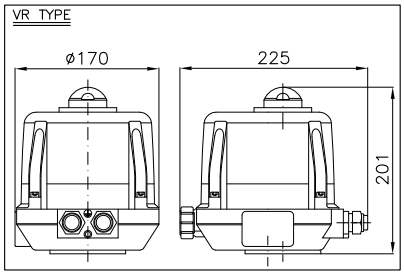

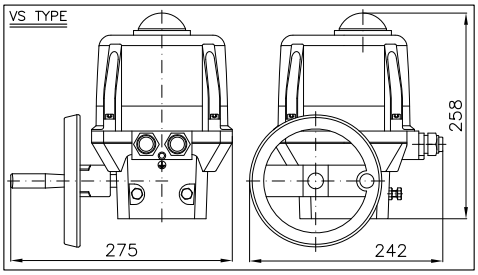

Combinazione materiali standard – Standard materials Combination					
		A/316	316/316	B/316	B/B
ITEM	DENOMINAZIONE DENOMINATION	MATERIALE MATERIAL	MATERIALE MATERIAL	MATERIALE MATERIAL	MATERIALE MATERIAL
01	Body	Forged steel ASTM A105N	Stainless steel AISI316 UNI EN10088	Bronze UNI EN1982 G–CuSn5Zn5Pb5	Bronze UNI EN1982 G–CuSn5Zn5Pb5
02	Lateral	Forged steel ASTM A105N	Stainless steel AISI316 UNI EN10088	Bronze UNI EN1982 G–CuSn5Zn5Pb5	Bronze UNI EN1982 G–CuSn5Zn5Pb5
03	Stem	Stainless steel AISI316 UNI EN10088	Stainless steel AISI316 UNI EN10088	Stainless steel AISI316 UNI EN10088	Aluminum Bronze (ND≤2") Bronze UNI EN1982 (ND2"1/2 to 4")
04	Ball	Stainless steel AISI316/304 UNI EN10088	Stainless steel AISI316 UNI EN10088	Stainless steel AISI316 UNI EN10088	Bronze UNI EN1982 G–CuSn5Zn5Pb5
05	Seat	PTFE/RPTFE	PTFE/RPTFE	PTFE/RPTFE	PTFE/RPTFE
06	Nuts	Galvanized Steel 8.8 EN20898–1	Galvanized Steel 8.8 EN20898–1	Galvanized Steel 8.8 EN20898–1	Galvanized Steel 8.8 EN20898–1
07	Socket springs	Galvanized Steel	Galvanized Steel	Galvanized Steel	Galvanized Steel
08	Stem seals	RPTFE	RPTFE	RPTFE	RPTFE

Nota: Combinazioni materiali non standard a richiesta
Note: Non standard materials combinations on request

Valvole a sfera tipo wafer PN6-10DIN-16-ANSI150-ANSI300 con attuatore pneumatico

Ball valves wafer type NP6-10DIN-16-ANSI150-ANSI300 with pneumatic actuator

Tab.201PN

Conform to:
BS 5351 / ISO17292

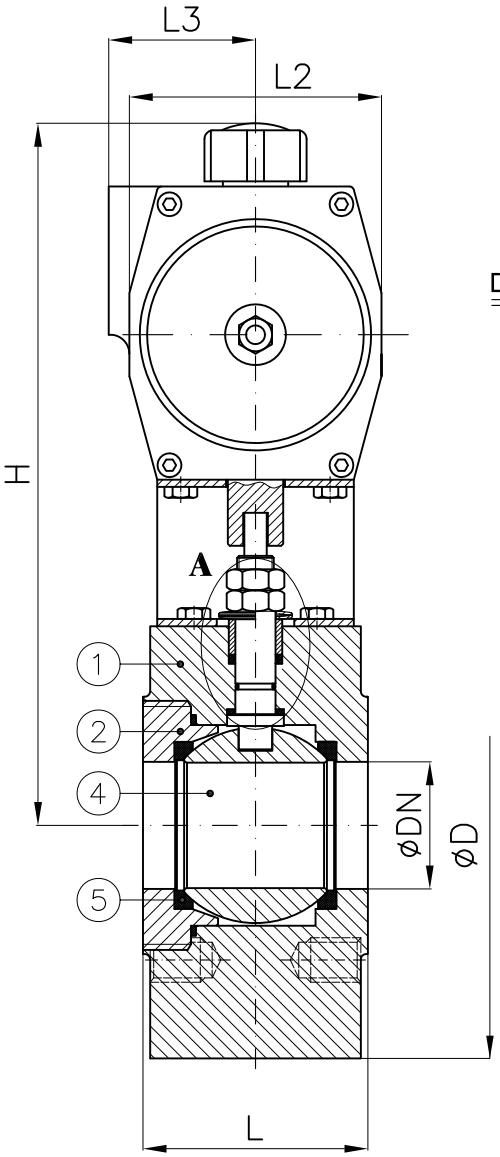

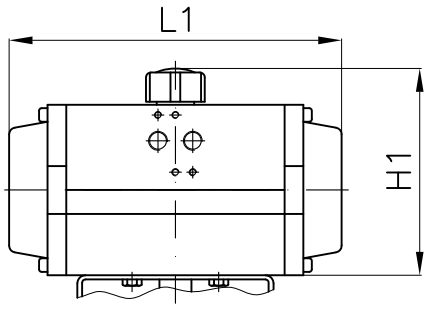

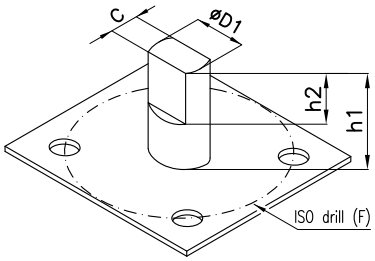

DETAIL - DETTAGLIO "A"

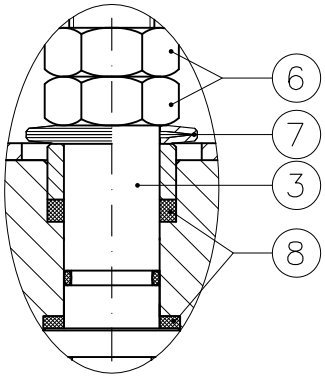

DN		D1xC	h1 (PN6)	h1 (PN16)	h2	ISO–F
15	1/2"	10x5.5	19	19	7	4xM5 ø35
20	3/4"	12x7.5	25	21	10	F04
25	1"	12x7.5	25	21	10	F04
32	1"1/4	14x9	34	33	10	F05
40	1"1/2	14x9	33	33	10	F05
50	2"	14x9	33	33	10	F05
65	2"1/2	22x14	62	55	13	F07
80	3"	22x14	51	50	13	F07
100	4"	30x18	65	61	13	F07
125	5"	30x18	64	64	24	F10
150	6"	30x18	64	64	20	F10

DA: DOUBLE ACTING
SR: SIMPLE ACTING (spring return)

DN		Pneumatic Actuator	H (~)	H1	L	L1	L2	L3	D PN6	D PN16	D ANSI150	D ANSI300	Weight (Kg)
15	1/2"	AP1 DA	185	92	35	142	60	41	69	88	79	88	2.5
		AP1 SR											
20	3/4"	AP2 DA	205	108	42	155	73	44.5	79	98	89	108	3.4
		AP2 SR											
25	1"	AP2 DA	210	108	46	155	73	44.5	88	108	99	118	4.1
		AP3 SR	230	125		213	85	49.5					5.2
32	1"1/4	AP3 DA	240	125	55	213	85	49.5	108	128	110	128	6.3
		AP3 SR											
40	1"1/2	AP3 DA	245	125	66	213	85	49.5	118	138	120	138	9
		AP3.5 SR	255	135		236	98	53					10.2
50	2"	AP3 DA	250	125	72	213	85	49.5	128	148	153	158	10.5
		AP3.5 SR	260	135		236	98	53					11.7
65	2"1/2	AP3.5 DA	275	135	98	236	98	53	148	168	168	178	18.7
		AP4 SR	290	150		276	110	58					20.1
80	3"	AP4 DA	305	150	120	276	110	58	178	188	190	198	25.1
		AP4.5 SR	330	177		310	128	69					28.3
100	4"	AP4.5 DA	365	177	140	310	128	69	200	220	220	230	38.3
		AP5 SR	375	190		366	140	–					40.1
125	5"	AP4.5 DA	375	177	177	310	128	69	230	250	250	260	55.3
		AP5.5 SR	410	211		388	160	–					61
150	6"	AP5 DA	405	190	210	366	140	–	280	280	280	300	79.1
		AP6 SR	450	235		468	175	–					88.7

Combinazione materiali standard – Standard materials Combination					
		A/316	316/316	B/316	B/B (Max ND4")
ITEM	DENOMINAZIONE DENOMINATION	MATERIALE MATERIAL	MATERIALE MATERIAL	MATERIALE MATERIAL	MATERIALE MATERIAL
01	Body	Forged steel ASTM A105N	Stainless steel AISI316 UNI EN10088	Bronze UNI EN1982 G–CuSn5Zn5Pb5	Bronze UNI EN1982 G–CuSn5Zn5Pb5
02	Lateral	Forged steel ASTM A105N	Stainless steel AISI316 UNI EN10088	Bronze UNI EN1982 G–CuSn5Zn5Pb5	Bronze UNI EN1982 G–CuSn5Zn5Pb5
03	Stem	Stainless steel AISI316 UNI EN10088	Stainless steel AISI316 UNI EN10088	Stainless steel AISI316 UNI EN10088	Aluminum Bronze (ND≤2") Bronze UNI EN1982 (ND2"1/2 to 4")
04	Ball	Stainless steel AISI316/304 UNI EN10088	Stainless steel AISI316 UNI EN10088	Stainless steel AISI316 UNI EN10088	Bronze UNI EN1982 G–CuSn5Zn5Pb5
05	Seat	PTFE/RPTFE	PTFE/RPTFE	PTFE/RPTFE	PTFE/RPTFE
06	Nuts	Galvanized Steel 8.8 EN20898–1	Galvanized Steel 8.8 EN20898–1	Galvanized Steel 8.8 EN20898–1	Galvanized Steel 8.8 EN20898–1
07	Socket springs	Galvanized Steel	Galvanized Steel	Galvanized Steel	Galvanized Steel
08	Stem seals	RPTFE	RPTFE	RPTFE	RPTFE

Nota: Combinazioni materiali non standard a richiesta
Note: Non standard materials combinations on request

Valvole a sfera tipo wafer PN16
Ball valves wafer type NP16

Art.01.000-Art.01.011

Conform to:
UNI EN1092

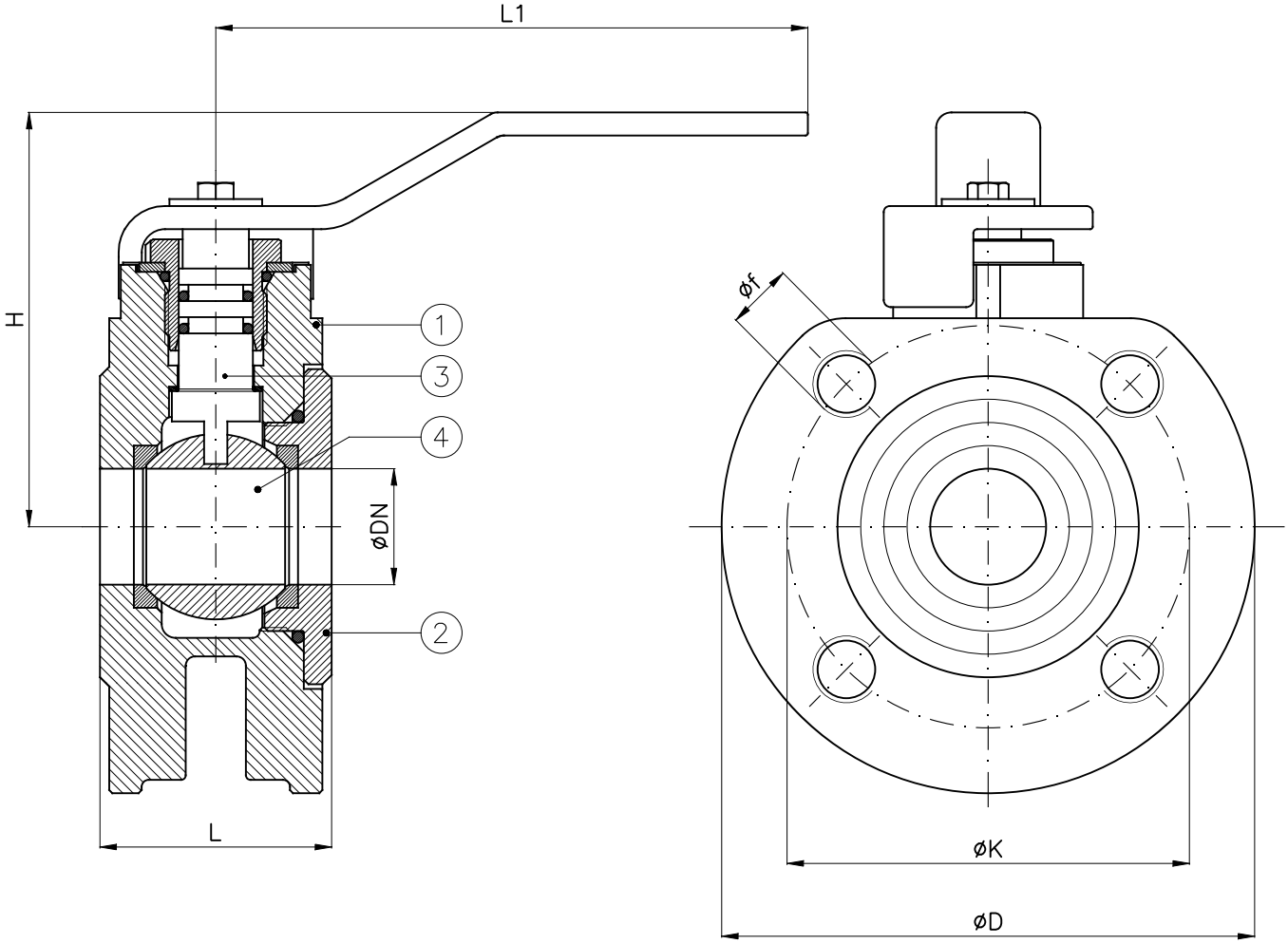

DN	H	L	L1	D	K	f	Holes NO. f	Weight (Kg)
20	85	40	130	105	75	M12	4	2
25	95	50	170	115	85	M12	4	2.6
32	100	55	170	140	100	M16	4	3.6
40	118	65	220	150	110	M16	4	5.5
50	125	80	220	165	125	M16	4	7
65	152	100	284	185	145	M16	4	11
80	166	120	284	200	160	M16	8	13
100	180	130	360	220	180	M16	8	19

		01.000	01.011
		G/O	G/304
ITEM	DENOMINAZIONE DENOMINATION	MATERIALE MATERIAL	MATERIALE MATERIAL
01	Body	Cast iron UNI EN1561 EN-GJL-250	Cast iron UNI EN1561 EN-GJL-250
02	Ring nut	Cast iron UNI EN1561 EN-GJL-250	Cast iron UNI EN1561 EN-GJL-250
03	Stem	Brass CW617N (OT58)	Stainless steel AISI304 UNI EN10088
04	Ball	Brass CW617N (OT58)	Stainless steel AISI304 UNI EN10088

Nota: Combinazioni materiali non standard a richiesta
Note: Non standard materials combinations on request

Conform to:

BS 5351 / ISO17292

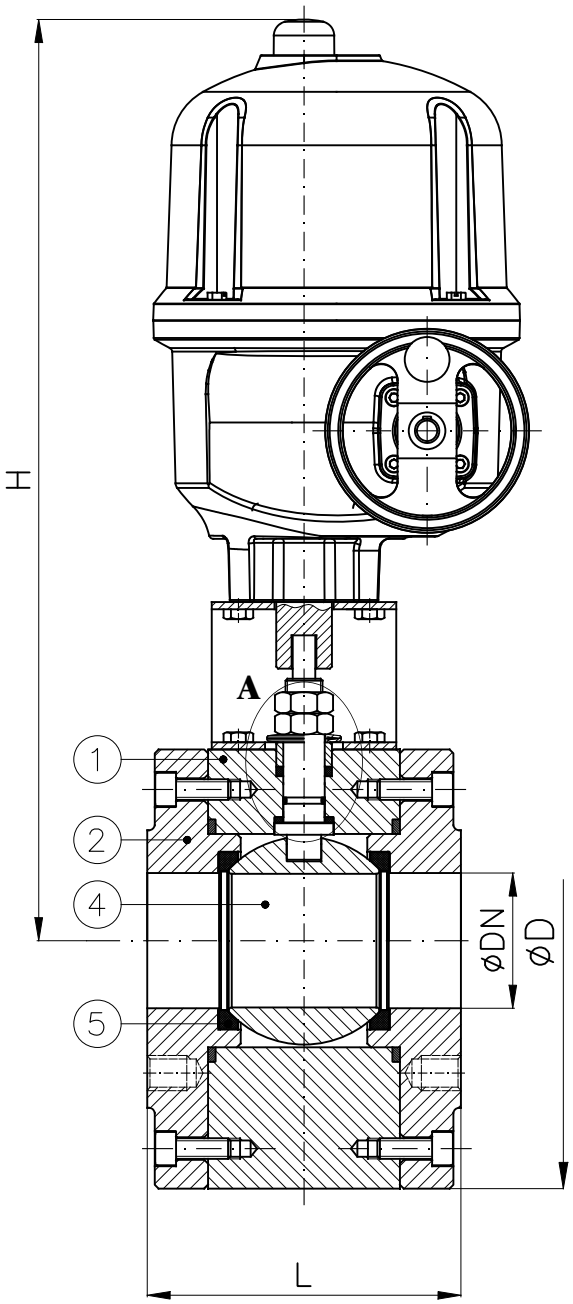

DETAIL - DETTAGLIO "A"

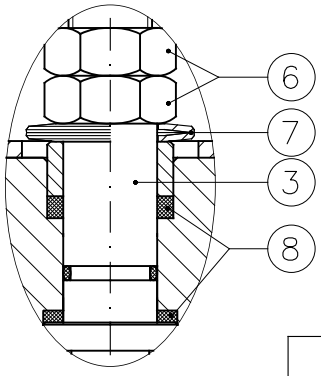

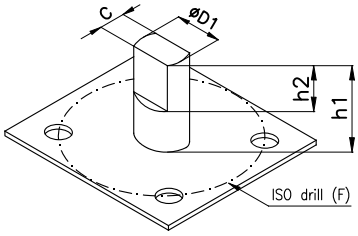

DN		D1xC	h1 (PN6)	h1 (PN16)	h2	ISO–F
15	1/2"	10x5.5	19	19	7	4xM5 Ø35
20	3/4"	12x7.5	25	21	10	F04
25	1"	12x7.5	25	21	10	F04
32	1"1/4	14x9	34	33	10	F05
40	1"1/2	14x9	33	33	10	F05
50	2"	14x9	33	33	10	F05
65	2"1/2	22x14	62	55	13	F07
80	3"	22x14	51	50	13	F07
100	4"	30x18	65	61	13	F07

DN		Electric motor	D PN6	D PN16	D ANSI150	D ANSI300	H (~)	L	Weight (Kg)
15	1/2"	AQ5	69	88	79	88	380	35	12
20	3/4"	AQ5	79	98	89	108	385	42	12.5
25	1"	AQ5	88	108	99	118	390	46	13
32	1"1/4	AQ5	108	128	110	128	400	55	14
40	1"1/2	AQ5	118	138	120	138	410	66	17.5
50	2"	AQ10	128	148	153	158	415	72	19
65	2"1/2	AQ15	148	168	168	178	425	98	26
80	3"	AQ15	178	188	190	198	440	120	31
100	4"	AQ25	200	220	220	230	505	140	44

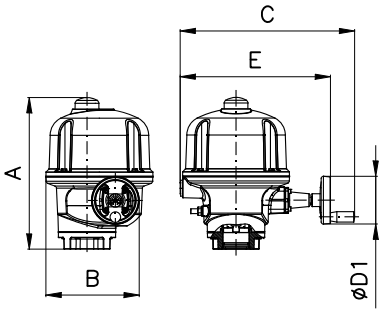

	A	B	C	E	ØD1
AQ5/10/15	286	184	276	225	100
AQ25	317	224	365	315	100

Combinazione materiali standard – Standard materials Combination					
		A/316	316/316	B/316	B/B
ITEM	DENOMINAZIONE DENOMINATION	MATERIALE MATERIAL	MATERIALE MATERIAL	MATERIALE MATERIAL	MATERIALE MATERIAL
01	Body	Forged steel ASTM A105N	Stainless steel AISI316 UNI EN10088	Bronze UNI EN1982 G–CuSn5Zn5Pb5	Bronze UNI EN1982 G–CuSn5Zn5Pb5
02	Lateral	Forged steel ASTM A105N	Stainless steel AISI316 UNI EN10088	Bronze UNI EN1982 G–CuSn5Zn5Pb5	Bronze UNI EN1982 G–CuSn5Zn5Pb5
03	Stem	Stainless steel AISI316 UNI EN10088	Stainless steel AISI316 UNI EN10088	Stainless steel AISI316 UNI EN10088	Aluminum Bronze (ND≤2") Bronze UNI EN1982 (ND2"1/2 to 4")
04	Ball	Stainless steel AISI316/304 UNI EN10088	Stainless steel AISI316 UNI EN10088	Stainless steel AISI316 UNI EN10088	Bronze UNI EN1982 G–CuSn5Zn5Pb5
05	Seat	PTFE/RPTFE	PTFE/RPTFE	PTFE/RPTFE	PTFE/RPTFE
06	Nuts	Galvanized Steel 8.8 EN20898–1	Galvanized Steel 8.8 EN20898–1	Galvanized Steel 8.8 EN20898–1	Galvanized Steel 8.8 EN20898–1
07	Socket springs	Galvanized Steel	Galvanized Steel	Galvanized Steel	Galvanized Steel
08	Stem seals	RPTFE	RPTFE	RPTFE	RPTFE

Nota: Combinazioni materiali non standard a richiesta
Note: Non standard materials combinations on request

Valvole a sfera tipo wafer flangiate PN10-16-25-40-ANSI150
Flanged Ball valves wafer type NP10-16-25-40-ANSI150

Tab.201C

Conform to:

ASME B16.34
EN12516
EN1092
ISO14313

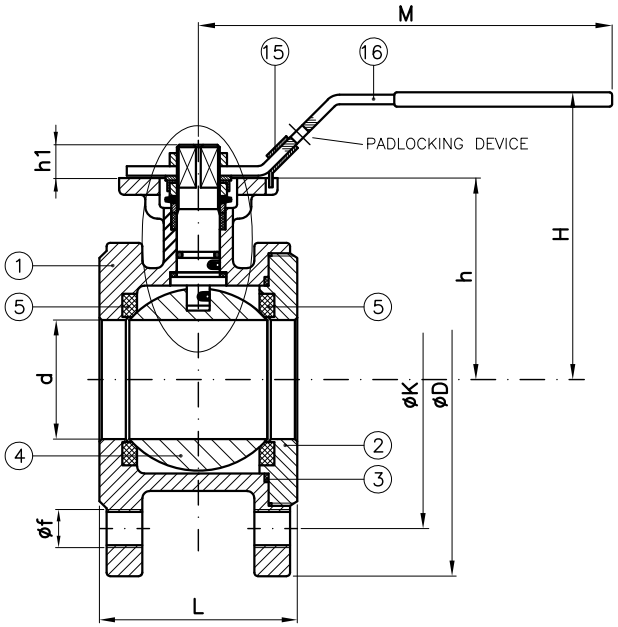

DN 15 - 100

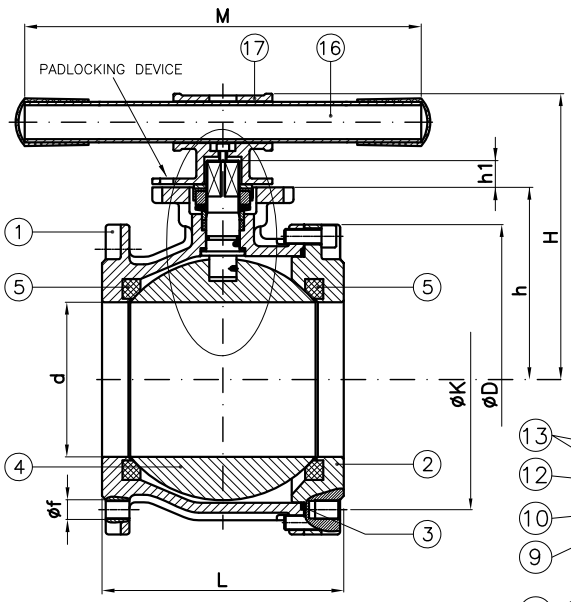

DN 125 - 150

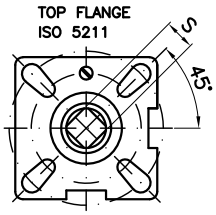

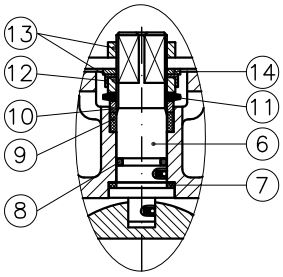

*DN65 PN16 può essere fornita con n°4 fori (øf) – ND65 PN16 can be supplied with 4 holes (øf)

DN		d	D PN10/16	D PN25	D PN40	D ANSI150	K PN10/16	K PN25	K PN40	K ANSI150	f PN10/16	f PN25	f PN40	f ANSI150	Holes N° f PN10/16	Holes N° f PN25	Holes N° f PN40	Holes N° f ANSI150
15	1/2"	15	95	95	95	88.9	65	65	65	60	M12	M12	M12	1/2"	4	4	4	4
20	3/4"	20	105	105	105	98.4	75	75	75	70	M12	M12	M12	1/2"	4	4	4	4
25	1"	25	115	115	115	108	85	85	85	79	M12	M12	M12	1/2"	4	4	4	4
32	1"1/4	32	140	140	140	118	100	100	100	89	M16	M16	M16	1/2"	4	4	4	4
40	1"1/2	40	150	150	150	127	110	110	110	98	M16	M16	M16	1/2"	4	4	4	4
50	2"	50	165	165	165	152	125	125	125	121	M16	M16	M16	5/8"	4	4	4	4
65	2"1/2	65	185	185	185	178	145	145	145	140	M16	M16	M16	5/8"	8*	8	8	4
80	3"	76	200	200	200	190	160	160	160	152	M16	M16	M16	5/8"	8	8	8	4
100	4"	94	220	235	235	229	180	190	190	191	M16	M20	M20	5/8"	8	8	8	8
125	5"	125	250	270	270	254	210	220	220	216	M16	M24	M24	3/4"UNC	8	8	8	8
150	6"	150	285	300	300	279	240	250	250	241	M20	M24	M24	3/4"UNC	8	8	8	8
200	8"	200	340	360	375	343	295	310	320	298	M20	M24	M27	3/4"UNC	8 PN10 12 PN16	12	12	8

DN		L	H (~)	h (~)	h1 (~)	M	Top Flange	S	Weight (Kg)
15	1/2"	35	90	56	9.5	117	F03/F04	9	1.2
20	3/4"	39	95	60	9.5	117	F03/F04	9	1.55
25	1"	44	90	62	11.5	165	F04/F05	11	1.95
32	1"1/4	52	100	71	11.5	165	F04/F05	11	3.1
40	1"1/2	64	105	76.5	15	203	F05/F07	14	4.05
50	2"	83	125	85	15	203	F05/F07	14	5.85
65	2"1/2	105	160	96	18	255	F07/F10	17	10.3
80	3"	121	170	112	18	255	F07/F10	17	13.8
100	4"	152	195	124	18	302	F07/F10	17	22.9
125	5"	196	260	160	23	600	F10/F12	22	43.5
150	6"	236	280	175	23	600	F10/F12	22	61.4
200	8"	315	340	205	28	800	F12/F14	27	117

Combinazione materiali standard – Standard materials Combination

		A/304	CF8M/316
ITEM	DENOMINAZIONE DENOMINATION	MATERIALE MATERIAL	MATERIALE MATERIAL
01	Body	WCB+ENP	CF8M
02	Lateral	WCB+ENP	CF8M
03	Body gasket	PTFE	PTFE
04	Ball	SS304	SS316
05	Seat	R–PTFE	R–PTFE
06	Stem	SS304	SS316
07	Thrust washer	PTFE	PTFE
08	O–ring	VITON	VITON
09	Stem packing	PTFE	PTFE
10	Stem ring	SS304	SS316
11	Belleville spring	SS301	SS301
12	Nut stopper	SS304	SS304
13	Nut	SS304	SS304
14	Plate washer	SS304	SS304
15	Lock device	SS304	SS304
16	Hand lever	SS304	SS304
17	Handle body	CF8	CF8

Valvole a sfera tipo wafer flangiate PN10-16-25-40-ANSI150 con motore elettrico

Flanged Ball valves wafer type NP10-16-25-40-ANSI150 with electric motor

Tab.201C
ME/AOX

Conform to:

ASME B16.34
EN12516
EN1092
ISO14313

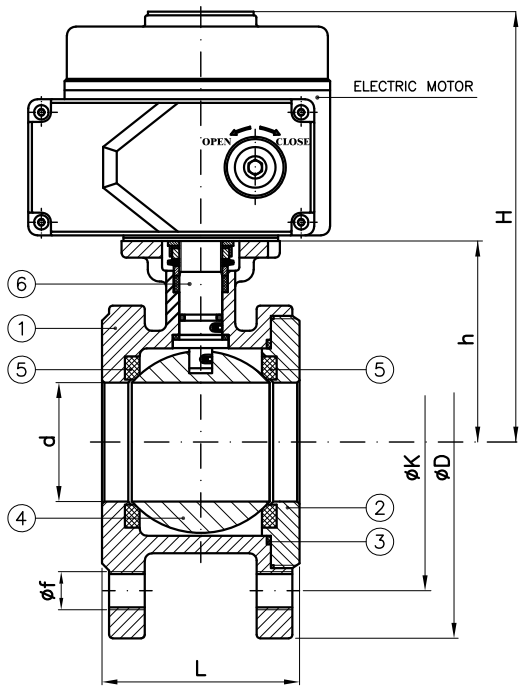

DN 15 - 100

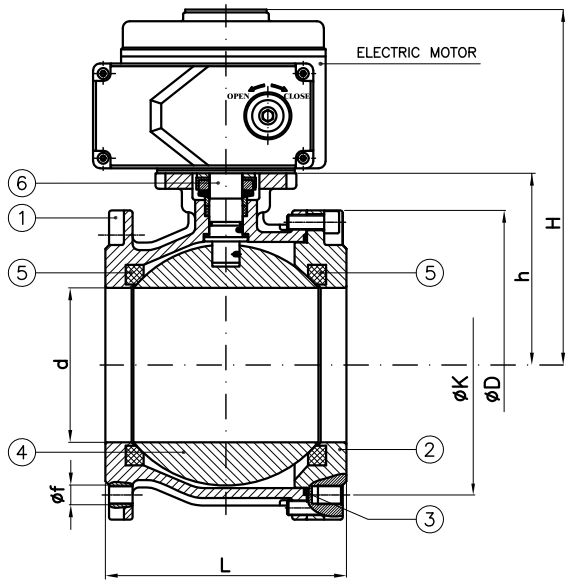

DN 125 - 150

TOP FLANGE
ISO 5211

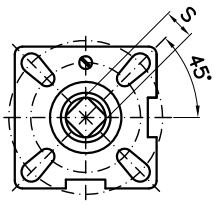

*DN65 PN16 può essere fornita con n°4 fori (øf) – ND65 PN16 can be supplied with 4 holes (øf)

DN		d	D PN10/16	D PN25	D PN40	D ANSI150	K PN10/16	K PN25	K PN40	K ANSI150	f PN10/16	f PN25	f PN40	f ANSI150	Holes N° f PN10/16	Holes N° f PN25	Holes N° f PN40	Holes N° f ANSI150
15	1/2"	15	95	95	95	88.9	65	65	65	60	M12	M12	M12	1/2"	4	4	4	4
20	3/4"	20	105	105	105	98.4	75	75	75	70	M12	M12	M12	1/2"	4	4	4	4
25	1"	25	115	115	115	108	85	85	85	79	M12	M12	M12	1/2"	4	4	4	4
32	1"1/4	32	140	140	140	118	100	100	100	89	M16	M16	M16	1/2"	4	4	4	4
40	1"1/2	40	150	150	150	127	110	110	110	98	M16	M16	M16	1/2"	4	4	4	4
50	2"	50	165	165	165	152	125	125	125	121	M16	M16	M16	5/8"	4	4	4	4
65	2"1/2	65	185	185	185	178	145	145	145	140	M16	M16	M16	5/8"	8*	8	8	4
80	3"	76	200	200	200	190	160	160	160	152	M16	M16	M16	5/8"	8	8	8	4
100	4"	94	220	235	235	229	180	190	190	191	M16	M20	M20	5/8"	8	8	8	8
125	5"	125	250	270	270	254	210	220	220	216	M16	M24	M24	3/4"UNC	8	8	8	8
150	6"	150	285	300	300	279	240	250	250	241	M20	M24	M24	3/4"UNC	8	8	8	8
200	8"	200	340	360	375	343	295	310	320	298	M20	M24	M27	3/4"UNC	8 PN10 12 PN16	12	12	8

DN		L	H (~)	h (~)	Top Flange	S	Electric Motor	L2	L3	L4	L5
15	1/2"	35	175	56	F03/F04	9	AOX–003	123	113	100	25
20	3/4"	39	180	60	F03/F04	9	AOX–003	123	113	100	25
25	1"	44	180	62	F04/F05	11	AOX–003	123	113	100	25
32	1"1/4	52	195	71	F04/F05	11	AOX–005	160	121	121	25
40	1"1/2	64	200	76.5	F05/F07	14	AOX–005	160	121	121	25
50	2"	83	210	85	F05/F07	14	AOX–008	160	121	121	25
65	2"1/2	105	230	96	F07/F10	17	AOX–015	189	129	145	25
80	3"	121	245	112	F07/F10	17	AOX–015	189	129	145	25
100	4"	152	290	124	F07/F10	17	AOX–020	268	164	200	25
125	5"	196	330	160	F10/F12	22	AOX–030	268	164	200	25
150	6"	236	345	175	F10/F12	22	AOX–040	268	164	200	25
200	8"	315	375	205	F12/F14	27	AOX–060	268	164	200	25

Combinazione materiali standard – Standard materials Combination

ITEM	DENOMINAZIONE DENOMINATION	A/304 MATERIALE MATERIAL	CF8M/316 MATERIALE MATERIAL
01	Body	WCB+ENP	CF8M
02	Lateral	WCB+ENP	CF8M
03	Body gasket	PTFE	PTFE
04	Ball	SS304	SS316
05	Seat	R–PTFE	R–PTFE
06	Stem	SS304	SS316

ELECTRIC MOTOR

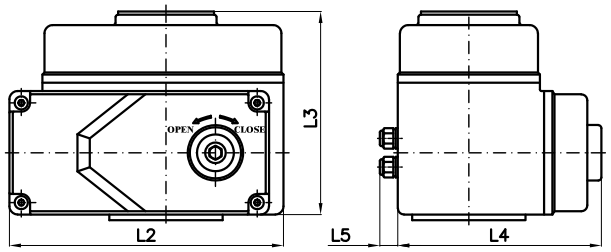

La scelta del motore dipende dalla pressione di esercizio dell'impianto
The choice of the motor depends from plant working pressure

www.medanaevisca.it

Valvole a sfera filettate a passaggio totale
Threaded ball valves full bore

Tab.202

Conform to:
ANSI B16.34
BS 5351 / ISO17292

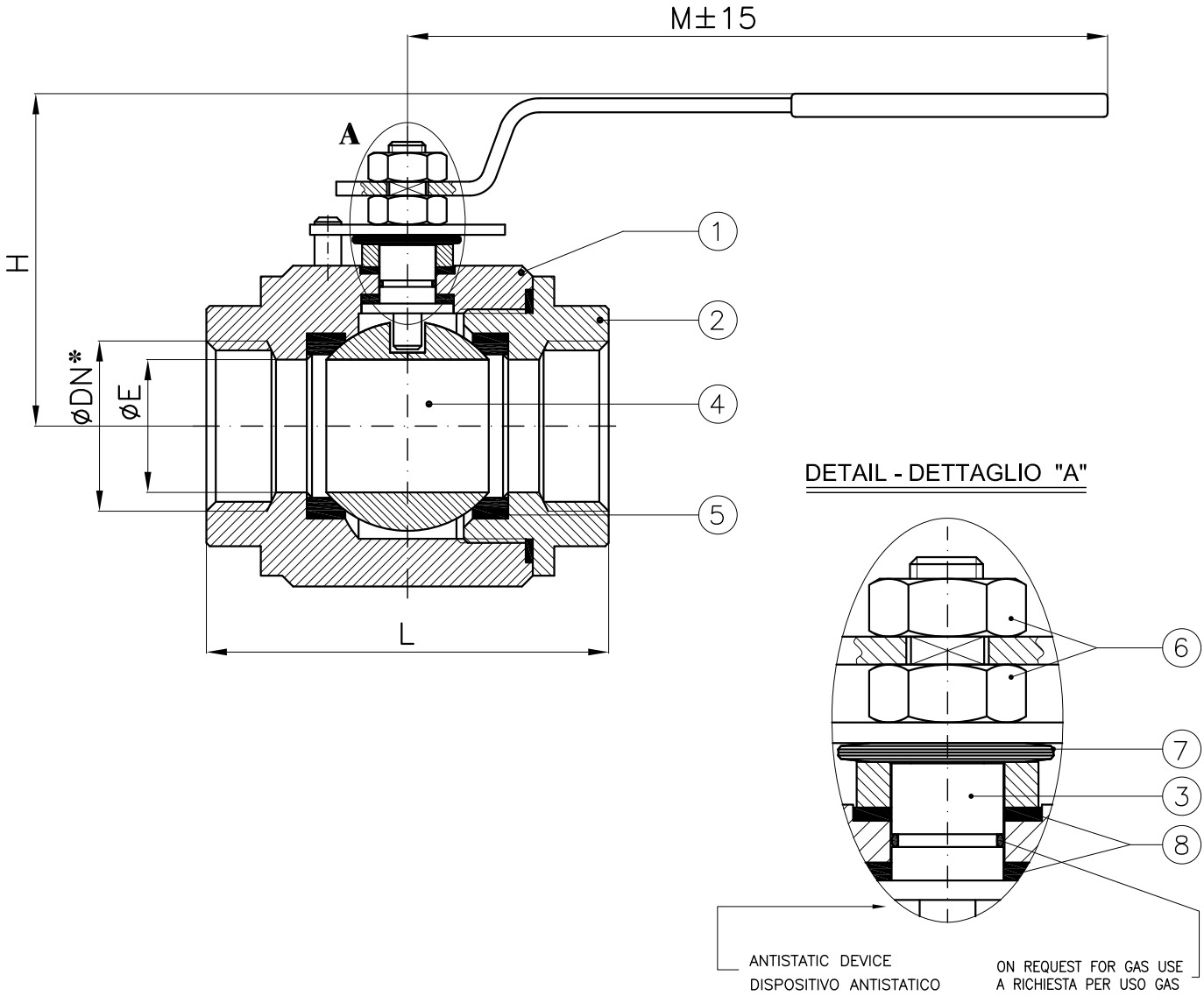

✻: Filettatura GAS
✻: *BSPP threaded*

DN		øE	H	L	M	Weight (Kg)
10	3/8"	11	65	65	130	0.6
15	1/2"	14	70	75	130	0.8
20	3/4"	19	85	90	180	1.5
25	1"	25	85	100	180	2.1
32	1"1/4	32	100	115	280	3
40	1"1/2	38	110	128	280	3.9
50	2"	48	115	150	280	6.8
65	2"1/2	65	145	195	355	13
80	3"	76	150	203	355	15.6
100	4"	95	165	230	410	28

Combinazione materiali standard – Standard materials Combination			
		A/316	316/316
ITEM	DENOMINAZIONE DENOMINATION	MATERIALE MATERIAL	MATERIALE MATERIAL
01	Body	Forged steel ASTM A105N	Stainless steel AISI316 UNI EN10088
02	Lateral	Forged steel ASTM A105N	Stainless steel AISI316 UNI EN10088
03	Stem	Stainless steel AISI316 UNI EN10088	Stainless steel AISI316 UNI EN10088
04	Ball	Stainless steel AISI316/304 UNI EN10088	Stainless steel AISI316 UNI EN10088
05	Seat	PTFE/RPTFE	PTFE/RPTFE
06	Nuts	Galvanized Steel 8.8 EN20898-1	Galvanized Steel 8.8 EN20898-1
07	Socket springs	Galvanized Steel	Galvanized Steel
08	Stem seals	RPTFE	RPTFE

Nota: Combinazioni materiali non standard a richiesta
Note: Non standard materials combinations on request

Conform to:
ANSI B16.34
BS 5351 / ISO17292

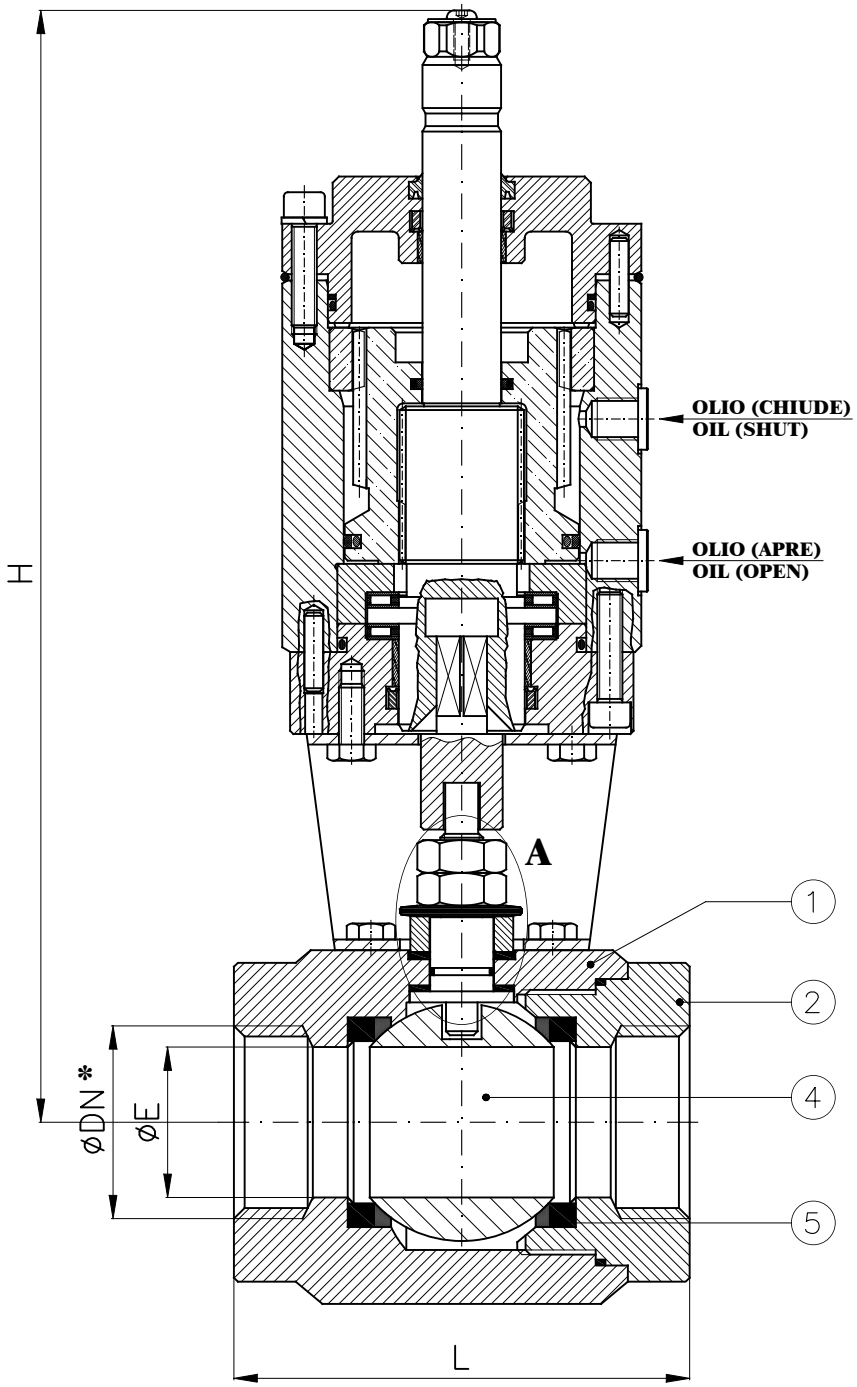

DETAIL - DETTAGLIO "A"

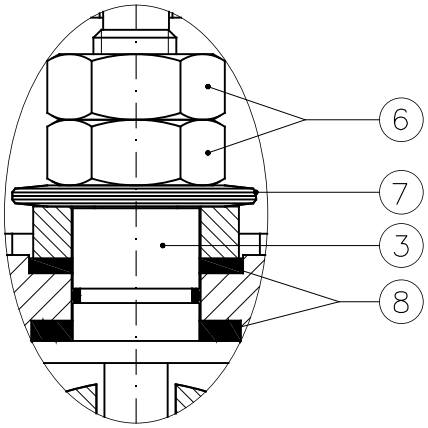

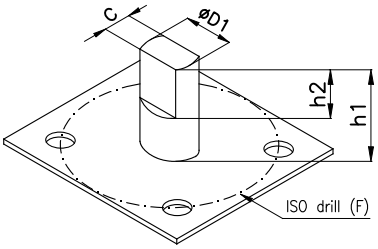

DN		D1xC	h1	h2	ISO–F
15	1/2"	10x5.5	23	10	F03
20	3/4"	12x7.5	29	11	F04
25	1"	12x7.5	28	12	F04
32	1"1/4	14x9	45	18	F05
40	1"1/2	14x9	44	19	F05
50	2"	14x9	46	17	F05

Attuatore rotante a doppio effetto

Le taglie degli attuatori devono essere verificate in funzione della pressione di esercizio della valvola e della pressione dell'olio del circuito idraulico.

Double acting rotary actuator

The size of the actuator must be checked on the strength of the working pressure of the valve and on the strength of the oil pressure inside the hydraulic circuit.

✻: Filettatura GAS
✻: *BSPP threaded*

DN		ØE	H	L	ATTUATORE ACTUATOR	Weight (Kg)
15	1/2"	14	235	75	ARL4 (RL.05)	4
20	3/4"	19	240	90	ARL4 (RL.05)	5
25	1"	25	245	100	ARL4 (RL.05)	6
32	1"1/4	32	310	115	ARL10 (RL.14)	12
40	1"1/2	38	315	128	ARL10 (RL.14)	12.5
50	2"	48	320	147	ARL10 (RL.14)	13

		A/316	316/316
ITEM	DENOMINAZIONE DENOMINATION	MATERIALE MATERIAL	MATERIALE MATERIAL
01	Body	Forged steel ASTM A105N	Stainless steel AISI316 UNI EN10088
02	Lateral	Forged steel ASTM A105N	Stainless steel AISI316 UNI EN10088
03	Stem	Stainless steel AISI316 UNI EN10088	Stainless steel AISI316 UNI EN10088
04	Ball	Stainless steel AISI316/304 UNI EN10088	Stainless steel AISI316 UNI EN10088
05	Seat	PTFE/RPTFE	PTFE/RPTFE
06	Nuts	Galvanized Steel 8.8 EN20898–1	Galvanized Steel 8.8 EN20898–1
07	Socket springs	Galvanized Steel	Galvanized Steel
08	Stem seals	RPTFE	RPTFE

Nota: Combinazioni materiali non standard a richiesta
Note: Non standard materials combinations on request

Valvole a sfera filettate tipo monoblocco con attuatore idraulico semplice effetto
End entry (monobloc) threaded ball valves with hydraulic single acting actuator

Tab.202
Hydr/SR

Conform to:
ANSI B16.34
BS 5351 / ISO17292

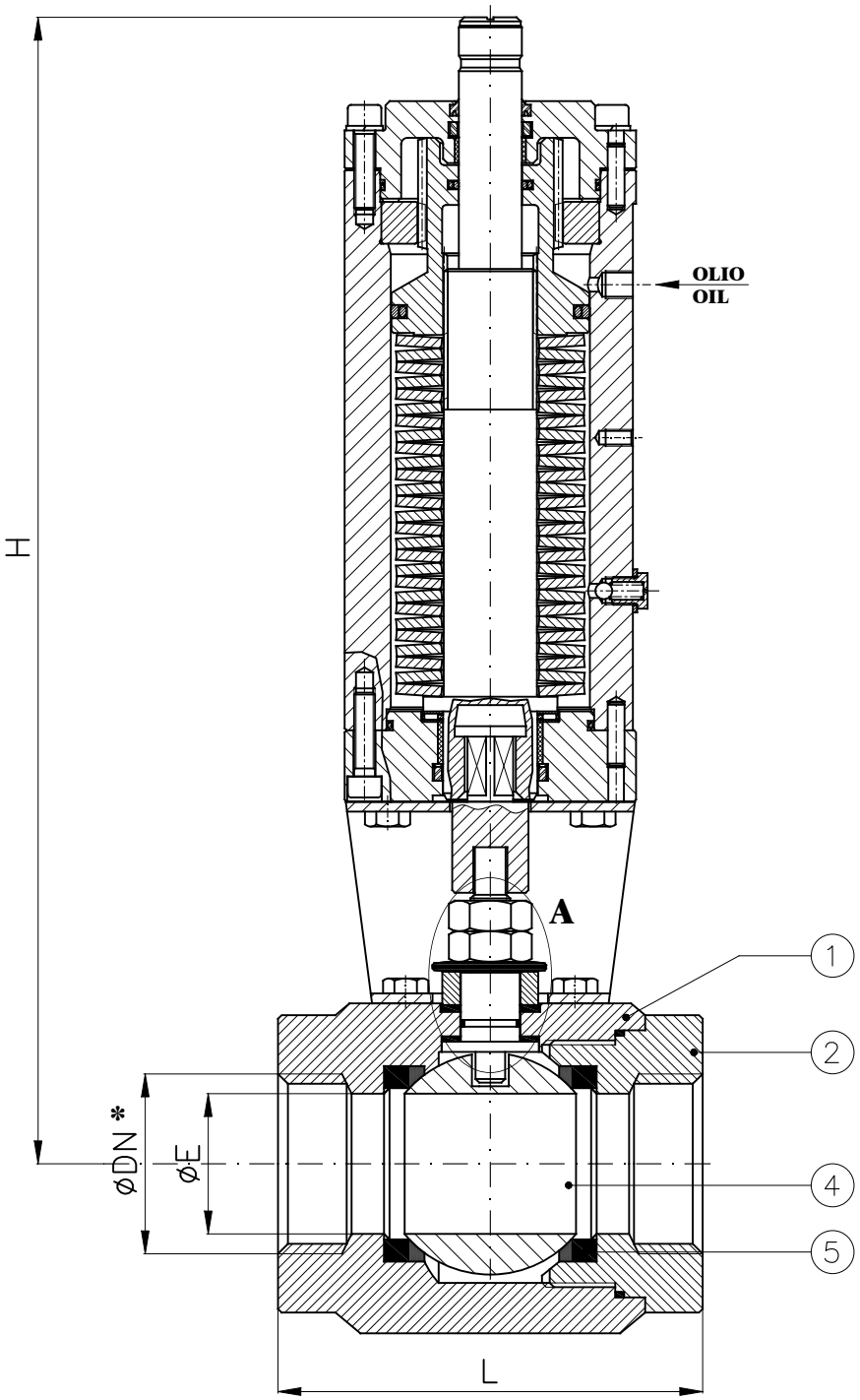

DETAIL - DETTAGLIO "A"

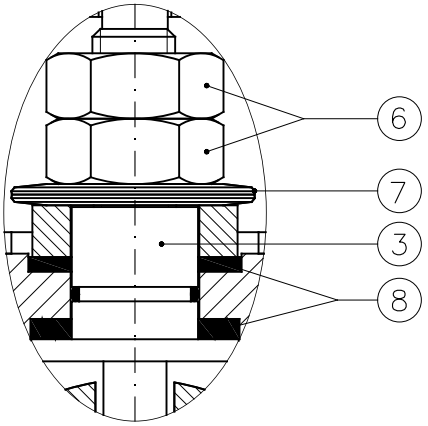

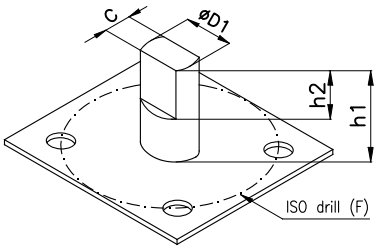

DN		D1xC	h1	h2	ISO–F
15	1/2"	10x5.5	23	10	F03
20	3/4"	12x7.5	29	11	F04
25	1"	12x7.5	28	12	F04
32	1"1/4	14x9	45	18	F05
40	1"1/2	14x9	44	19	F05
50	2"	14x9	46	17	F05

Attuatore rotante a singolo effetto con ritorno a molla

Le taglie degli attuatori devono essere verificate in funzione della pressione di esercizio della valvola e della pressione dell'olio del circuito idraulico.

Single acting rotary actuator (spring return)

The size of the actuator must be checked on the strength of the working pressure of the valve and on the strength of the oil pressure inside the hydraulic circuit.

✻: Filettatura GAS
✻: *BSPP threaded*

DN		ATTUATORE ACTUATOR	øE	H	L	Weight (Kg)
15	1/2"	H.927 (RS.10)	14	405	75	14.5
20	3/4"	H.927 (RS.10)	19	410	90	15.5
25	1"	H.927 (RS.10)	25	415	100	16.5
32	1"1/4	H.927 (RS.10)	32	420	115	18
40	1"1/2	H.927 (RS.10)	38	425	128	18.5
50	2"	H.927 (RS.10)	48	430	147	20

		A/316	316/316
ITEM	DENOMINAZIONE DENOMINATION	MATERIALE MATERIAL	MATERIALE MATERIAL
01	Body	Forged steel ASTM A105N	Stainless steel AISI316 UNI EN10088
02	Lateral	Forged steel ASTM A105N	Stainless steel AISI316 UNI EN10088
03	Stem	Stainless steel AISI316 UNI EN10088	Stainless steel AISI316 UNI EN10088
04	Ball	Stainless steel AISI316/304 UNI EN10088	Stainless steel AISI316 UNI EN10088
05	Seat	PTFE/RPTFE	PTFE/RPTFE
06	Nuts	Galvanized Steel 8.8 EN20898–1	Galvanized Steel 8.8 EN20898–1
07	Socket springs	Galvanized Steel	Galvanized Steel
08	Stem seals	RPTFE	RPTFE

Nota: Combinazioni materiali non standard a richiesta
Note: Non standard materials combinations on request

Valvole a sfera filettate tipo monoblocco con motore elettrico
End entry (monobloc) threaded ball valves with electric motor

Tab.202
ME/AOX

Conform to:
ANSI B16.34
BS 5351 / ISO17292

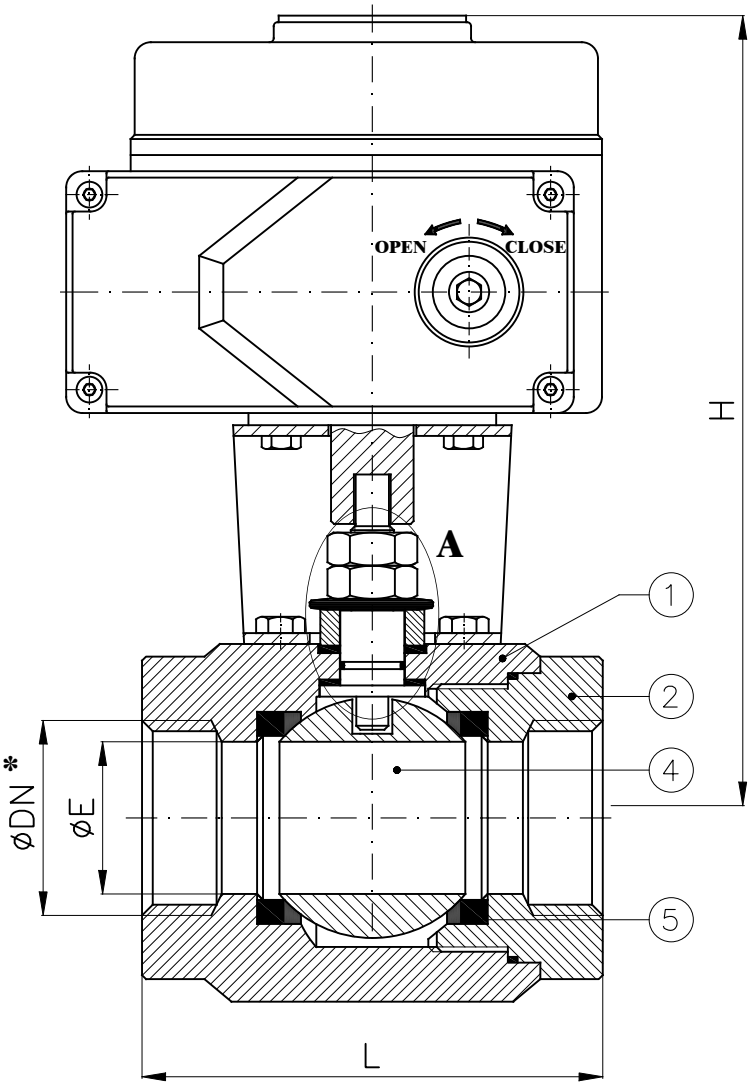

DETAIL - DETTAGLIO "A"

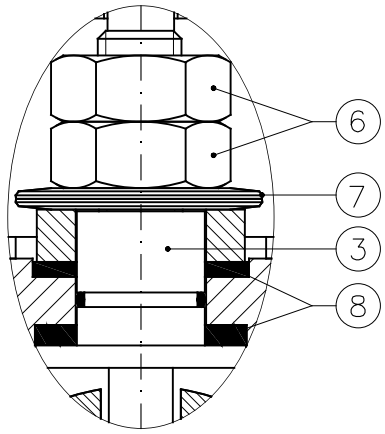

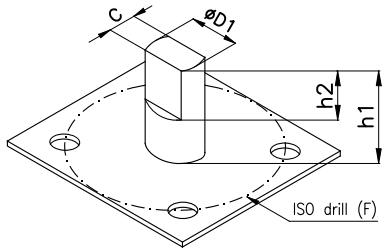

✻: Filettatura GAS
✻: *BSPP threaded*

DN		Electric motor	E	H (~)	L	L2	L3	L4	L5	Weight (Kg)
15	1/2"	AOX-003	14	200	75	123	113	100	25	3.5
20	3/4"	AOX-003	19	205	90	123	113	100	25	4.3
25	1"	AOX-005	25	220	100	160	121	121	25	7
32	1"1/4	AOX-005	32	225	115	160	121	121	25	8.5
40	1"1/2	AOX-008	38	230	128	160	121	121	25	9
50	2"	AOX-008	48	235	147	160	121	121	25	10.5

DN		D1xC	h1	h2	ISO-F
15	1/2"	10x5.5	23	10	F03
20	3/4"	12x7.5	29	11	F04
25	1"	12x7.5	28	12	F04
32	1"1/4	14x9	45	18	F05
40	1"1/2	14x9	44	19	F05
50	2"	14x9	46	17	F05

ELECTRIC MOTOR

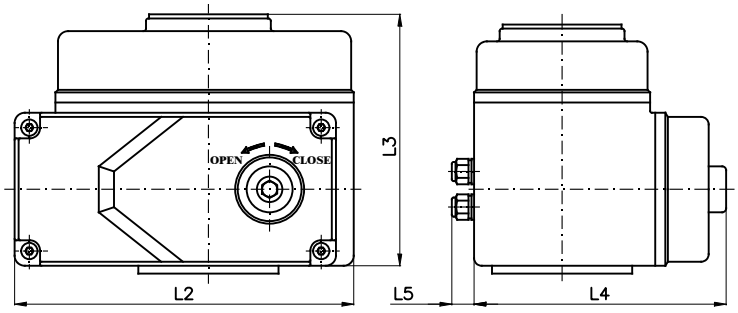

La scelta del motore dipende dalla pressione di esercizio dell'impianto
The choice of the motor depends from plant working pressure

Combinazione materiali standard – Standard materials Combination			
		A/316	316/316
ITEM	DENOMINAZIONE DENOMINATION	MATERIALE MATERIAL	MATERIALE MATERIAL
01	Body	Forged steel ASTM A105N	Stainless steel AISI316 UNI EN10088
02	Lateral	Forged steel ASTM A105N	Stainless steel AISI316 UNI EN10088
03	Stem	Stainless steel AISI316 UNI EN10088	Stainless steel AISI316 UNI EN10088
04	Ball	Stainless steel AISI316/304 UNI EN10088	Stainless steel AISI316 UNI EN10088
05	Seat	PTFE/RPTFE	PTFE/RPTFE
06	Nuts	Galvanized Steel 8.8 EN20898-1	Galvanized Steel 8.8 EN20898-1
07	Socket springs	Galvanized Steel	Galvanized Steel
08	Stem seals	RPTFE	RPTFE

Nota: Combinazioni materiali non standard a richiesta
Note: Non standard materials combinations on request

Valvole a sfera filettate tipo monoblocco con motore elettrico
End entry (monobloc) threaded ball valves with electric motor

Tab.202 ME/PS

Conform to:
ANSI B16.34
BS 5351 / ISO17292

DETAIL - DETTAGLIO "A"

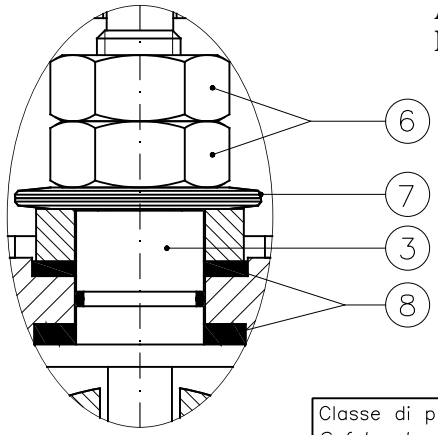

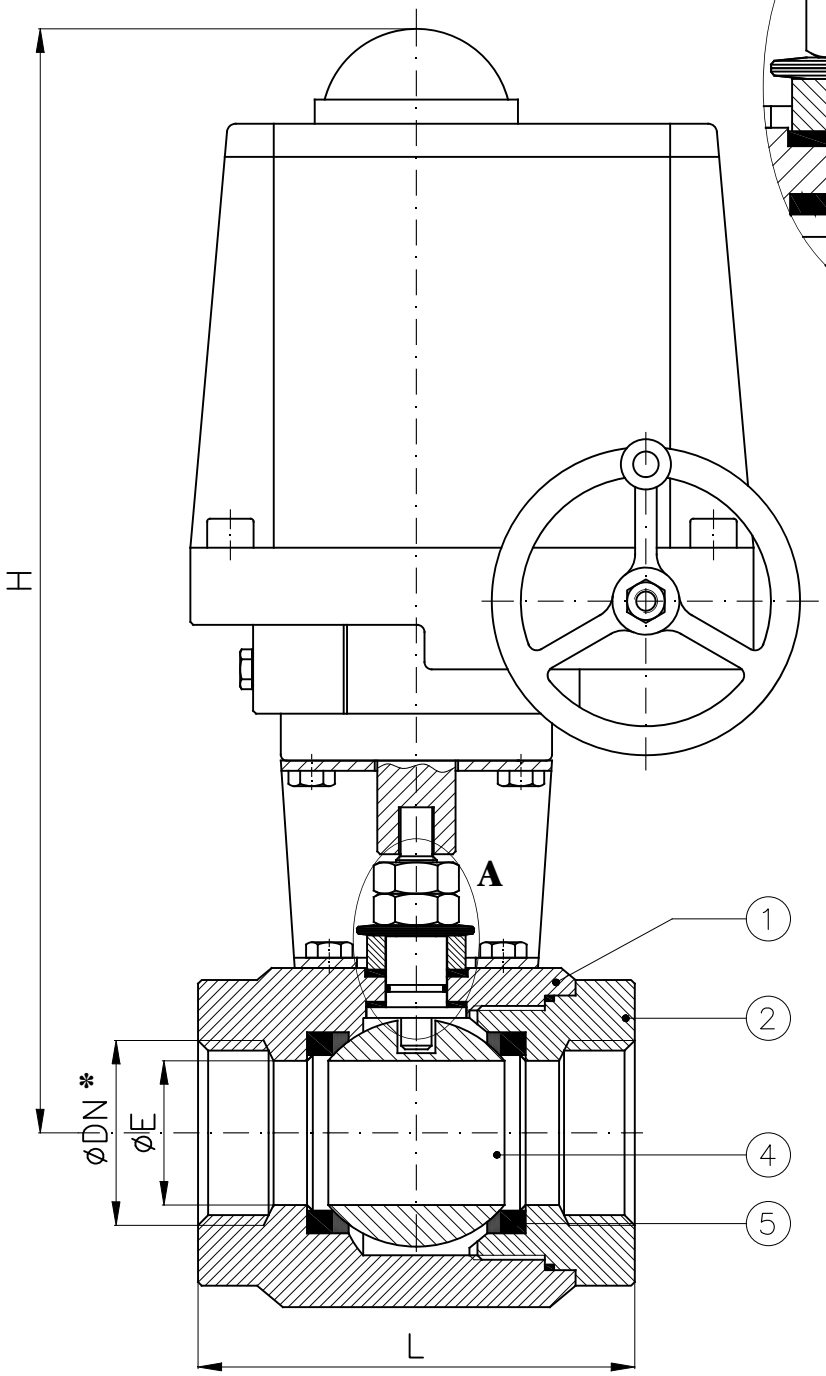

Classe di protezione : IP67 o IP68
Safety class : IP67 or IP68

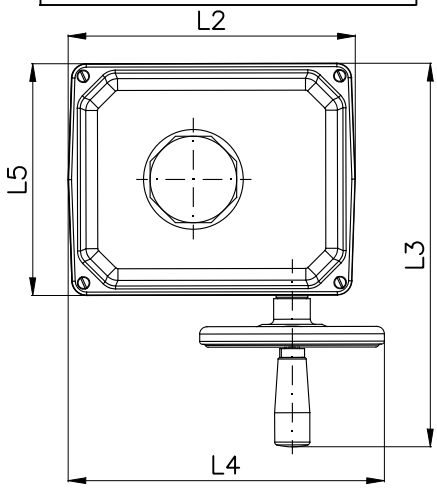

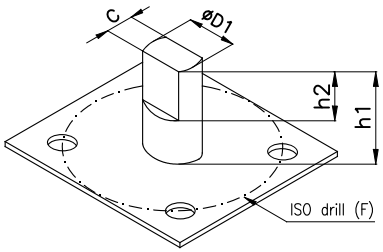

DN		D1xC	h1	h2	ISO–F
15	1/2"	10x5.5	23	10	F03
20	3/4"	12x7.5	29	11	F04
25	1"	12x7.5	28	12	F04
32	1"1/4	14x9	45	18	F05
40	1"1/2	14x9	44	19	F05
50	2"	14x9	46	17	F05

✻: Filettatura GAS
✻: *BSPP threaded*

DN		Electric motor	øE	H	L	L2	L3	L4	L5	Weight (Kg)
15	1/2"	PSQ–E100	14	355	75	174	251	206	158	7.5
20	3/4"	PSQ–E100	19	365	90	174	251	206	158	8.5
25	1"	PSQ–E100	25	370	100	174	251	206	158	9.5
32	1"1/4	PSQ–E100	32	375	115	174	251	206	158	11
40	1"1/2	PSQ–E100	38	380	128	174	251	206	158	11.5
50	2"	PSQ–E100	48	385	147	174	251	206	158	13

Combinazione materiali standard – Standard materials Combination

ITEM	DENOMINAZIONE DENOMINATION	A/316 MATERIALE MATERIAL	316/316 MATERIALE MATERIAL
01	Body	Forged steel ASTM A105N	Stainless steel AISI316 UNI EN10088
02	Lateral	Forged steel ASTM A105N	Stainless steel AISI316 UNI EN10088
03	Stem	Stainless steel AISI316 UNI EN10088	Stainless steel AISI316 UNI EN10088
04	Ball	Stainless steel AISI316/304 UNI EN10088	Stainless steel AISI316 UNI EN10088
05	Seat	PTFE/RPTFE	PTFE/RPTFE
06	Nuts	Galvanized Steel 8.8 EN20898–1	Galvanized Steel 8.8 EN20898–1
07	Socket springs	Galvanized Steel	Galvanized Steel
08	Stem seals	RPTFE	RPTFE

Nota: Combinazioni materiali non standard a richiesta
Note: Non standard materials combinations on request

Valvole a sfera filettate tipo monoblocco con motore elettrico

End entry (monobloc) threaded ball valves with electric motor

Tab.202
ME/VAL

Conform to:
ANSI B16.34
BS 5351 / ISO17292

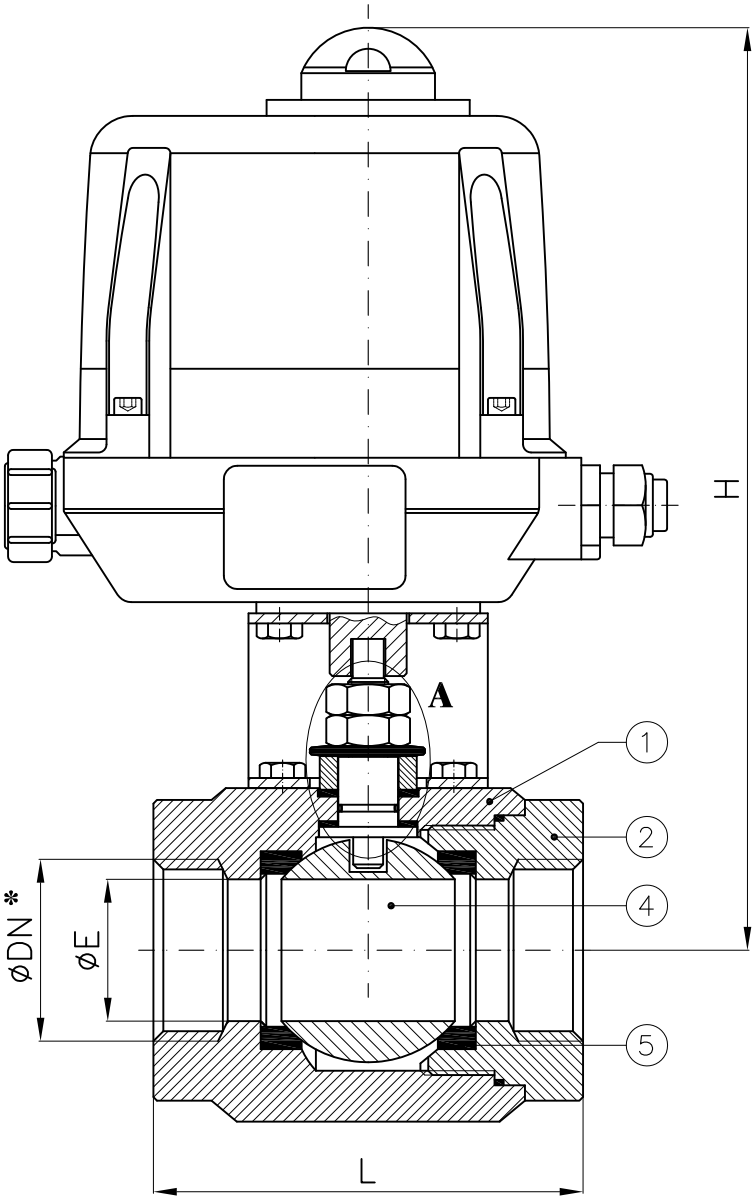

DETAIL - DETTAGLIO "A"

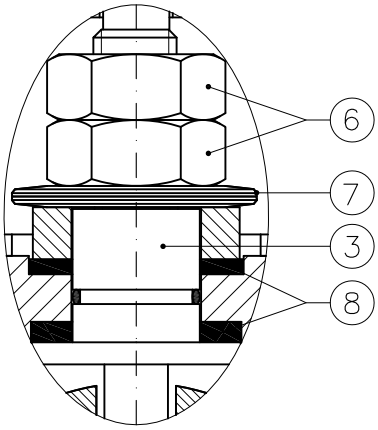

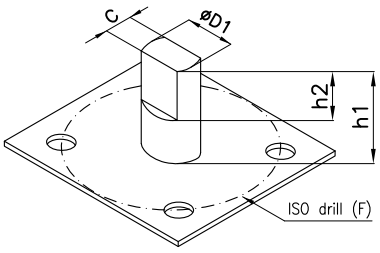

DN		D1xC	h1	h2	ISO–F
15	1/2"	10x5.5	23	10	F03
20	3/4"	12x7.5	29	11	F04
25	1"	12x7.5	28	12	F04
32	1"1/4	14x9	45	18	F05
40	1"1/2	14x9	44	19	F05
50	2"	14x9	46	17	F05

✻: Filettatura GAS

✻: *BSPP threaded*

DN		Electric motor	H (~)	L	Weight (Kg)
15	1/2"	VR25	290	75	4.5
20	3/4"	VR25	295	90	5.3
25	1"	VR45	300	100	6.5
32	1"1/4	VR75	305	115	8
40	1"1/2	VR75	310	128	8.5
50	2"	VR75	315	147	10

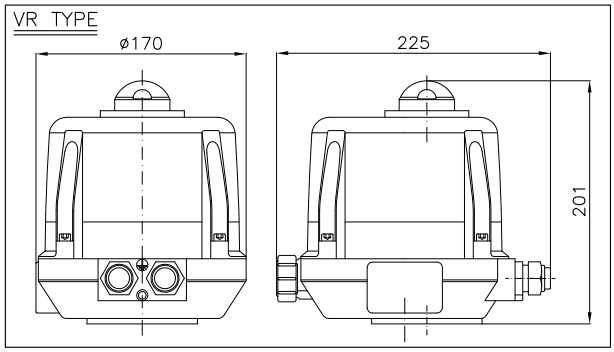

Combinazione materiali standard – Standard materials Combination			
		A/316	316/316
ITEM	DENOMINAZIONE DENOMINATION	MATERIALE MATERIAL	MATERIALE MATERIAL
01	Body	Forged steel ASTM A105N	Stainless steel AISI316 UNI EN10088
02	Lateral	Forged steel ASTM A105N	Stainless steel AISI316 UNI EN10088
03	Stem	Stainless steel AISI316 UNI EN10088	Stainless steel AISI316 UNI EN10088
04	Ball	Stainless steel AISI316/304 UNI EN10088	Stainless steel AISI316 UNI EN10088
05	Seat	PTFE/RPTFE	PTFE/RPTFE
06	Nuts	Galvanized Steel 8.8 EN20898–1	Galvanized Steel 8.8 EN20898–1
07	Socket springs	Galvanized Steel	Galvanized Steel
08	Stem seals	RPTFE	RPTFE

Nota: Combinazioni materiali non standard a richiesta
Note: Non standard materials combinations on request

Conform to:

ANSI B16.34
BS 5351 / ISO17292

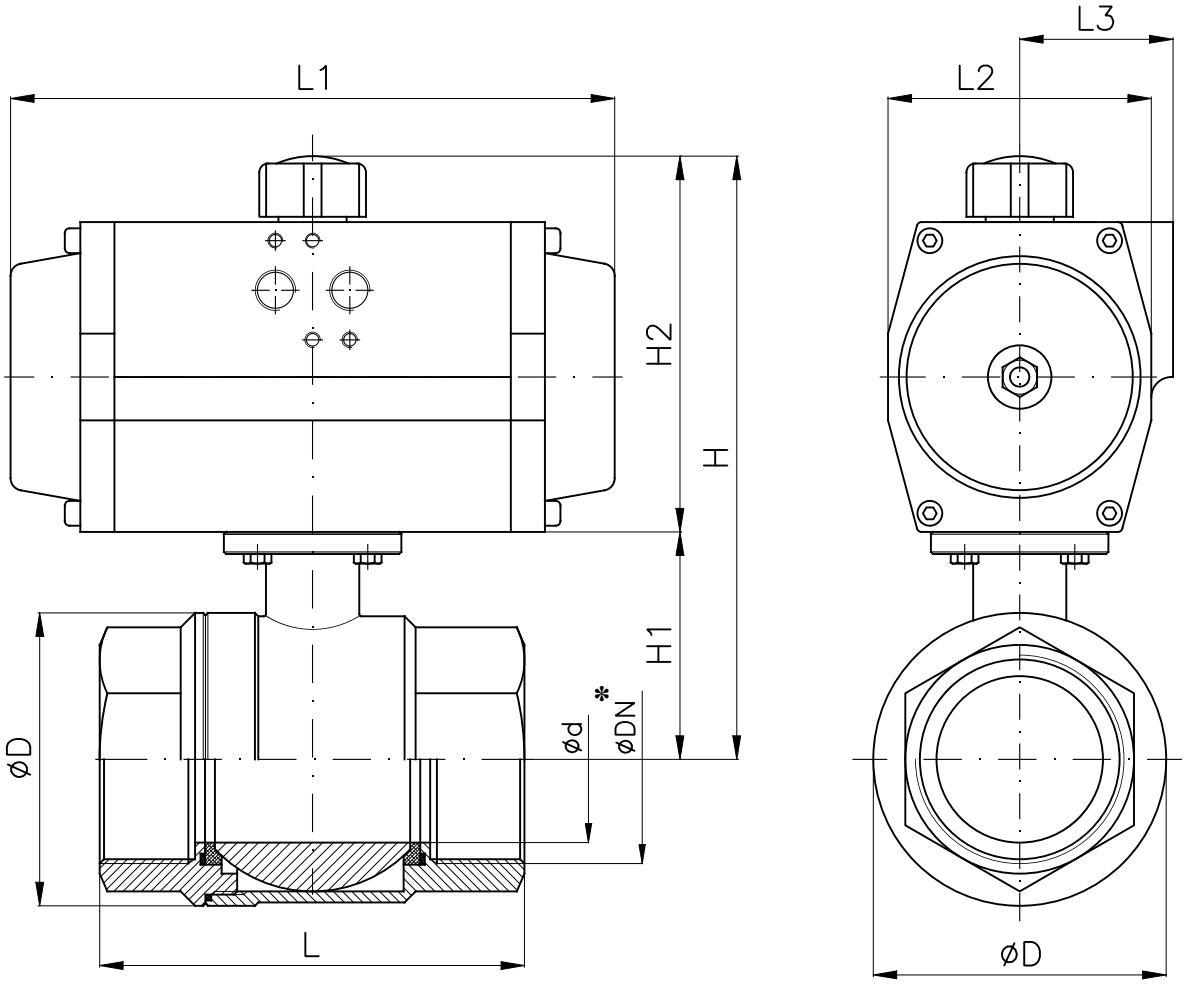

*: Filettatura GAS DA: DOUBLE ACTING
*: BSPP threaded SR: SIMPLE ACTING (Spring Return)

DN		Pneumatic Actuator	D	d	H (~)	H1	H2	L	L1	L2	L3	Weight (Kg)
8	1/4"	AP0 DA	32.4	11	110	36	70	49.6	110	45	28.5	0.9
		AP1 SR			130		92		137	60	41	1.6
10	3/8"	AP0 DA	32.4	12.7	110	36	70	49.6	110	45	28.5	0.9
		AP1 SR			130		92		137	60	41	1.6
15	1/2"	AP1 DA	34.6	15	130	38	92	55	137	60	41	1.6
		AP1 SR										1.7
20	3/4"	AP1 DA	43.9	20	135	41.7	92	75.5	137	60	41	1.8
		AP2 SR			150		108		150	73	44.5	2.5
25	1"	AP1 DA	50.3	25	140	44.4	92	82.5	137	60	41	2
		AP2 SR			155		108		150	73	44.5	2.7
32	1"1/4	AP2 DA	62.6	32	165	54	108	90.8	150	73	44.5	3
		AP3 SR			180		125		204	85	49.5	4.8
40	1"1/2	AP2 DA	74.1	40	170	59.5	108	103	150	73	44.5	3.6
		AP3 SR			185		125		204	85	49.5	5.3
50	2"	AP3 DA	89.1	50	195	67	125	120	204	85	49.5	5.7
		AP3.5 SR			205		135		230	98	53	7.8
65	2"1/2	AP3.5 DA	116.7	65	240	101.5	135	155	230	98	53	11.3
		AP4 SR			255		150		271	110	58	14
80	3"	AP3.5 DA	140.7	80	250	112.5	135	182	230	98	53	14.7
		AP5 SR			305		190		360	140	70	24.5

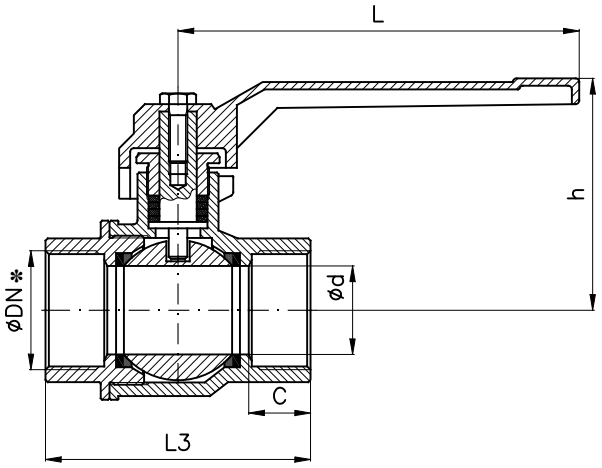

Tab.202 FF

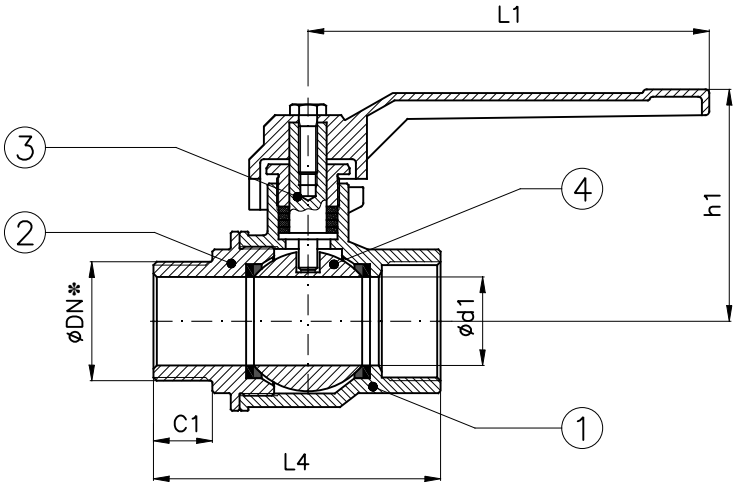

Tab.202 MF

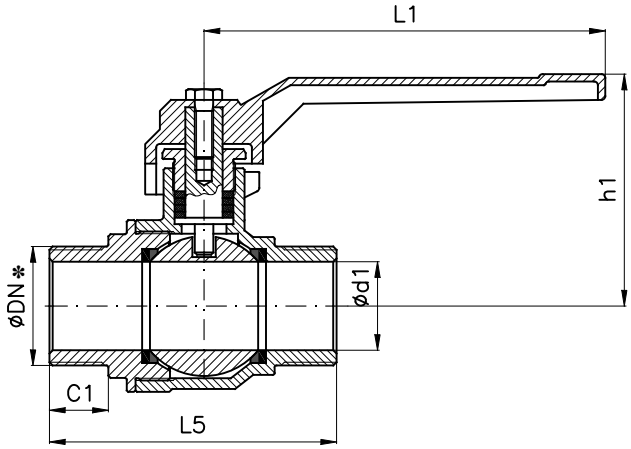

Tab.202 MM

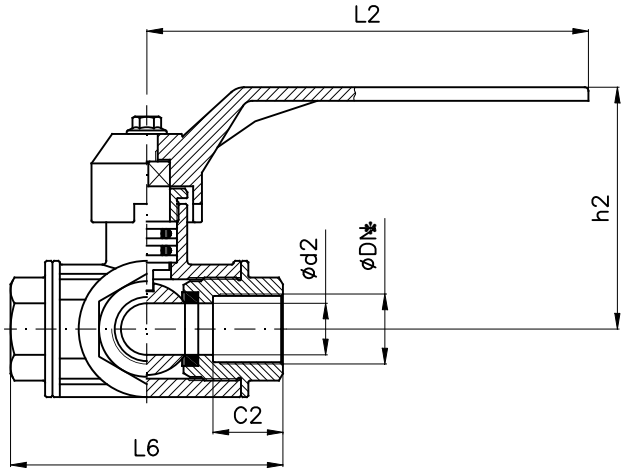

Tab.202–3–V

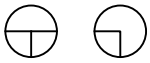

Combinazione materiali standard – Standard materials Combination		
		O/O
ITEM	DENOMINAZIONE DENOMINATION	MATERIALE MATERIAL
01	Body	Brass CW617N (OT58)
02	Lateral	Brass CW617N (OT58)
03	Stem	Brass CW617N (OT58)
04	Ball	Brass CW617N (OT58)
Nota: Combinazioni materiali non standard a richiesta		
Note: Non standard materials combinations on request		

✻: Filettatura GAS
✻: *BSPP threaded*

DN	C	C1	C2	d	d1	d2	h	h1	h2	L	L1	L2	L3	L4	L5	L6	T.202FF Weight (Kg)	T.202MF Weight (Kg)	T.202MM Weight (Kg)	T.202–3–V Weight (Kg)
1/4"	11	9	14	8	8	10	31	31	53	75	75	92	44	44	49.5	74	0.095	0.085	0.100	0.670
3/8"	11	10	14	10	10	10	33	33	53	75	75	92	45	45	50.5	74	0.105	0.100	0.115	0.645
1/2"	14	12	16	15	15	12	49	49	61	90	90	112	56	54	59.5	80	0.210	0.200	0.190	0.635
3/4"	15	13	17	20	20	15	50	50	71	90	90	150	64	62	69	89	0.310	0.300	0.295	0.865
1"	17	14	21	25	25	20	65	65	74	120	120	150	74	73	79	105	0.470	0.460	0.485	1.49
1"1/4	18	14.5	21	32	32	25	70	70	79	120	120	150	85	85	88	113	0.630	0.620	0.605	2.05
1"1/2	20	17	26	40	40	31	80	80	98	150	150	240	98	96	104	140	1.040	0.990	1.030	3.72
2"	21	20	30	49	49	40	87	87	102	150	150	240	110	110	120	161	1.470	1.45	1.55	5.86
2"1/2	21	–	–	64	–	–	120	–	–	200	–	–	134	–	–	–	2.86	–	–	–
3"	25	–	–	78	–	–	135	–	–	240	–	–	160	–	–	–	4.67	–	–	–
4"	30	–	–	90	–	–	145	–	–	240	–	–	186	–	–	–	7.40	–	–	–

Valvole a sfera in bronzo a passaggio totale PN32

Full bore bronze ball valves NP32

Art.1300

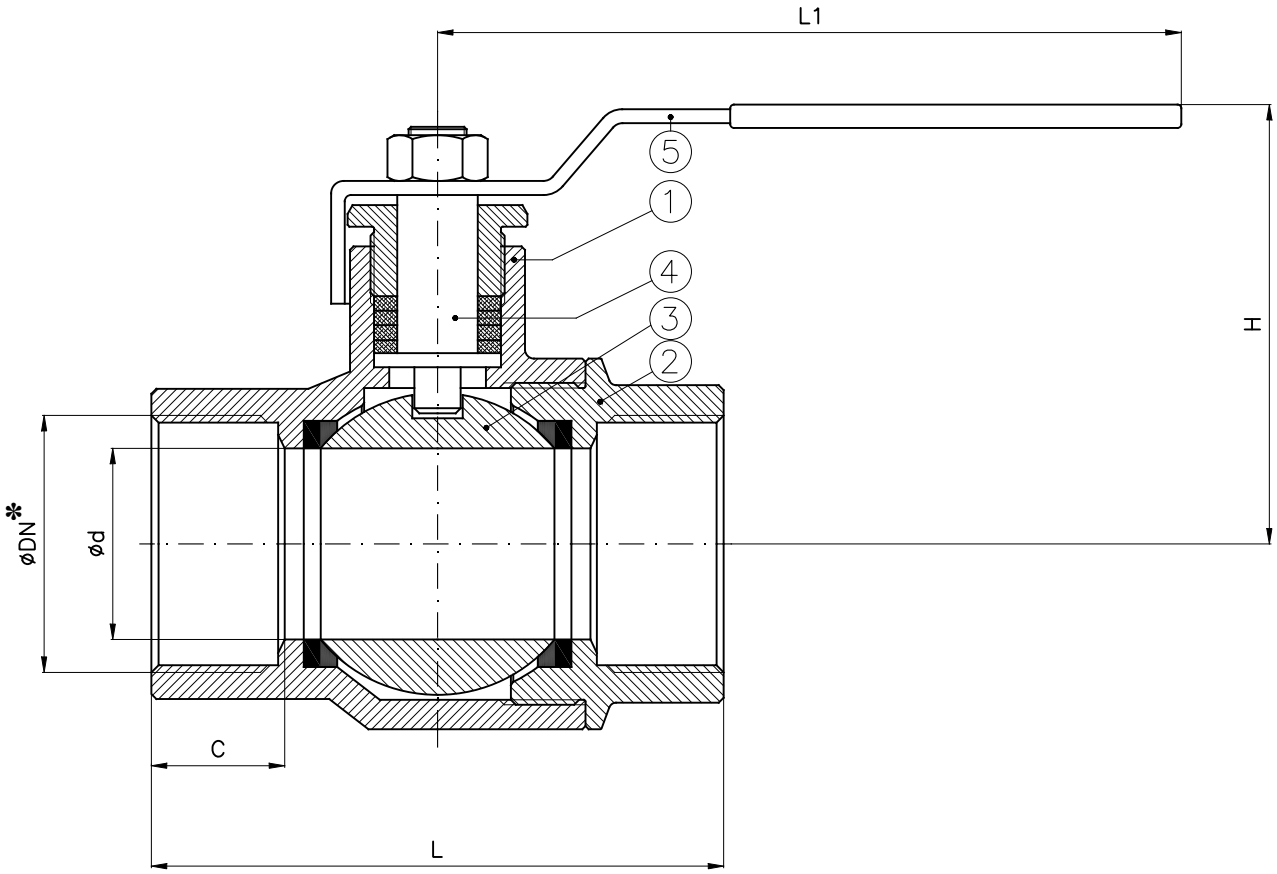

✻ : Filettatura GAS
✻ : *BSPP threaded*

DN	C	d	H (~)	L	L1	Weight (Kg)
1/4"	12	12	48	51	85	0.2
3/8"	13	12	48	51	85	0.25
1/2"	17	15	45	62	85	0.3
3/4"	17	19	58	70	104	0.36
1"	21	25	58	85	104	0.62
1"1/4	23	32	75	99	122	1
1"1/2	24	40	78	110	122	1.7
2"	28	50	93	134	153	2.5
2"1/2	28	60	120	142	200	3.4
3"	31	76	134	178	280	6.7
4"	33	95	154	210	280	10.6

Combinazione materiali standard – Standard materials Combination		
		B/O
ITEM	DENOMINAZIONE DENOMINATION	MATERIALE MATERIAL
01	Body	Bronze UNI EN1982 G–CuSn5Zn5Pb5
02	Hose–coupling	Bronze UNI EN1982 G–CuSn5Zn5Pb5
03	Ball	Brass CW617N (OT58)
04	Stem	Brass CW614N (OT58)
05	Lever	Galvanized Steel

Nota: Combinazioni materiali non standard a richiesta
Note: Non standard materials combinations on request

Valvole a sfera, passaggio totale in acciaio inox AISI316
Full bore ball valves stainless steel AISI316

Art.2006
Art.2013

Art.2006

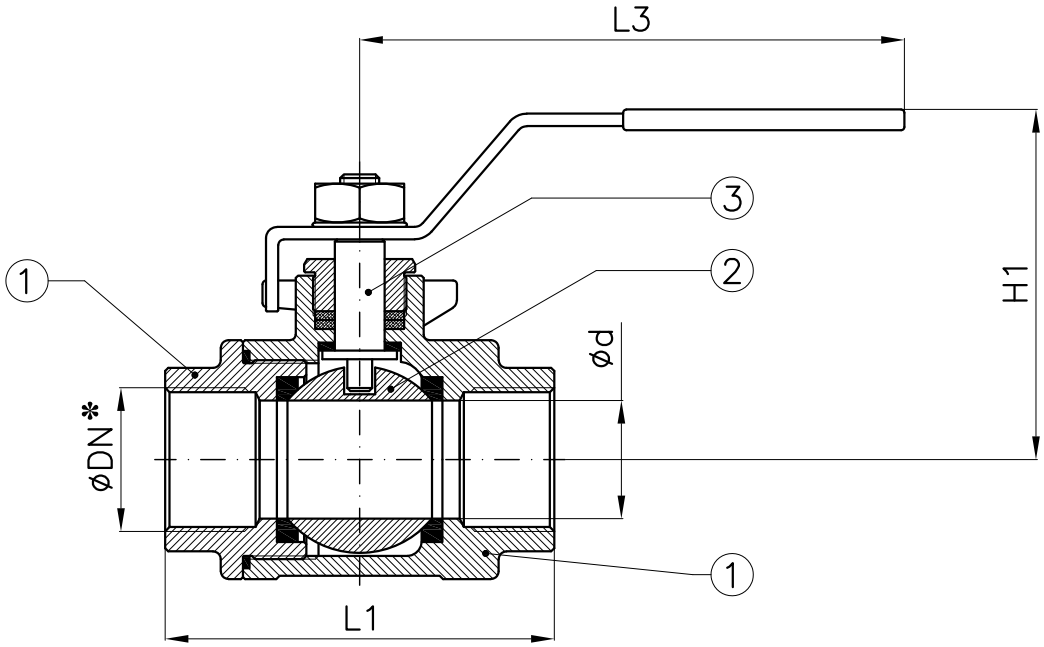

Art.2013

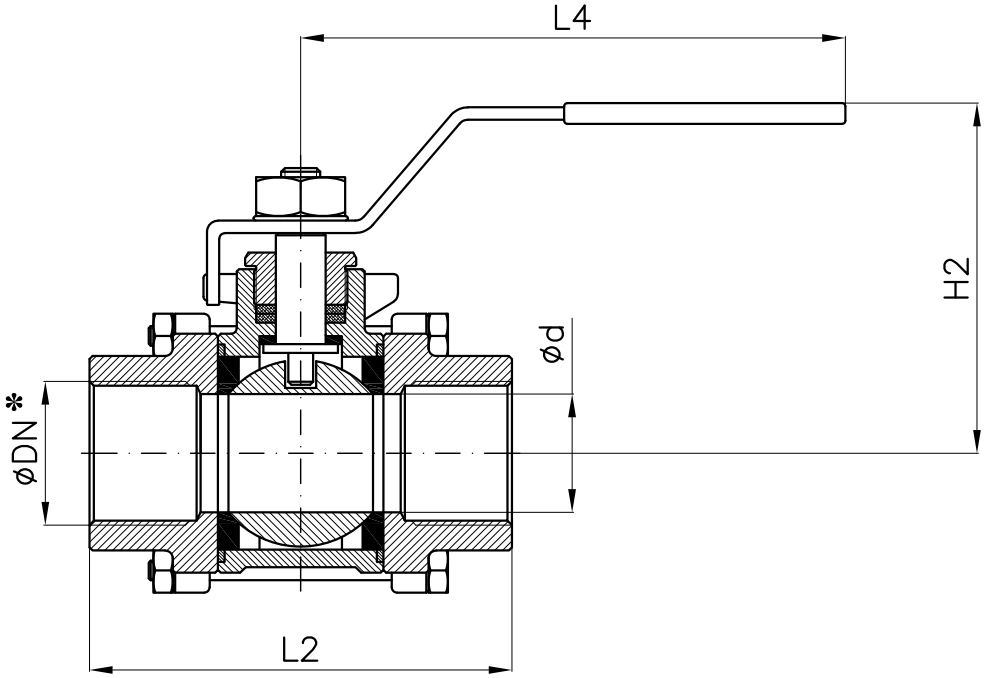

*: Filettatura GAS
*: *BSPP threaded*

DN	d	H1	L1	L3	H2	L2	L4	Weight (Kg) (~)
1/4"	10	64	52	100	–	–	–	0.2
3/8"	12	64	52	100	–	–	–	0.3
1/2"	15	66	57	100	49	72	115	0.3
3/4"	20	66	65	115	52	87	115	0.5
1"	26	80	75	115	62	93	143	0.8
1"1/4	32	86	87	143	66	110	143	1.2
1"1/2	38	97	97	143	77	123	178	1.8
2"	50	105	120	170	85	142	178	2.7
2"1/2	63	146	148	250	139	175	250	4.5
3"	76	155	170	250	150	200	251	
4"	100		215		–	–	–	

Combinazione materiali standard – Standard materials Combination		
		CF8M/316
ITEM	DENOMINAZIONE DENOMINATION	MATERIALE MATERIAL
01	Body	Stainless steel CF8M ASTM A351
02	Ball	Stainless steel AISI316 UNI EN10088
03	Stem	Stainless steel AISI316 UNI EN10088

Nota: Combinazioni materiali non standard a richiesta
Note: Non standard materials combinations on request

Valvole a sfera filettate tipo monoblocco con motore elettrico
End entry (monobloc) threaded ball valves with electric motor

Tab.202
ME/BER

Conform to:
ANSI B16.34
BS 5351 / ISO17292

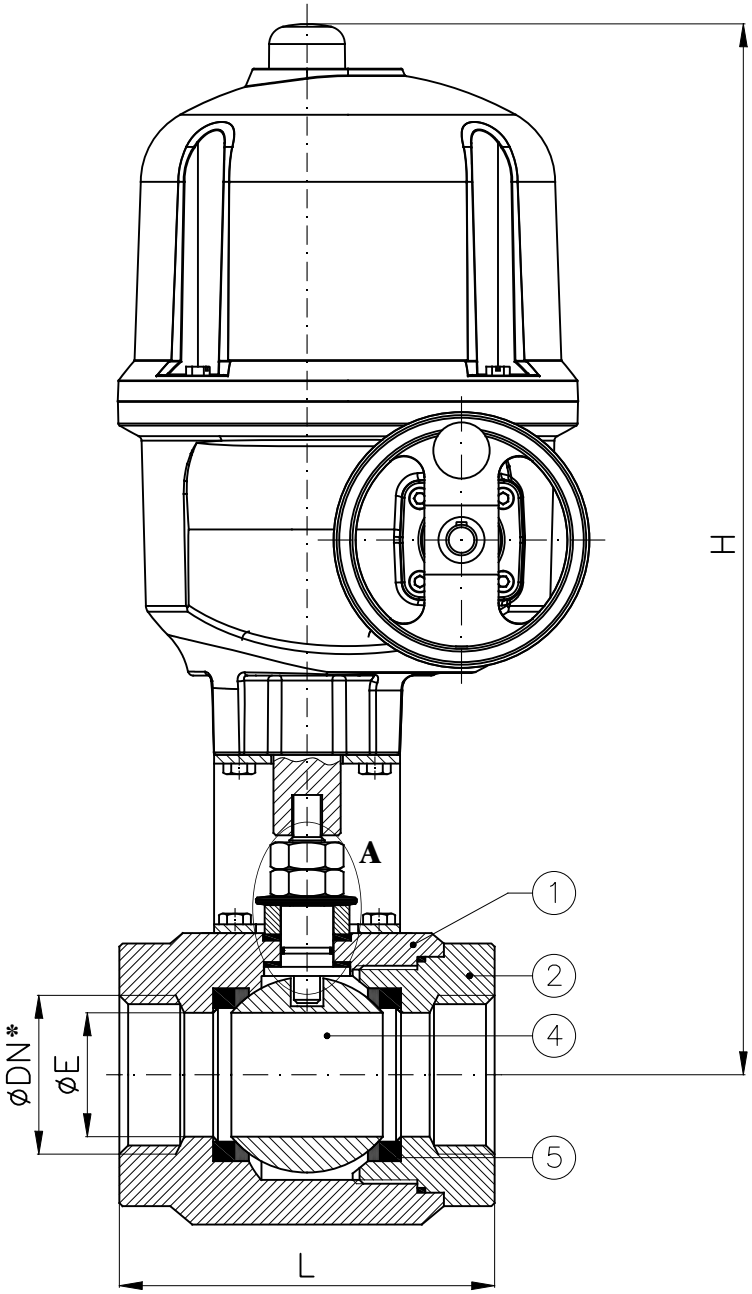

DETAIL - DETTAGLIO "A"

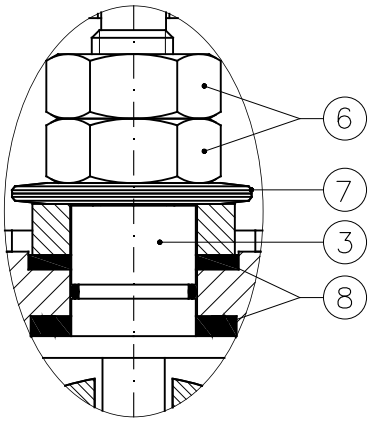

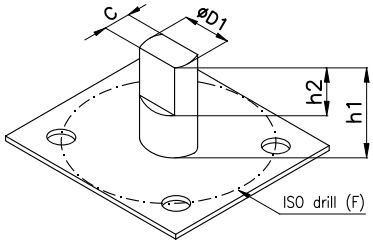

DN		D1xC	h1	h2	ISO–F
15	1/2"	10x5.5	23	10	F03
20	3/4"	12x7.5	29	11	F04
25	1"	12x7.5	28	12	F04
32	1"1/4	14x9	45	18	F05
40	1"1/2	14x9	44	19	F05
50	2"	14x9	46	17	F05

✻: Filettatura GAS
✻: *BSPP threaded*

DN		Electric Motor	E	H (~)	L	Weight (Kg)
15	1/2"	AQ5	14	375	75	12
20	3/4"	AQ5	19	380	90	13
25	1"	AQ5	25	385	100	14
32	1"1/4	AQ10	32	390	115	15
40	1"1/2	AQ10	38	395	128	16
50	2"	AQ10	48	400	147	18

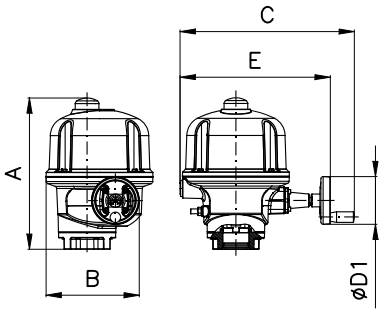

	A	B	C	E	øD1
AQ5/10	286	184	276	225	100

Combinazione materiali standard – Standard materials Combination			
		A/316	316/316
ITEM	DENOMINAZIONE DENOMINATION	MATERIALE MATERIAL	MATERIALE MATERIAL
01	Body	Forged steel ASTM A105N	Stainless steel AISI316 UNI EN10088
02	Lateral	Forged steel ASTM A105N	Stainless steel AISI316 UNI EN10088
03	Stem	Stainless steel AISI316 UNI EN10088	Stainless steel AISI316 UNI EN10088
04	Ball	Stainless steel AISI316/304 UNI EN10088	Stainless steel AISI316 UNI EN10088
05	Seat	PTFE/RPTFE	PTFE/RPTFE
06	Nuts	Galvanized Steel 8.8 EN20898–1	Galvanized Steel 8.8 EN20898–1
07	Socket springs	Galvanized Steel	Galvanized Steel
08	Stem seals	RPTFE	RPTFE

Nota: Combinazioni materiali non standard a richiesta
Note: Non standard materials combinations on request

Valvole a sfera, passaggio totale in acciaio inox AISI316 lucchettabile
Full bore ball valves stainless steel AISI316 with locking lever

Art.2006G
Art.2013G

Art.2006G

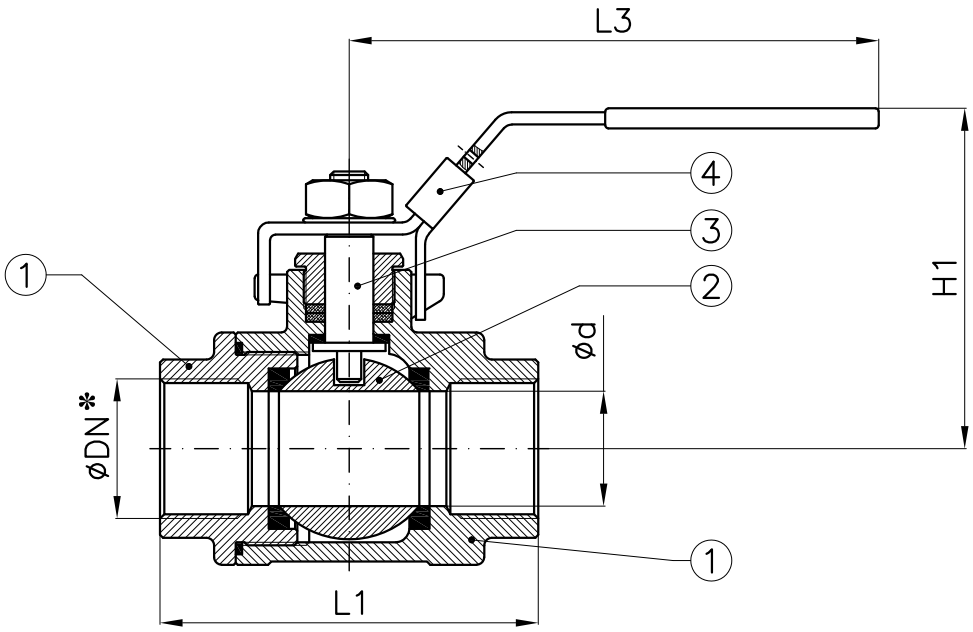

Art.2013G

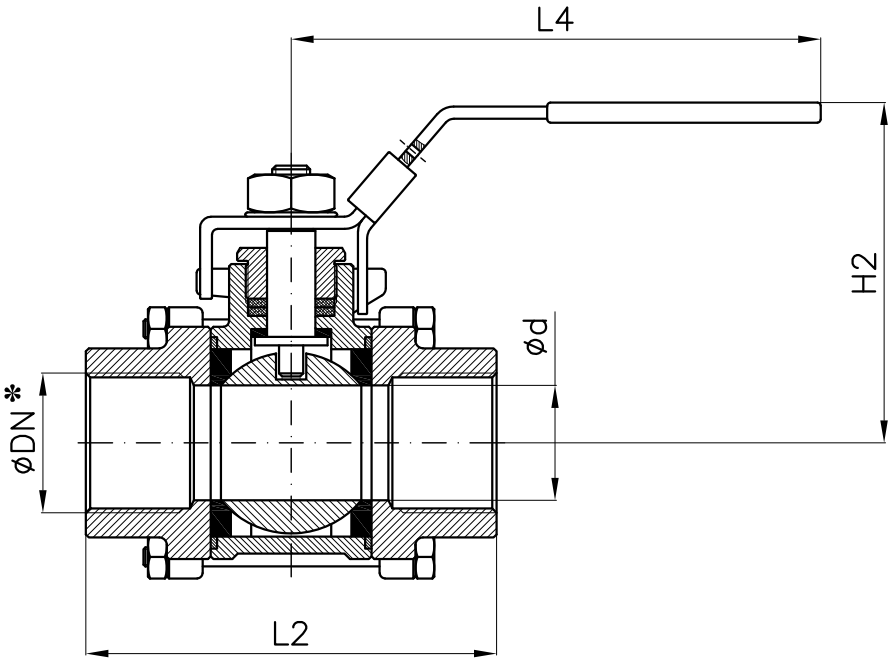

*: Filettatura GAS

*: *BSPP threaded*

DN	d	H1	L1	L3	H2	L2	L4
1/4"	9	42	40	75	–	–	–
3/8"	12.5	42	42.5	75	–	–	–
1/2"	15	48	50	85	49	62	100
3/4"	20	51	56	100	60	69	112
1"	25	61	68	105	64	79	112
1"1/4	32	78	83	120	80	96	145
1"1/2	38	82	90	120	83	102	145
2"	50	95	111	160	97	124	165
2"1/2	65	115	138	200	–	–	–
3"	76	123	156.5	200	–	–	–
4"	94	157	197	260	–	–	–

Combinazione materiali standard – Standard materials Combination		
		CF8M/316
ITEM	DENOMINAZIONE DENOMINATION	MATERIALE MATERIAL
01	Body	Stainless steel CF8M ASTM A351
02	Ball	Stainless steel AISI316 UNI EN10088
03	Stem	Stainless steel AISI316 UNI EN10088
04	Locker	Stainless steel AISI316 UNI EN10088

Nota: Combinazioni materiali non standard a richiesta
Note: Non standard materials combinations on request

Valvole a sfera, passaggio totale in acciaio inox AISI316 lucchettabile
Full bore ball valves stainless steel AISI316 with locking lever

Art.1002G

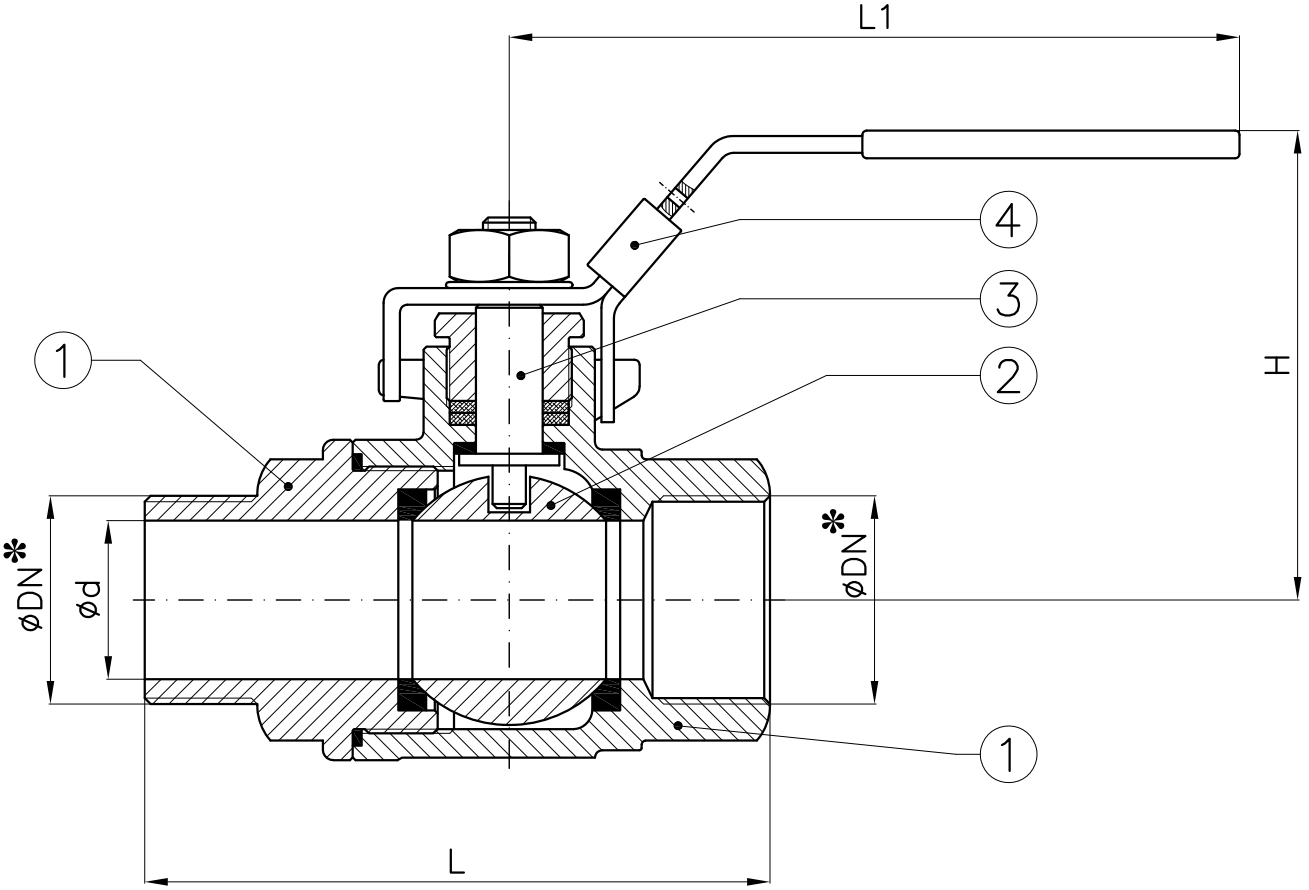

*: Filettatura GAS

*: *BSPP threaded*

DN	d	H	L	L1
1/4"	9	42	50	75
3/8"	12.5	42	52.5	75
1/2"	15	48	63	85
3/4"	20	51	70	100
1"	25	61	83	105
1"1/4	32	78	97	120
1"1/2	38	82	107	120
2"	50	95	131	160

Combinazione materiali standard – Standard materials Combination		
		CF8M/316
ITEM	DENOMINAZIONE DENOMINATION	MATERIALE MATERIAL
01	Body	Stainless steel CF8M ASTM A351
02	Ball	Stainless steel AISI316 UNI EN10088
03	Stem	Stainless steel AISI316 UNI EN10088
04	Locker	Stainless steel AISI316 UNI EN10088
Nota: Combinazioni materiali non standard a richiesta Note: Non standard materials combinations on request		

Valvole a sfera, passaggio totale in acciaio inox con maniglia a farfalla
Full bore ball valves stainless steel with butterfly handle

Art.1003G

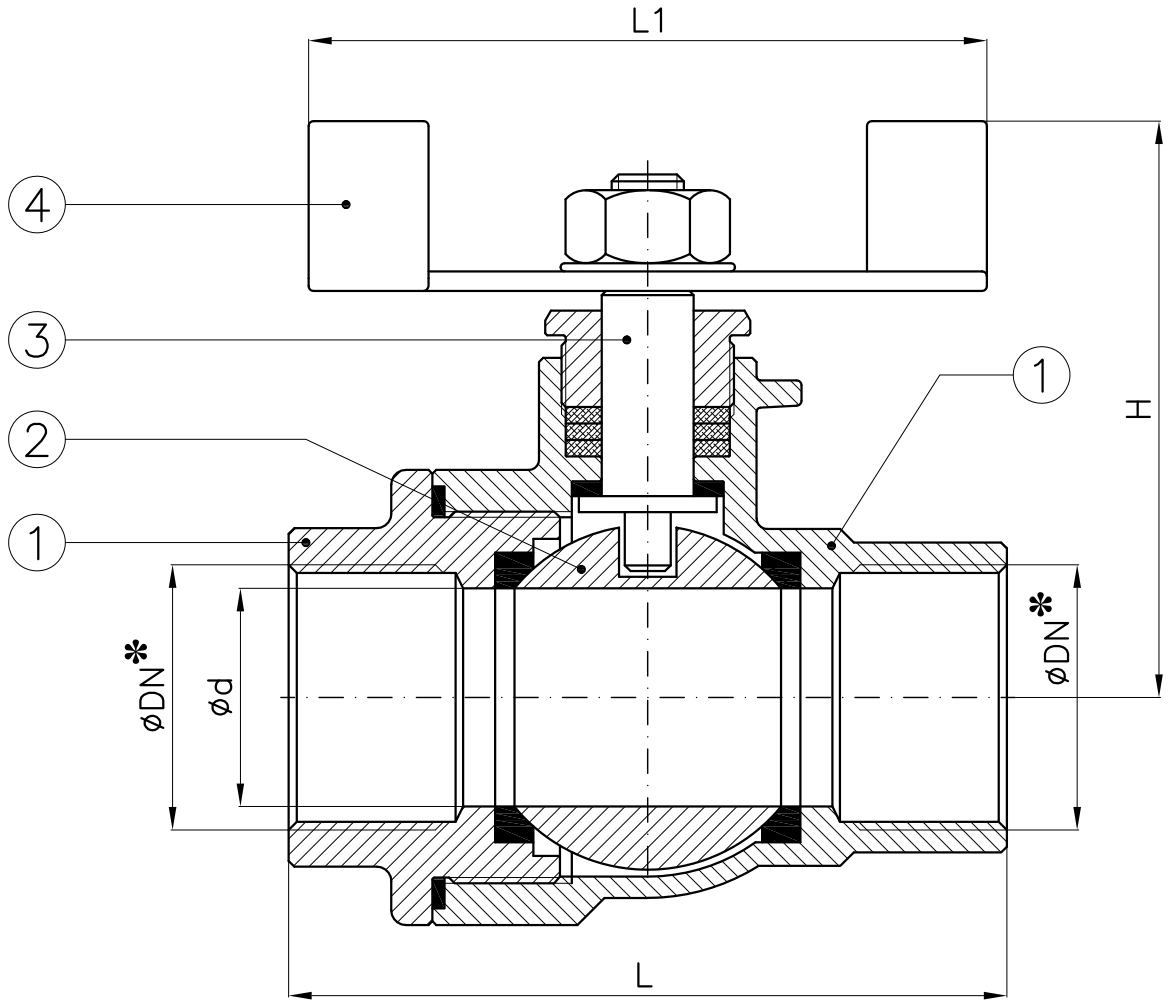

*: Filettatura GAS

*: *BSPP threaded*

DN	d	H	L	L1
1/4"	9	37	40	45
3/8"	12.5	39	42.5	45
1/2"	15	47	50	55
3/4"	20	51	56	55
1"	25	59	68	68

Combinazione materiali standard – Standard materials Combination		
		CF8M/316
ITEM	DENOMINAZIONE DENOMINATION	MATERIALE MATERIAL
01	Body	Stainless steel CF8M ASTM A351
02	Ball	Stainless steel AISI316 UNI EN10088
03	Stem	Stainless steel AISI316 UNI EN10088
04	Handle	Stainless steel AISI316 UNI EN10088
Nota: Combinazioni materiali non standard a richiesta Note: Non standard materials combinations on request		

Valvole a sfera, passaggio totale in acciaio inox con maniglia a farfalla
Full bore ball valves stainless steel with butterfly handle

Art.1005G

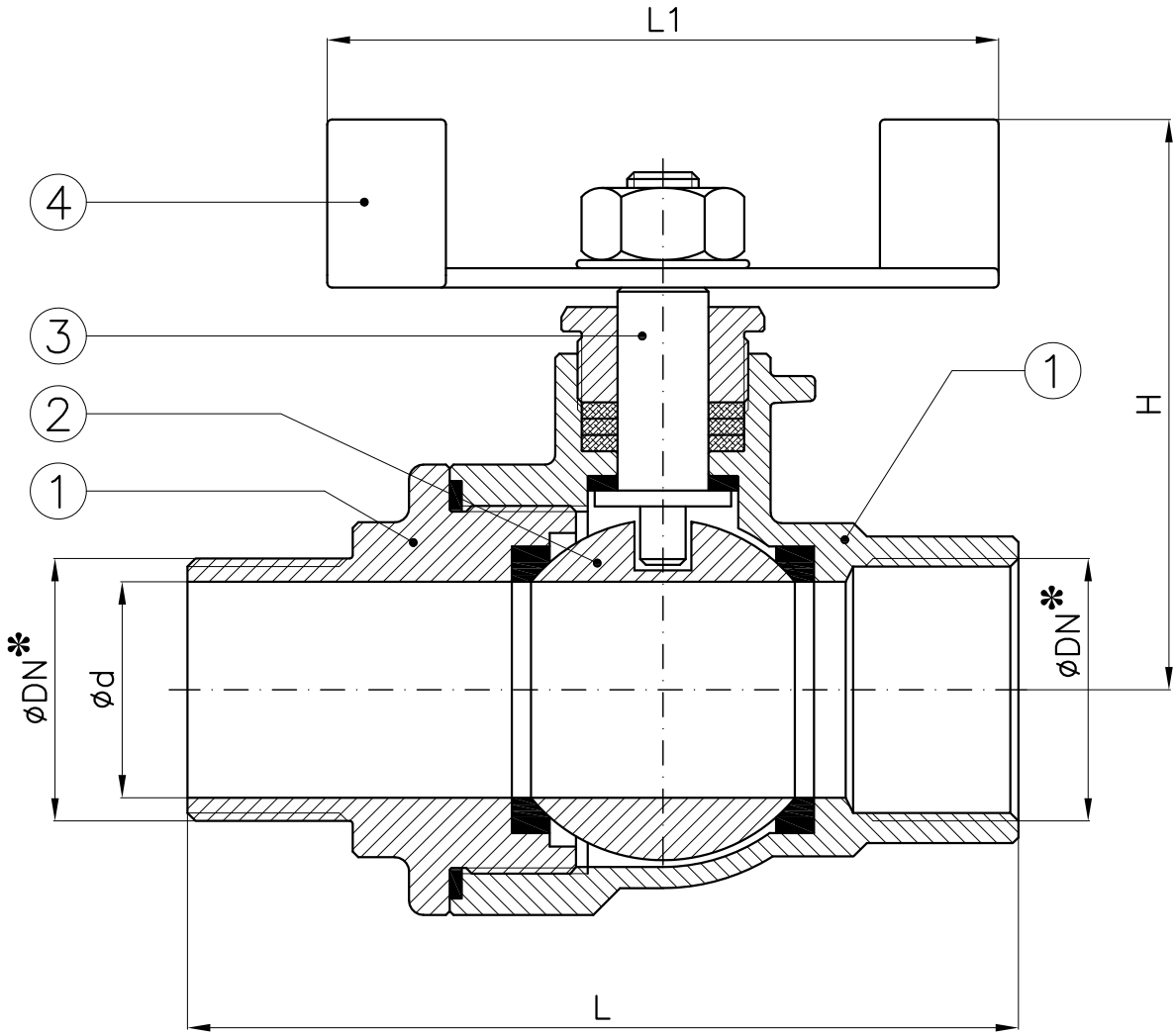

*: Filettatura GAS

*: *BSPP threaded*

DN	d	H	L	L1
1/4"	9	37	50	45
3/8"	12.5	39	52.5	45
1/2"	15	47	63	55
3/4"	20	51	70	55
1"	25	59	83	68

Combinazione materiali standard – Standard materials Combination		
		CF8M/316
ITEM	DENOMINAZIONE DENOMINATION	MATERIALE MATERIAL
01	Body	Stainless steel CF8M ASTM A351
02	Ball	Stainless steel AISI316 UNI EN10088
03	Stem	Stainless steel AISI316 UNI EN10088
04	Handle	Stainless steel AISI316 UNI EN10088
Nota: Combinazioni materiali non standard a richiesta Note: Non standard materials combinations on request		

Valvole a sfera, passaggio totale con motore elettrico
Full bore ball valves with electric motor

Art.2006
ME/AOX

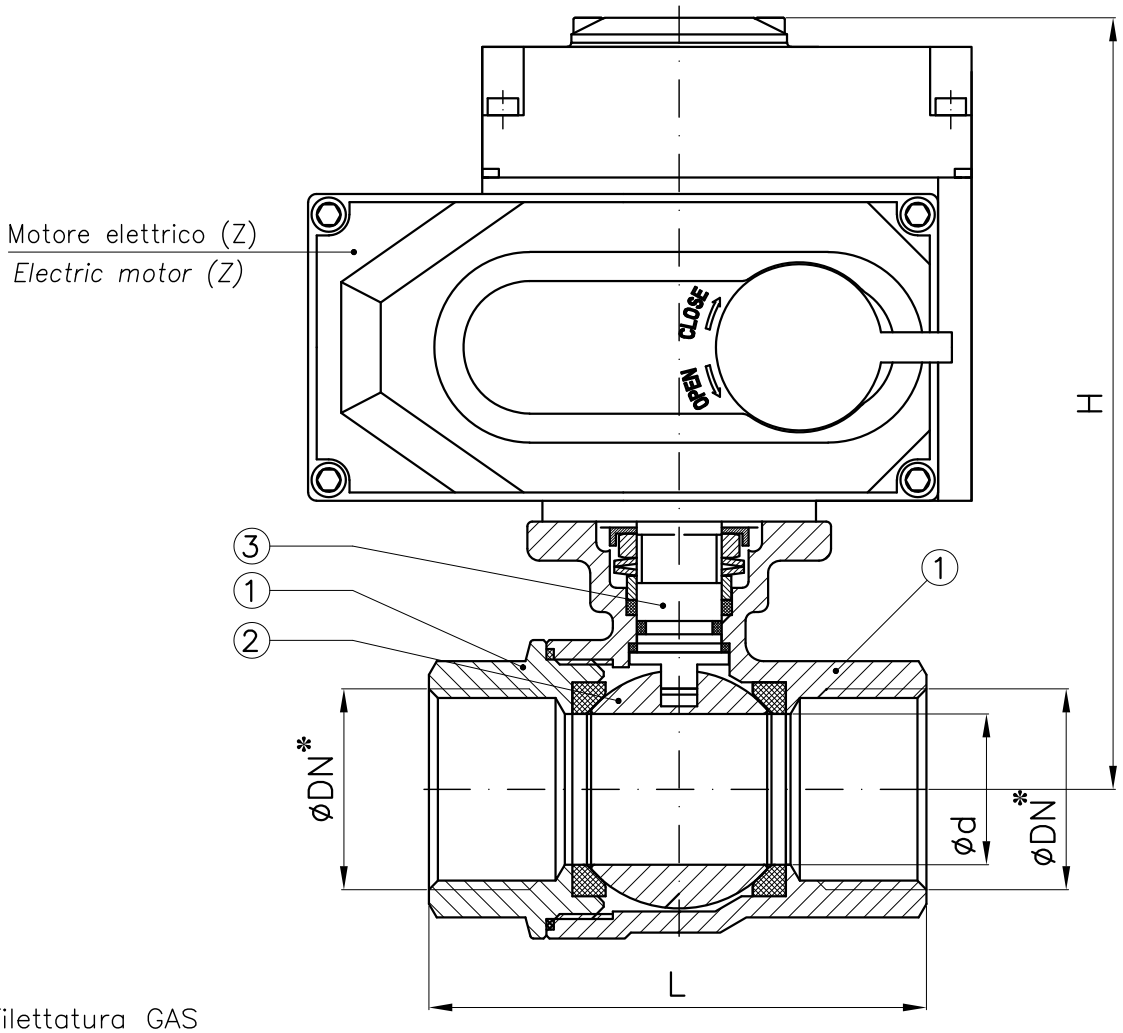

✻: Filettatura GAS
✻: *BSPP threaded*

DN	Electric motor	d	L	H	L2	L3	L4	L5
1/4"	AOX–003	11	50	140	123	113	100	25
3/8"	AOX–003	12.7	50	140	123	113	100	25
1/2"	AOX–003	15	55	143	123	113	100	25
3/4"	AOX–003	20	71	149	123	113	100	25
1"	AOX–003	25	83	153	123	113	100	25
1"1/4	AOX–005	32	91	166	160	121	121	25
1"1/2	AOX–005	40	103	176	160	121	121	25
2"	AOX–005	50	120	183	160	121	121	25

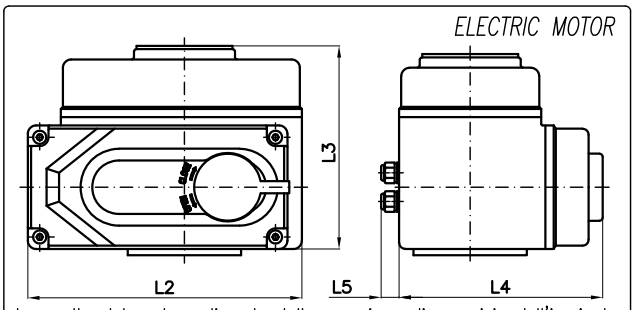

La scelta del motore dipende dalla pressione di esercizio dell'impianto
The choice of the motor depends from plant working pressure

Combinazione materiali standard – Standard materials Combination		
		CF8M/316
ITEM	DENOMINAZIONE DENOMINATION	MATERIALE MATERIAL
01	Body	Stainless steel CF8M ASTM A351
02	Ball	Stainless steel AISI316 UNI EN10088
03	Stem	Stainless steel AISI316 UNI EN10088

Nota: Combinazioni materiali non standard a richiesta
Note: Non standard materials combinations on request

Valvole a sfera a tre vie a corpo piatto PN6-10DIN-16-ANSI150-ANSI300
Three ways ball valves wafer type NP6-10DIN-16-ANSI150-ANSI300

Tab.103L

Conform to:
UNI EN1092
ANSI16.5

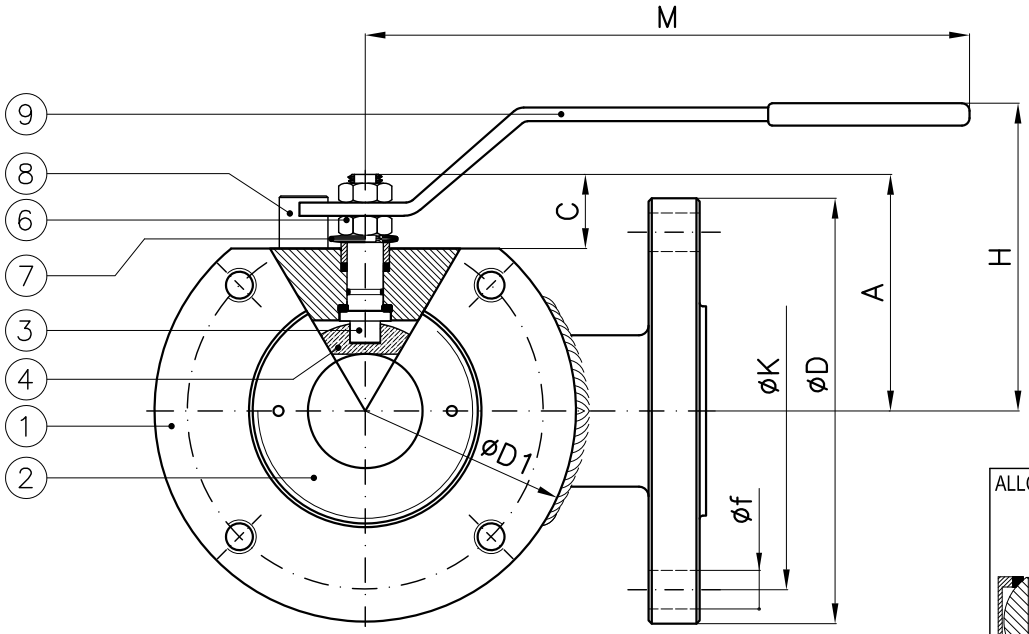

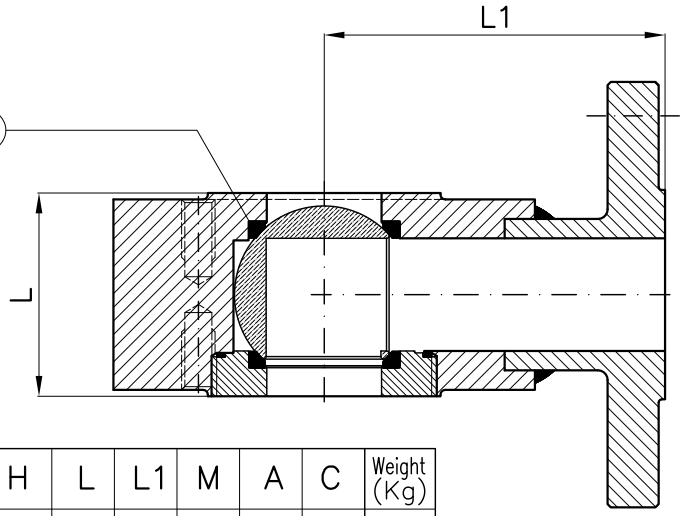

ALLOWABLE POSITIONING AT THREE WAYS
POSIZIONI POSSIBILI CON TRE VIE

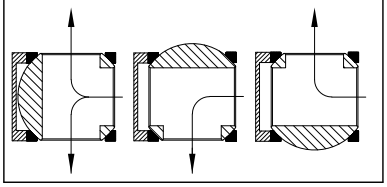

ALLOWABLE POSITIONING AT TWO WAYS
POSIZIONI POSSIBILI CON DUE VIE

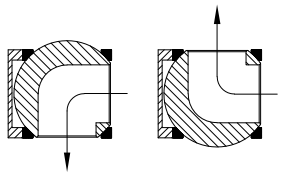

DN	D1	H	L	L1	M	A	C	Weight (Kg)
15	88	78	35	85	150	50	19	1.5
20	98	87	42	90	185	60	23	2
25	108	91	46	90	185	65	23	2.7
32	128	106	55	105	280	80	29	3.8
40	138	111	66	120	280	90	30	6.5
50	148	120	72	130	280	96	32	8
65	168	157	98	150	380	132	53	15
80	188	161	120	175	380	139	48	20
100	220	181	140	185	480	160	55	30

Combinazione materiali standard – Standard materials Combination			
		A/316	316/316
ITEM	DENOMINAZIONE DENOMINATION	MATERIALE MATERIAL	MATERIALE MATERIAL
01	Body	Forged steel ASTM A105N	Stainless steel AISI316 UNI EN10088
02	Lateral	Forged steel ASTM A105N	Stainless steel AISI316 UNI EN10088
03	Stem	Stainless steel AISI316 UNI EN10088	Stainless steel AISI316 UNI EN10088
04	Ball	Stainless steel AISI316/304 UNI EN10088	Stainless steel AISI316 UNI EN10088
05	Seat	PTFE	PTFE
06	Lever and gland nut	Galvanized Steel 8.8 EN20898-1	Galvanized Steel 8.8 EN20898-1
07	Socket springs	Galvanized Steel	Galvanized Steel
08	Stop pin	Galvanized Steel	Galvanized Steel
09	Hand lever	Galvanized Steel	Galvanized Steel

Nota: Combinazioni materiali non standard a richiesta
Note: Non standard materials combinations on request

	PN6 – NP6				PN10 – NP10				PN16 – NP16				ANSI150				ANSI300			
DN	D	K	f	Holes No. f	D	K	f	Holes No. f	D	K	f	Holes No. f	D	K	f	Holes No. f	D	K	f	Holes No. f
15	80	55	11	4	95	65	14	4	95	65	14	4	88.9	60	16	4	95	67	16	4
20	90	65	11	4	105	75	14	4	105	75	14	4	98.4	70	16	4	117	83	19	4
25	100	75	11	4	115	85	14	4	115	85	14	4	108	79	16	4	124	89	19	4
32	120	90	14	4	140	100	18	4	140	100	18	4	118	89	16	4	133	98	19	4
40	130	100	14	4	150	110	18	4	150	110	18	4	127	98	16	4	156	114	22	4
50	140	110	14	4	165	125	18	4	165	125	18	4	152	121	19	4	165	127	19	8
65	160	130	14	4	185	145	18	4	185	145	18	4	178	140	19	4	191	149	22	8
80	190	150	18	4	200	160	18	8	200	160	18	8	190	152	19	4	210	168	22	8
100	210	170	18	4	220	180	18	8	220	180	18	8	229	191	19	8	254	200	22	8

Valvole a sfera a tre vie a corpo piatto PN6-10DIN-16-ANSI150-ANSI300 con motore elettrico

Three ways ball valves wafer type NP6-10DIN-16-ANSI150-ANSI300 with electric motor

Tab.103L
ME/AOX

Conform to:
UNI EN1092
ANSI16.5

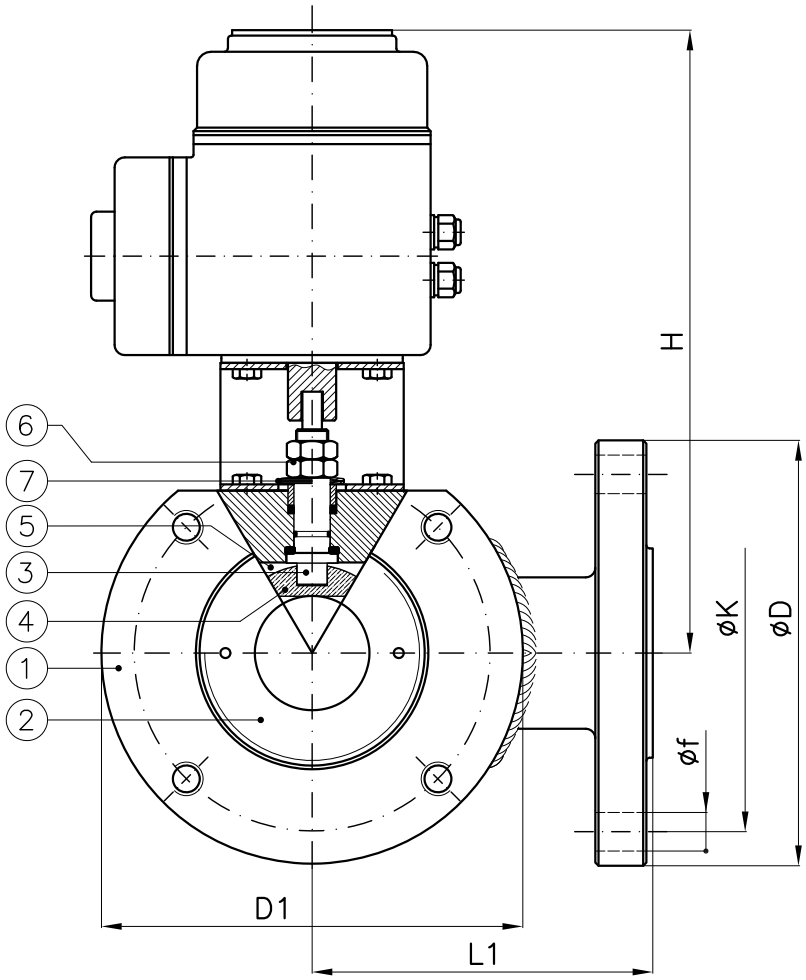

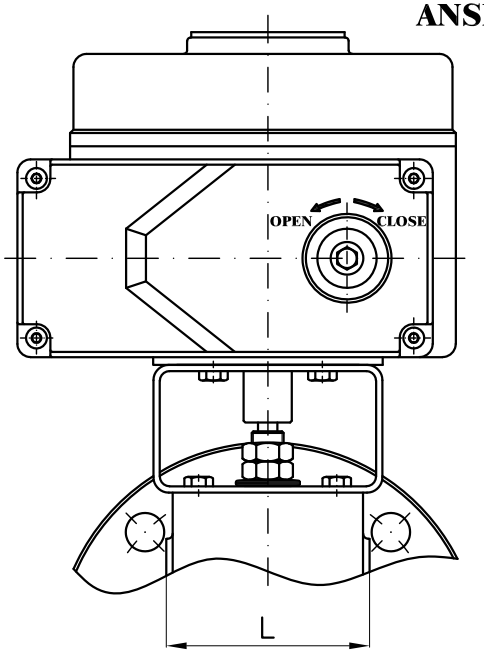

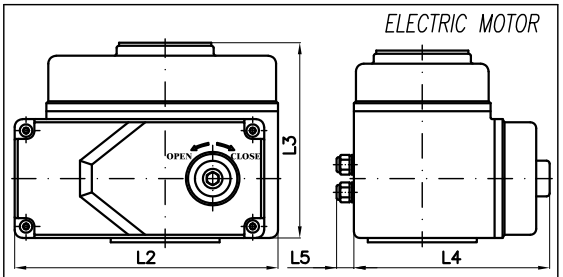

La scelta del motore dipende dalla pressione di esercizio dell'impianto
The choice of the motor depends from plant working pressure

DN	Electric motor	D1	H (~)	L	L1	L2	L3	L4	L5	Weight (Kg)
15	AOX–003	88	210	35	85	123	113	100	25	3.7
20	AOX–003	98	215	42	90	123	113	100	25	4.5
25	AOX–005	108	225	46	90	160	121	121	25	6.5
32	AOX–005	128	235	55	105	160	121	121	25	7.5
40	AOX–008	138	245	66	120	160	121	121	25	10.5
50	AOX–008	148	250	72	130	160	121	121	25	12
65	AOX–015	168	270	98	150	189	129	145	25	20
80	AOX–015	188	285	120	175	189	129	145	25	25
100	AOX–030	220	355	140	185	268	164	200	25	44

Combinazione materiali standard – Standard materials Combination			
		A/316	316/316
ITEM	DENOMINAZIONE DENOMINATION	MATERIALE MATERIAL	MATERIALE MATERIAL
01	Body	Forged steel ASTM A105N	Stainless steel AISI316 UNI EN10088
02	Lateral	Forged steel ASTM A105N	Stainless steel AISI316 UNI EN10088
03	Stem	Stainless steel AISI316 UNI EN10088	Stainless steel AISI316 UNI EN10088
04	Ball	Stainless steel AISI316/304 UNI EN10088	Stainless steel AISI316 UNI EN10088
05	Seat	PTFE	PTFE
06	Lever and gland nut	Galvanized Steel 8.8 EN20898–1	Galvanized Steel 8.8 EN20898–1
07	Socket springs	Galvanized Steel	Galvanized Steel

Nota: Combinazioni materiali non standard a richiesta
Note: Non standard materials combinations on request

	PN6 – NP6				PN10 – NP10				PN16 – NP16				ANSI150				ANSI300			
DN	D	K	f	Holes No. f	D	K	f	Holes No. f	D	K	f	Holes No. f	D	K	f	Holes No. f	D	K	f	Holes No. f
15	80	55	11	4	95	65	14	4	95	65	14	4	88.9	60	16	4	95	67	16	4
20	90	65	11	4	105	75	14	4	105	75	14	4	98.4	70	16	4	117	83	19	4
25	100	75	11	4	115	85	14	4	115	85	14	4	108	79	16	4	124	89	19	4
32	120	90	14	4	140	100	18	4	140	100	18	4	118	89	16	4	133	98	19	4
40	130	100	14	4	150	110	18	4	150	110	18	4	127	98	16	4	156	114	22	4
50	140	110	14	4	165	125	18	4	165	125	18	4	152	121	19	4	165	127	19	8
65	160	130	14	4	185	145	18	4	185	145	18	4	178	140	19	4	191	149	22	8
80	190	150	18	4	200	160	18	8	200	160	18	8	190	152	19	4	210	168	22	8
100	210	170	18	4	220	180	18	8	220	180	18	8	229	191	19	8	254	200	22	8

Valvole a sfera a tre vie a corpo piatto PN6-10DIN-16-ANSI150-ANSI300 con motore elettrico

Three ways ball valves wafer type NP6-10DIN-16-ANSI150-ANSI300 with electric motor

Tab.103L ME/CHQ

Conform to:
UNI EN1092
ANSI16.5

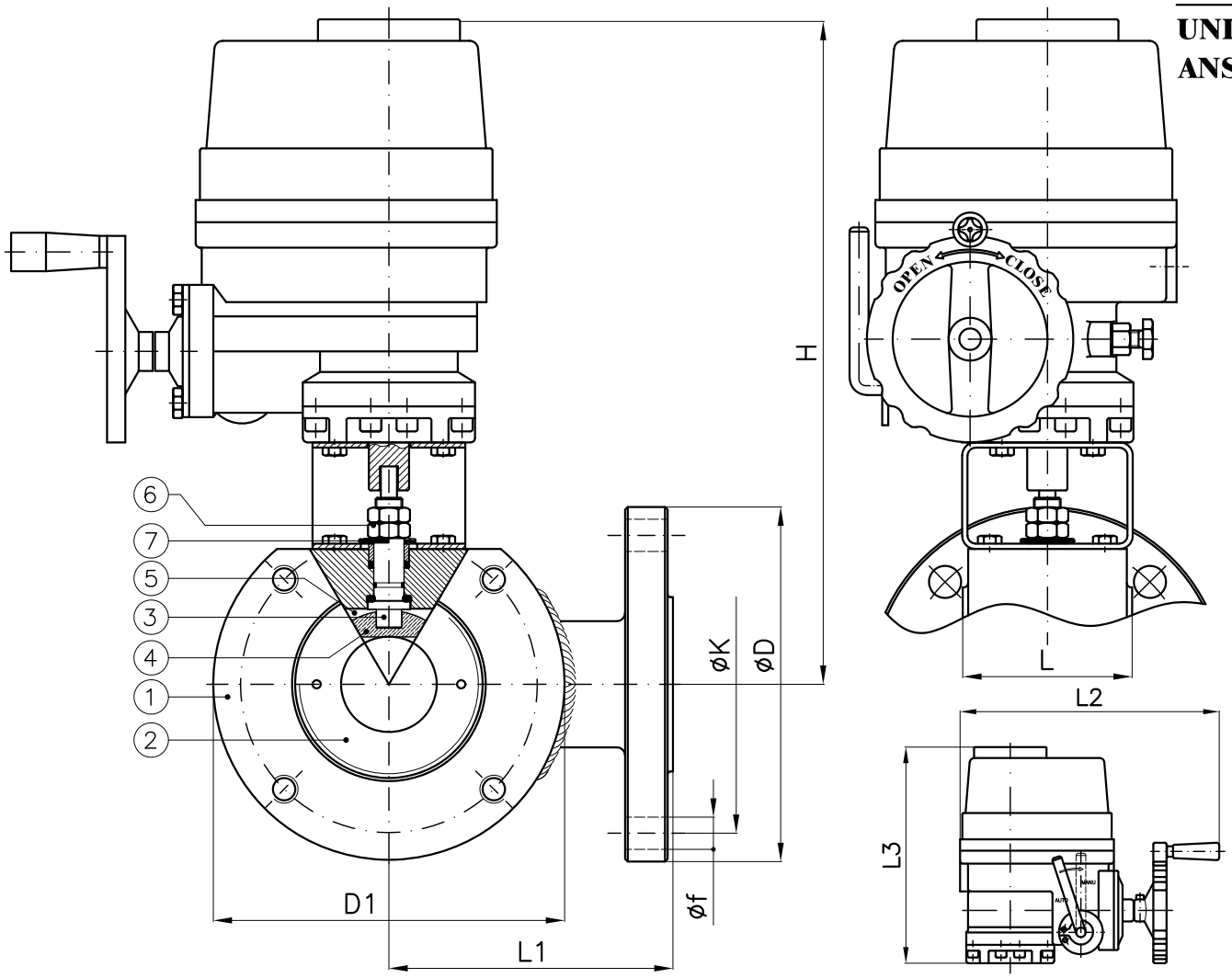

DN	Electric motor	D1	H	L	L1	L2	L3	Weight (Kg)
15	005	88	330	35	85	270	233.5	9.5
20	005	98	335	42	90	270	233.5	10
25	005	108	340	46	90	270	233.5	11
32	005	128	345	55	105	270	233.5	11.5
40	008	138	355	66	120	270	233.5	14.5
50	008	148	360	72	130	270	233.5	16
65	015	168	495	98	150	351	351	32.5
80	020	188	505	120	175	351	351	38
100	030	220	545	140	185	358	358	54

Combinazione materiali standard – Standard materials Combination

ITEM	DENOMINAZIONE DENOMINATION	A/316 MATERIALE MATERIAL	316/316 MATERIALE MATERIAL
01	Body	Forged steel ASTM A105N	Stainless steel AISI316 UNI EN10088
02	Lateral	Forged steel ASTM A105N	Stainless steel AISI316 UNI EN10088
03	Stem	Stainless steel AISI316 UNI EN10088	Stainless steel AISI316 UNI EN10088
04	Ball	Stainless steel AISI316/304 UNI EN10088	Stainless steel AISI316 UNI EN10088
05	Seat	PTFE	PTFE
06	Lever and gland nut	Galvanized Steel 8.8 EN20898-1	Galvanized Steel 8.8 EN20898-1
07	Socket springs	Galvanized Steel	Galvanized Steel

Nota: Combinazioni materiali non standard a richiesta
Note: Non standard materials combinations on request

	PN6 – NP6				PN10 – NP10				PN16 – NP16				ANSI150				ANSI300			
DN	D	K	f	Holes No. f	D	K	f	Holes No. f	D	K	f	Holes No. f	D	K	f	Holes No. f	D	K	f	Holes No. f
15	80	55	11	4	95	65	14	4	95	65	14	4	88.9	60	16	4	95	67	16	4
20	90	65	11	4	105	75	14	4	105	75	14	4	98.4	70	16	4	117	83	19	4
25	100	75	11	4	115	85	14	4	115	85	14	4	108	79	16	4	124	89	19	4
32	120	90	14	4	140	100	18	4	140	100	18	4	118	89	16	4	133	98	19	4
40	130	100	14	4	150	110	18	4	150	110	18	4	127	98	16	4	156	114	22	4
50	140	110	14	4	165	125	18	4	165	125	18	4	152	121	19	4	165	127	19	8
65	160	130	14	4	185	145	18	4	185	145	18	4	178	140	19	4	191	149	22	8
80	190	150	18	4	200	160	18	8	200	160	18	8	190	152	19	4	210	168	22	8
100	210	170	18	4	220	180	18	8	220	180	18	8	229	191	19	8	254	200	22	8

Valvole a sfera a tre vie a corpo piatto PN6-10DIN-16-ANSI150-ANSI300 con motore elettrico

Three ways ball valves wafer type NP6-10DIN-16-ANSI150-ANSI300 with electric motor

Tab.103L ME/PS

Conform to:
UNI EN1092
ANSI16.5

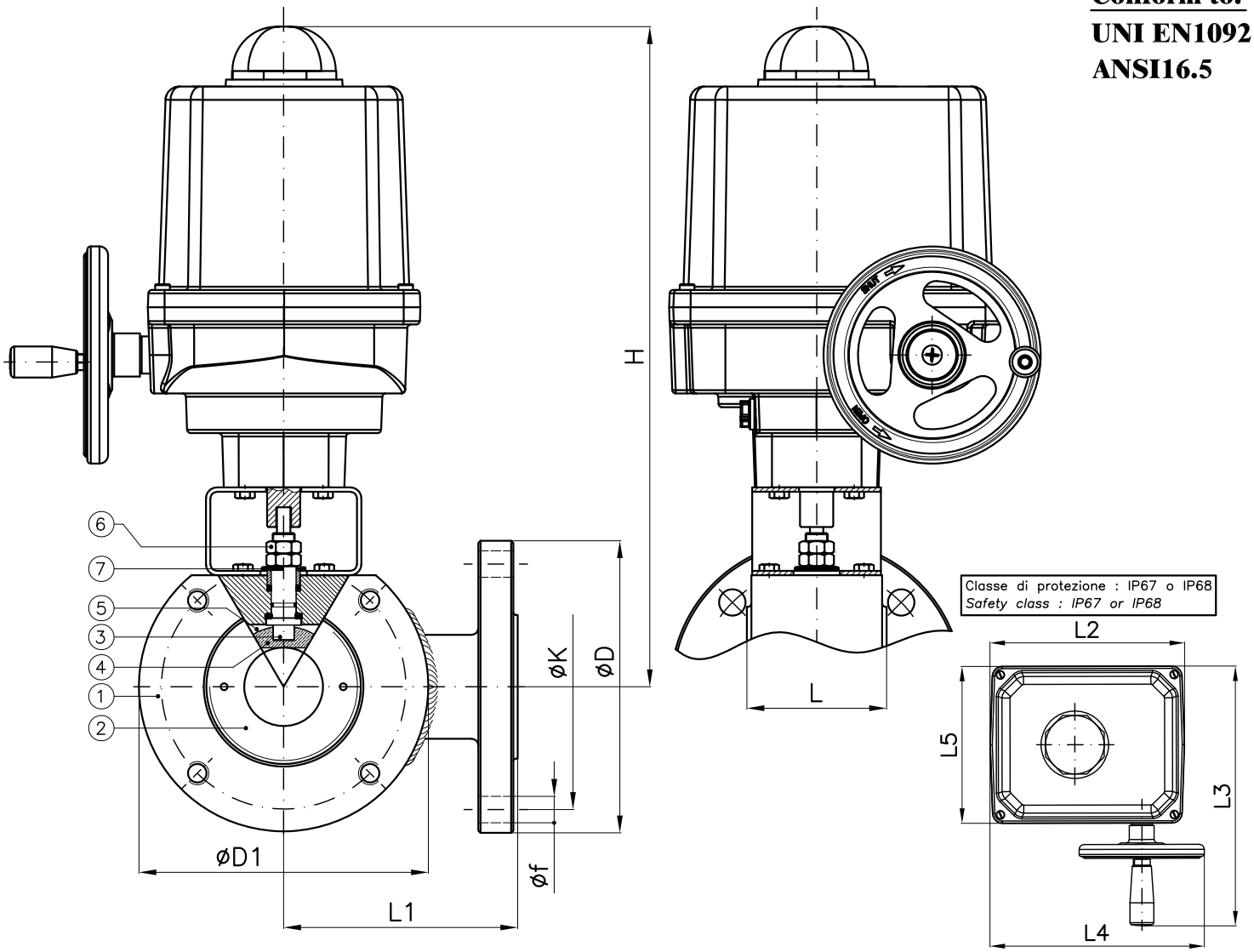

DN	Electric motor	D1	H	L	L1	L2	L3	L4	L5	Weight (Kg)
15	PSQ–E100	88	360	35	85	174	251	206	158	8
20	PSQ–E100	98	365	42	90	174	251	206	158	8.5
25	PSQ–E100	108	370	46	90	174	251	206	158	9.3
32	PSQ–E100	128	380	55	105	174	251	206	158	10.3
40	PSQ–E100	138	390	66	120	174	251	206	158	13
50	PSQ–E100	148	395	72	130	174	251	206	158	14.5
65	PSQ103	168	410	98	150	196	263	216	158	23
80	PSQ203	188	510	120	175	227	305	277	186	32
100	PSQ503	220	605	140	185	278	416	328	235	60

Combinazione materiali standard – Standard materials Combination

ITEM	DENOMINAZIONE DENOMINATION	A/316 MATERIALE MATERIAL	316/316 MATERIALE MATERIAL
01	Body	Forged steel ASTM A105N	Stainless steel AISI316 UNI EN10088
02	Lateral	Forged steel ASTM A105N	Stainless steel AISI316 UNI EN10088
03	Stem	Stainless steel AISI316 UNI EN10088	Stainless steel AISI316 UNI EN10088
04	Ball	Stainless steel AISI316/304 UNI EN10088	Stainless steel AISI316 UNI EN10088
05	Seat	PTFE	PTFE
06	Lever and gland nut	Galvanized Steel 8.8 EN20898–1	Galvanized Steel 8.8 EN20898–1
07	Socket springs	Galvanized Steel	Galvanized Steel

Nota: Combinazioni materiali non standard a richiesta
Note: Non standard materials combinations on request

	PN6 – NP6				PN10 – NP10				PN16 – NP16				ANSI150				ANSI300			
DN	D	K	f	Holes No. f	D	K	f	Holes No. f	D	K	f	Holes No. f	D	K	f	Holes No. f	D	K	f	Holes No. f
15	80	55	11	4	95	65	14	4	95	65	14	4	88.9	60	16	4	95	67	16	4
20	90	65	11	4	105	75	14	4	105	75	14	4	98.4	70	16	4	117	83	19	4
25	100	75	11	4	115	85	14	4	115	85	14	4	108	79	16	4	124	89	19	4
32	120	90	14	4	140	100	18	4	140	100	18	4	118	89	16	4	133	98	19	4
40	130	100	14	4	150	110	18	4	150	110	18	4	127	98	16	4	156	114	22	4
50	140	110	14	4	165	125	18	4	165	125	18	4	152	121	19	4	165	127	19	8
65	160	130	14	4	185	145	18	4	185	145	18	4	178	140	19	4	191	149	22	8
80	190	150	18	4	200	160	18	8	200	160	18	8	190	152	19	4	210	168	22	8
100	210	170	18	4	220	180	18	8	220	180	18	8	229	191	19	8	254	200	22	8

Valvole a sfera a tre vie a corpo piatto PN6-10DIN-16-ANSI150-ANSI300 con motore elettrico

Three ways ball valves wafer type NP6-10DIN-16-ANSI150-ANSI300 with electric motor

Tab.103L
ME/VAL

Conform to:
UNI EN1092
ANSI16.5

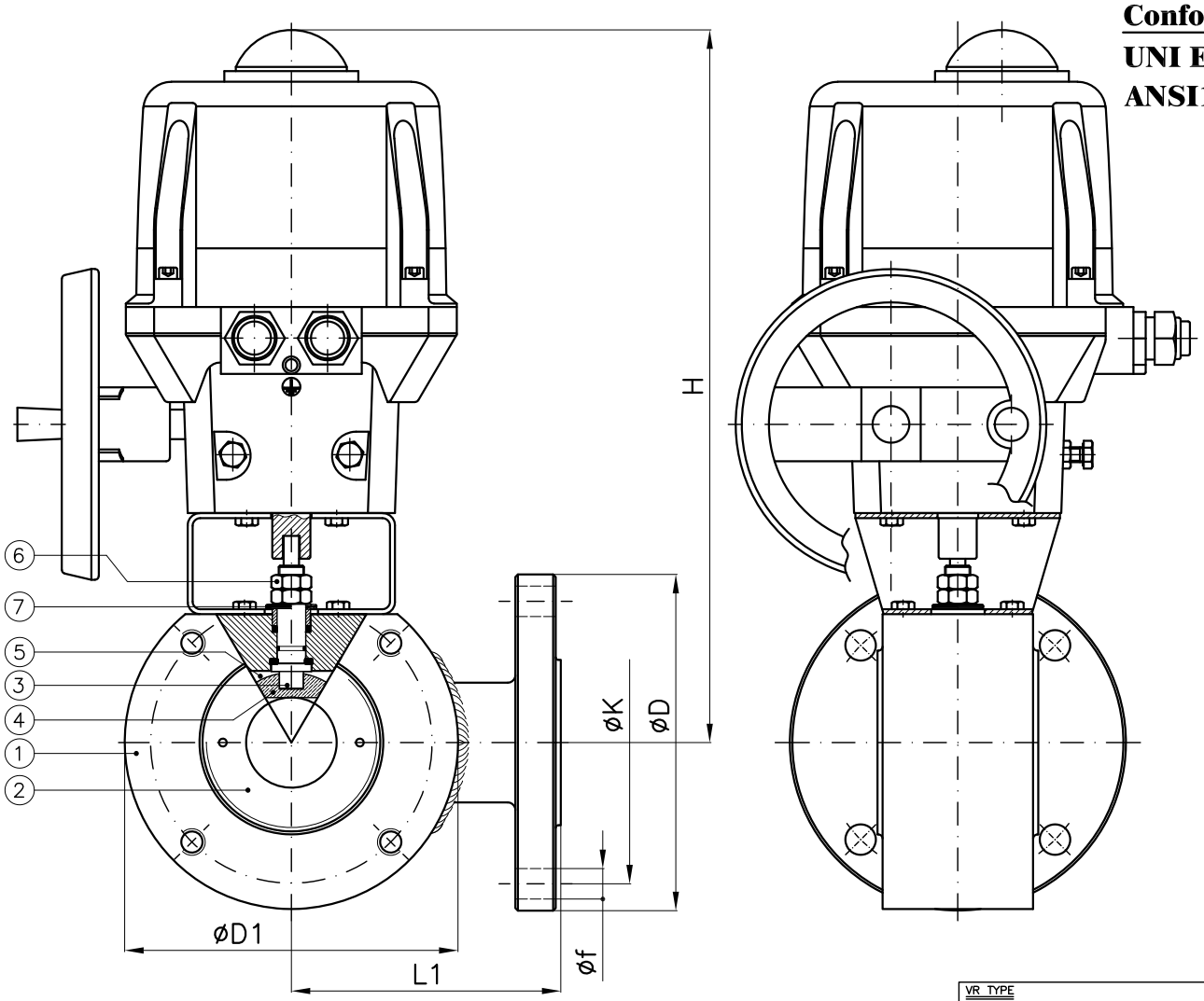

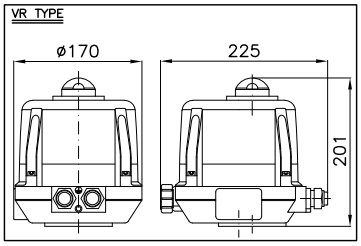

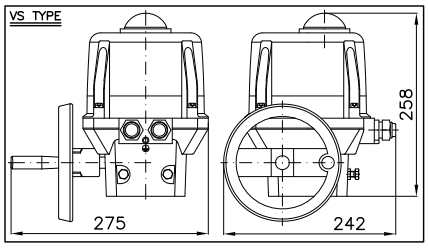

DN	Electric motor	D1	H	L	L1	Weight (Kg)
15	VR25	88	292	35	85	5.5
20	VR25	98	298	42	90	6
25	VR45	108	303	46	90	6.5
32	VR75	128	312	55	105	7.5
40	VR75	138	321	66	120	10.5
50	VR75	148	325	72	130	13
65	VS150	168	397	98	150	22
80	VS150	188	409	120	175	26.5
100	VS300	220	443	140	185	37

Combinazione materiali standard – Standard materials Combination

ITEM	DENOMINAZIONE DENOMINATION	A/316 MATERIALE MATERIAL	316/316 MATERIALE MATERIAL
01	Body	Forged steel ASTM A105N	Stainless steel AISI316 UNI EN10088
02	Lateral	Forged steel ASTM A105N	Stainless steel AISI316 UNI EN10088
03	Stem	Stainless steel AISI316 UNI EN10088	Stainless steel AISI316 UNI EN10088
04	Ball	Stainless steel AISI316/304 UNI EN10088	Stainless steel AISI316 UNI EN10088
05	Seat	PTFE	PTFE
06	Lever and gland nut	Galvanized Steel 8.8 EN20898-1	Galvanized Steel 8.8 EN20898-1
07	Socket springs	Galvanized Steel	Galvanized Steel

Nota: Combinazioni materiali non standard a richiesta
Note: Non standard materials combinations on request

	PN6 – NP6				PN10 – NP10				PN16 – NP16				ANSI150				ANSI300			
DN	D	K	f	Holes No. f	D	K	f	Holes No. f	D	K	f	Holes No. f	D	K	f	Holes No. f	D	K	f	Holes No. f
15	80	55	11	4	95	65	14	4	95	65	14	4	88.9	60	16	4	95	67	16	4
20	90	65	11	4	105	75	14	4	105	75	14	4	98.4	70	16	4	117	83	19	4
25	100	75	11	4	115	85	14	4	115	85	14	4	108	79	16	4	124	89	19	4
32	120	90	14	4	140	100	18	4	140	100	18	4	118	89	16	4	133	98	19	4
40	130	100	14	4	150	110	18	4	150	110	18	4	127	98	16	4	156	114	22	4
50	140	110	14	4	165	125	18	4	165	125	18	4	152	121	19	4	165	127	19	8
65	160	130	14	4	185	145	18	4	185	145	18	4	178	140	19	4	191	149	22	8
80	190	150	18	4	200	160	18	8	200	160	18	8	190	152	19	4	210	168	22	8
100	210	170	18	4	220	180	18	8	220	180	18	8	229	191	19	8	254	200	22	8

Valvole a sfera filettate a tre vie tipo a "L" o "T" in acciaio inox AISI316
Three way threaded ball valves type "L" or "T" stainless steel AISI316

Art.2058

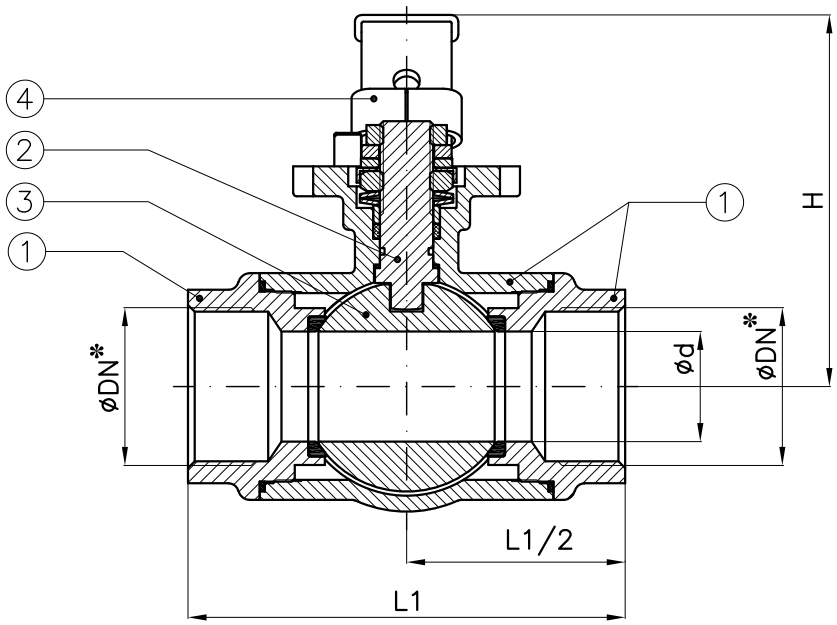

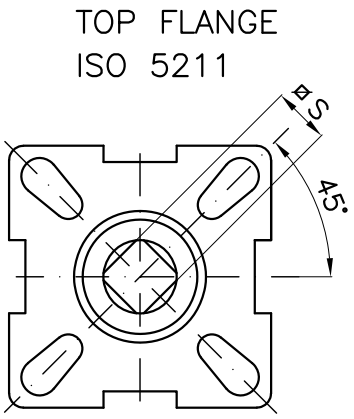

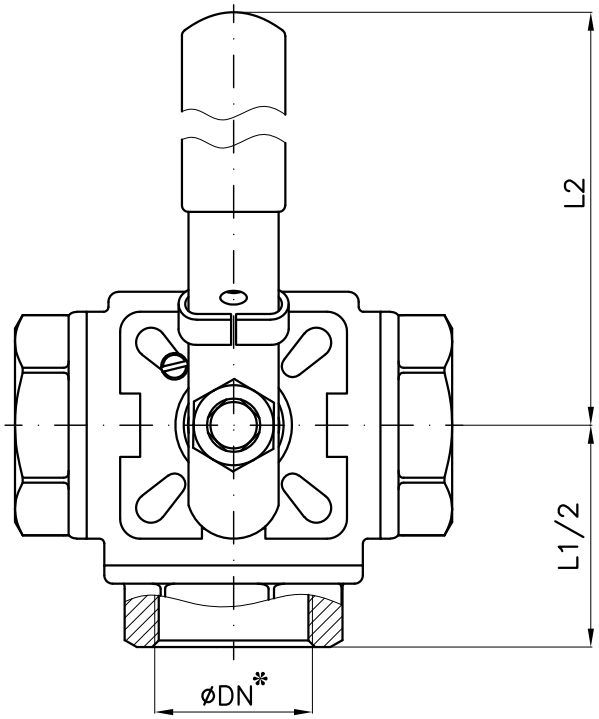

*: Filettatura GAS
*: *BSPP threaded*

DN	d	H	L1	L2	⌀S
1/4"	9.5	66	75	130	9
3/8"	11	66	75	130	9
1/2"	12	66	75	130	9
3/4"	15	72.5	85	161	11
1"	20	77	100	161	11
1"1/4	25	92	122	203	14
1"1/2	32	96	131	203	14
2"	40	107	158	203	14

Combinazione materiali standard – Standard materials Combination		
		CF8M/316
ITEM	DENOMINAZIONE DENOMINATION	MATERIALE MATERIAL
01	Body	Stainless steel CF8M ASTM A351
02	Stem	Stainless steel AISI316 UNI EN10088
03	Ball	Stainless steel AISI316 UNI EN10088
04	Locker	Stainless steel AISI304 UNI EN10088

Nota: Combinazioni materiali non standard a richiesta
Note: Non standard materials combinations on request

Valvole a sfera a tre vie
Ball valves three way

Art.MG40

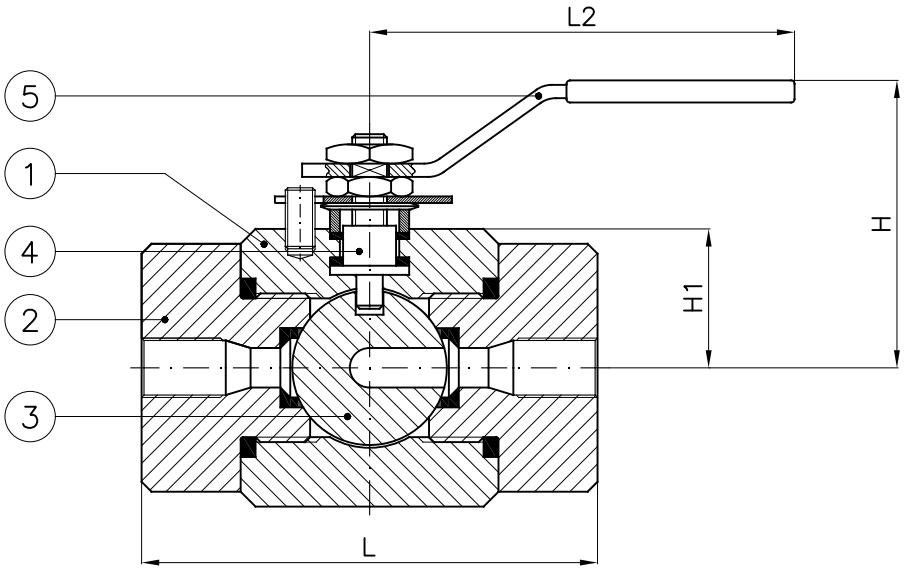

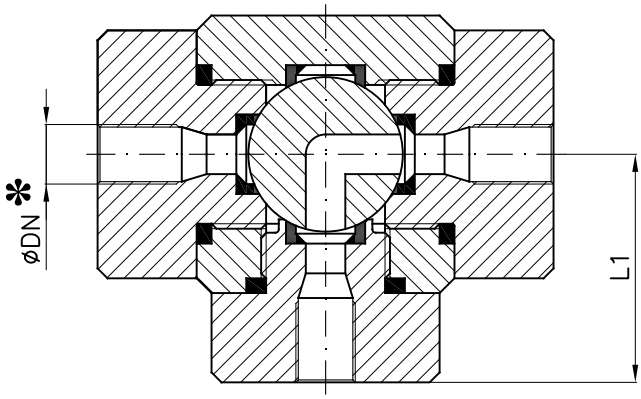

✻: Filettatura GAS
✻: *BSPP threaded*

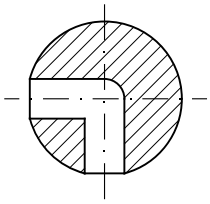

SFERA/BALL "L"

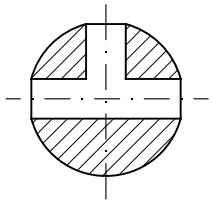

SFERA/BALL "T"

DN	H	H1	L	L1	L2	Weight (Kg)
1/2"	63	22.5	75	37.5	150	2.1
3/4"	63	22.5	75	37.5	150	2.9
1"	85	30	90	45	150	4.6
1"1/4	90	35	102	51	185	5.9
1"1/2	95	40	120	60	185	9.9
2"	100	45	135	67.5	285	16

Combinazione materiali standard – Standard materials Combination			
		A/316	316/316
ITEM	DENOMINAZIONE DENOMINATION	MATERIALE MATERIAL	MATERIALE MATERIAL
01	Body	Forged steel ASTM A105N	Stainless steel AISI316 UNI EN10088
02	Closure	Forged steel ASTM A105N	Stainless steel AISI316 UNI EN10088
03	Ball	Stainless steel AISI316 UNI EN10088	Stainless steel AISI316 UNI EN10088
04	Stem	Stainless steel AISI316 UNI EN10088	Stainless steel AISI316 UNI EN10088
05	Lever	Galvanized steel	Galvanized steel

Nota: Combinazioni materiali non standard a richiesta
Note: Non standard materials combinations on request

Valvole a sfera a tre vie a corpo piatto PN6-10DIN-16-ANSI150-ANSI300 con motore elettrico

Three ways ball valves wafer type NP6-10DIN-16-ANSI150-ANSI300 with electric motor

Tab.103L
ME/BER

Conform to:
UNI EN1092
ANSI16.5

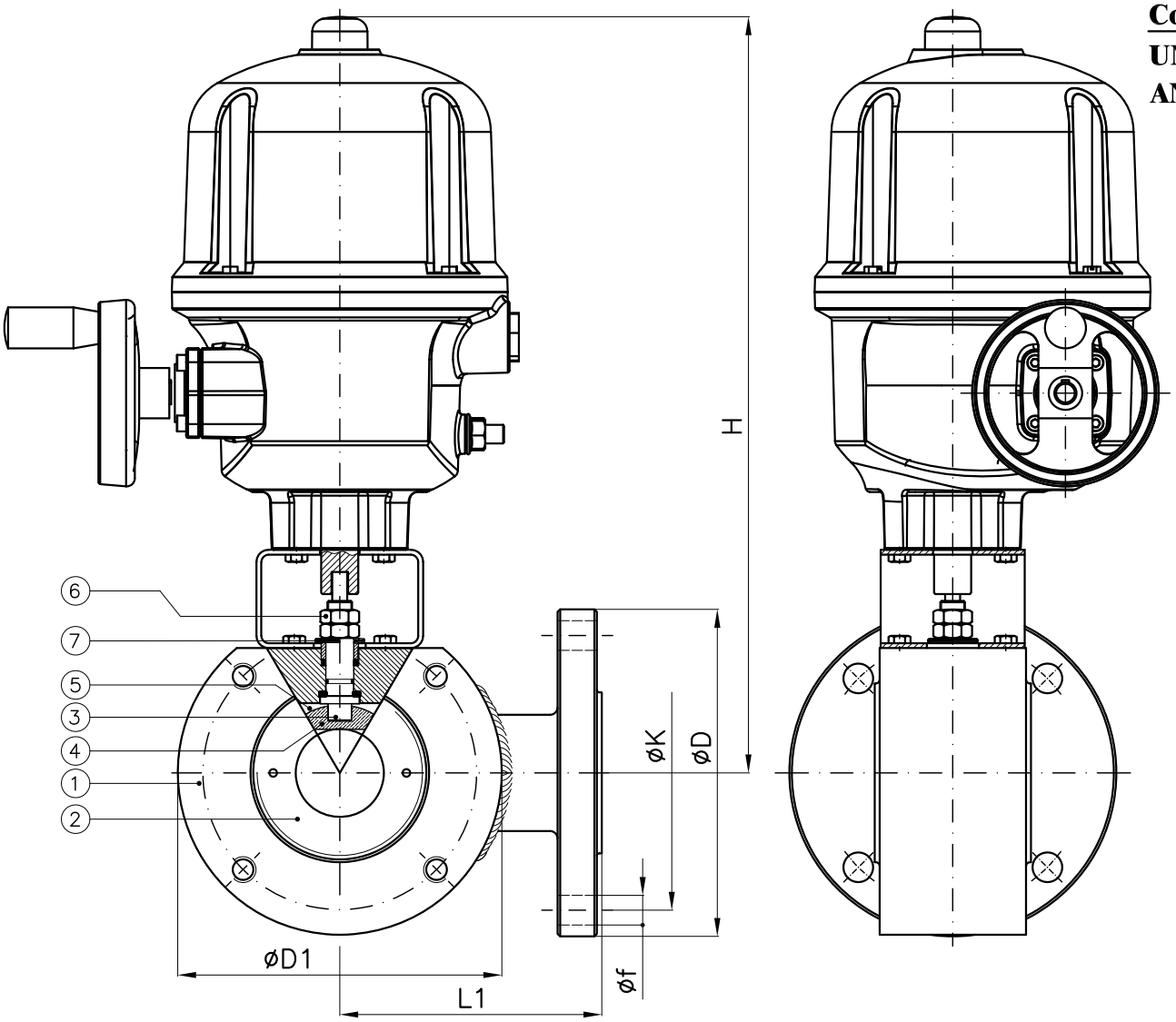

DN	Electric motor	D1	H	L	L1	Weight (Kg)
15	AQ5	88	380	35	85	12
20	AQ5	98	385	42	90	12.5
25	AQ5	108	390	46	90	13
32	AQ5	128	400	55	105	14
40	AQ5	138	410	66	120	17
50	AQ10	148	415	72	130	19
65	AQ15	168	425	98	150	26
80	AQ15	188	440	120	175	31
100	AQ25	220	505	140	185	44

Combinazione materiali standard – Standard materials Combination

ITEM	DENOMINAZIONE DENOMINATION	A/316 MATERIALE MATERIAL	316/316 MATERIALE MATERIAL
01	Body	Forged steel ASTM A105N	Stainless steel AISI316 UNI EN10088
02	Lateral	Forged steel ASTM A105N	Stainless steel AISI316 UNI EN10088
03	Stem	Stainless steel AISI316 UNI EN10088	Stainless steel AISI316 UNI EN10088
04	Ball	Stainless steel AISI316/304 UNI EN10088	Stainless steel AISI316 UNI EN10088
05	Seat	PTFE	PTFE
06	Lever and gland nut	Galvanized Steel 8.8 EN20898-1	Galvanized Steel 8.8 EN20898-1
07	Socket springs	Galvanized Steel	Galvanized Steel

Nota: Combinazioni materiali non standard a richiesta
Note: Non standard materials combinations on request

	A	B	C	E	øD1
AQ5/10/15	286	184	276	225	100
AQ25	317	224	365	315	100

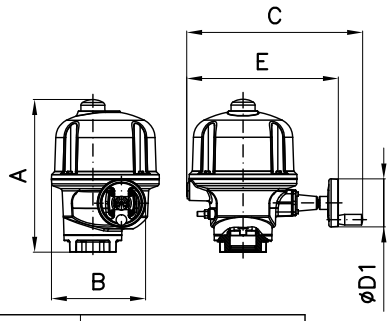

	PN6 – NP6				PN10 – NP10				PN16 – NP16				ANSI150				ANSI300			
DN	D	K	f	Holes No. f	D	K	f	Holes No. f	D	K	f	Holes No. f	D	K	f	Holes No. f	D	K	f	Holes No. f
15	80	55	11	4	95	65	14	4	95	65	14	4	88.9	60	16	4	95	67	16	4
20	90	65	11	4	105	75	14	4	105	75	14	4	98.4	70	16	4	117	83	19	4
25	100	75	11	4	115	85	14	4	115	85	14	4	108	79	16	4	124	89	19	4
32	120	90	14	4	140	100	18	4	140	100	18	4	118	89	16	4	133	98	19	4
40	130	100	14	4	150	110	18	4	150	110	18	4	127	98	16	4	156	114	22	4
50	140	110	14	4	165	125	18	4	165	125	18	4	152	121	19	4	165	127	19	8
65	160	130	14	4	185	145	18	4	185	145	18	4	178	140	19	4	191	149	22	8
80	190	150	18	4	200	160	18	8	200	160	18	8	190	152	19	4	210	168	22	8
100	210	170	18	4	220	180	18	8	220	180	18	8	229	191	19	8	254	200	22	8

Valvole a sfera filettate a tre vie tipo a "L" o "T" in acciaio inox AISI316 lucchettabile

Three way threaded ball valves type "L" or "T" stainless steel AISI316 with locking lever

Art.2058G

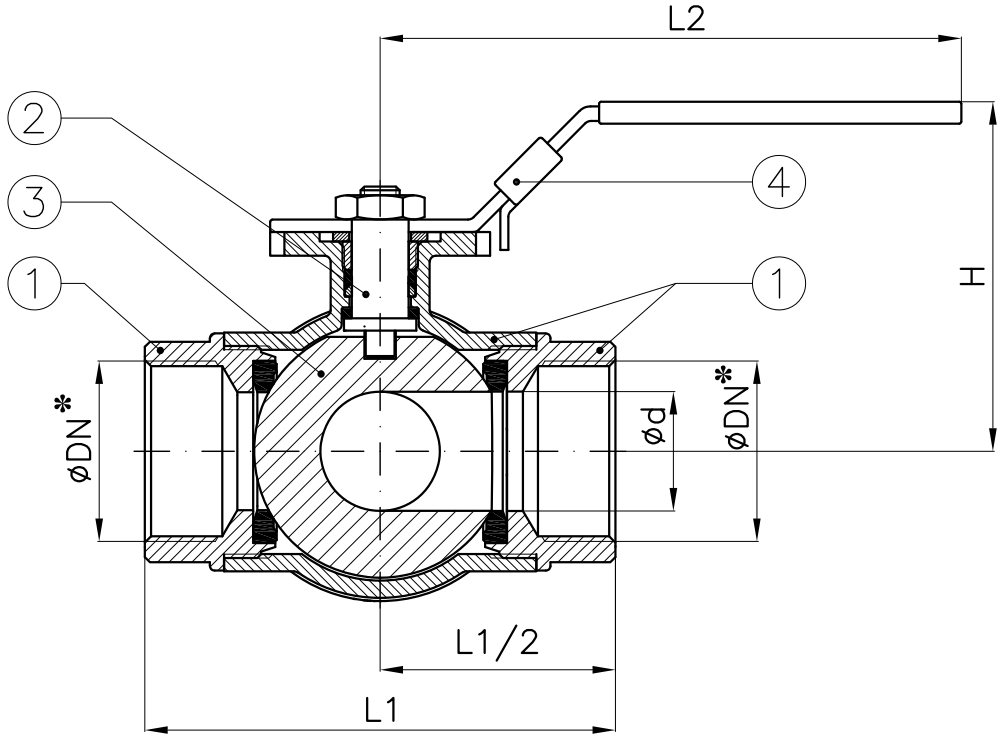

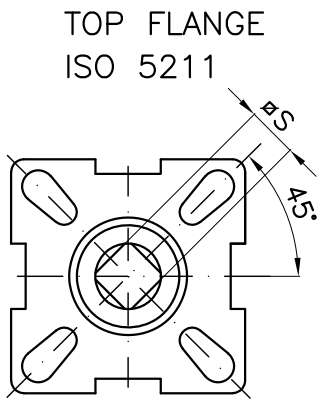

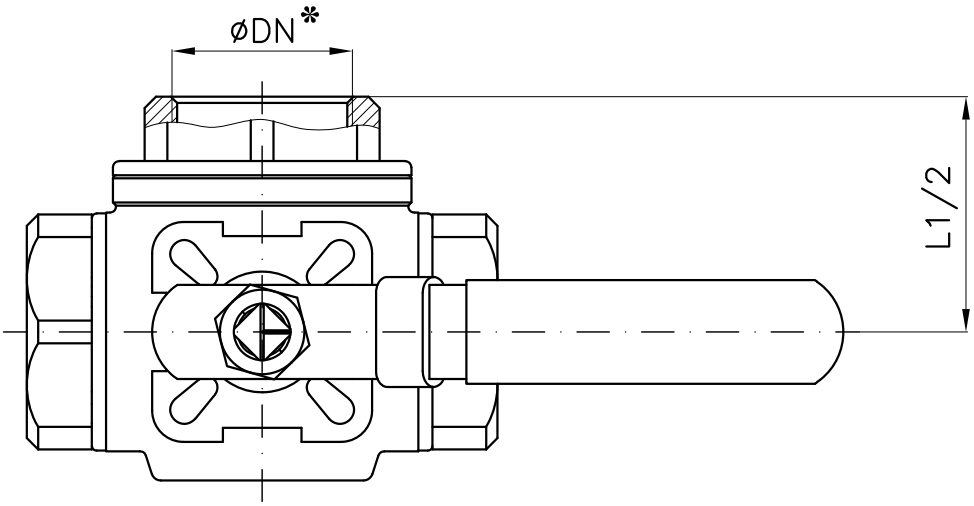

*: Filettatura GAS

*: *BSPP threaded*

DN	d	H	L1 (~)	L2	⌀S
1/2"	12.7	67	76	140	9
3/4"	16	72	87	140	9
1"	20	85	102	162	11
1"1/4	25	89	117	162	11
1"1/2	32	97	127	189	14
2"	38	106	149	189	14

Combinazione materiali standard – Standard materials Combination		
		CF8M/316
ITEM	DENOMINAZIONE DENOMINATION	MATERIALE MATERIAL
01	Body	Stainless steel CF8M ASTM A351
02	Stem	Stainless steel AISI316 UNI EN10088
03	Ball	Stainless steel AISI316 UNI EN10088
04	Locker	Stainless steel AISI316 UNI EN10088

Nota: Combinazioni materiali non standard a richiesta

Note: Non standard materials combinations on request

www.medanaevisca.it

Valvole a farfalla tipo Wafer PN6 - PN10DIN - PN16 - ANSI150
Butterfly valves Wafer type NP6 - NP10DIN - NP16 - ANSI150

Tab.203.1

Conform to:

API STD 609
MSS SP 67
ANSI B16.5
ANSI B16.34
DIN3202
ISO 5752
UNI EN 1092

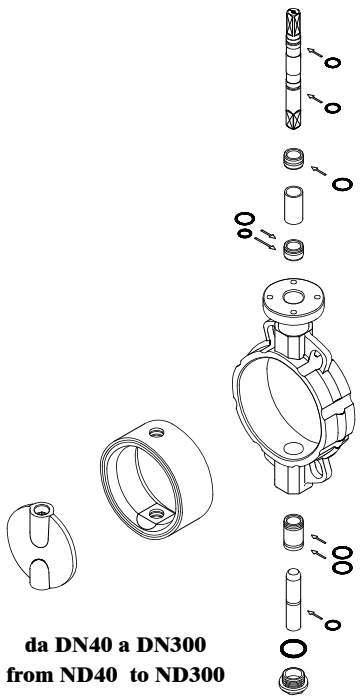

da DN40 a DN300
from ND40 to ND300

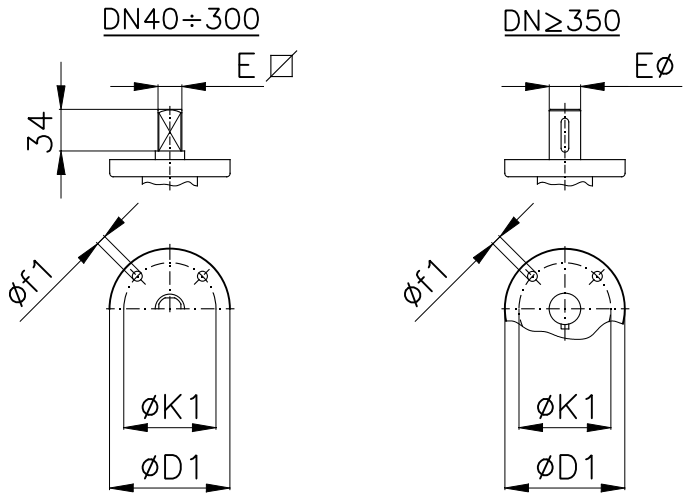

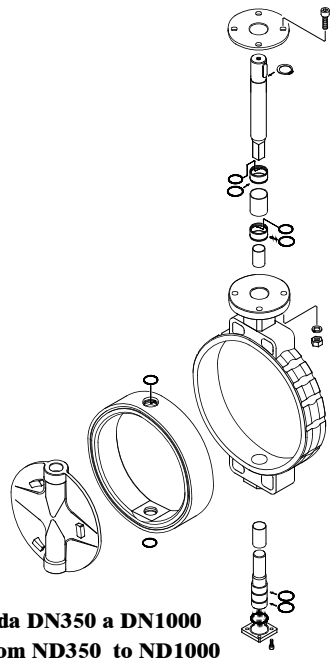

da DN350 a DN1000
from ND350 to ND1000

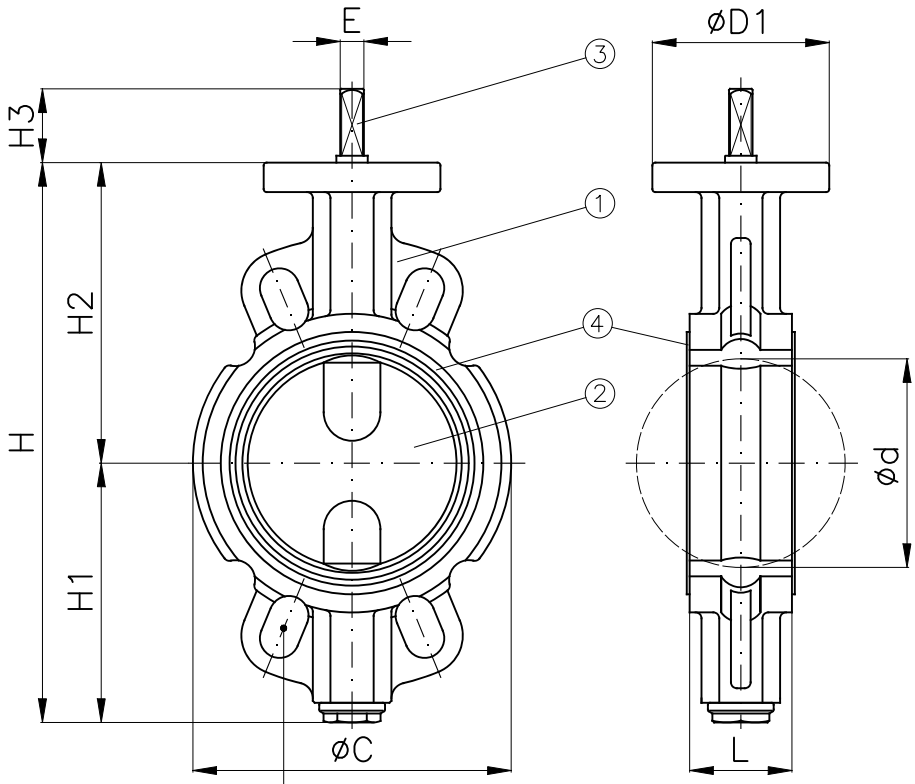

per installazione flange PN6–10DIN–16–ANSI150

for installation NP6–10DIN–16–ANSI150 flanges

Attuatore idraulico
Hydraulic actuator

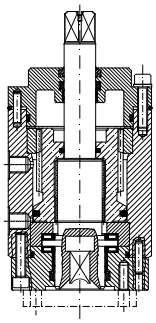

Attuatore pneumatico
Pneumatic actuator

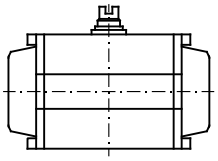

Riduttore a ingranaggi
Reduction gear

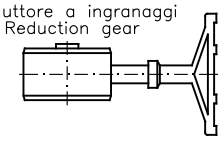

Attuatore elettrico
Electrical actuator

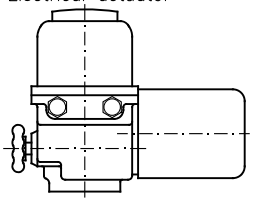

Leva
Lever

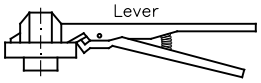

Valvole a farfalla tipo Wafer PN6 - PN10DIN - PN16 - ANSI150
Butterfly valves Wafer type NP6 - NP10DIN - NP16 - ANSI150

Tab.203.1

Pos.	Descrizione *Description*	Materiali	Materials
1	Corpo *Body*	Acciaio FeG45VR Acciaio inox CF8M Bronzo Alluminio Ghisa Sferoidale GGG40 Alluminio	*Cast Steel FeG45VR* *Stainless Steel CF8M* *Aluminium Bronze* *Nodular Cast Iron GGG40* *Aluminium*
2	Disco *Disc*	Acciaio FeG45VR Acciaio inox CF8M Bronzo Alluminio Ghisa Sferoidale GGG40	*Cast Steel FeG45VR* *Stainless Steel CF8M* *Aluminium Bronze* *Nodular Cast Iron GGG40*
3	Stelo *Stem*	Acciaio inox AISI 316 Acciaio inox AISI 416	*Stainless Steel AISI 316* *Stainless Steel AISI 416*
4	Sede di tenuta *Disc seat ring*	Buna N Silicone EPDM Hypalon Viton PTFE	*Buna N Silicone* *EPDM Hypalon* *Viton PTFE*

campo di applicazione e caratteristiche delle sedi di tenuta in elastomero
application and characteristics for elastomer seats

DENOMINAZIONE COMMERCIALE *COMMERCIAL NAME*	DENOMINAZIONE TECNICA *TECHNICAL NAME*	CAMPO DI APPLICAZIONE *GENERAL APPLICATION*	LIMITI TEMPERATURA *TEMPERATURE LIMITS*	NON USARE PER: *NOT RECOMMENDED FOR:*
BUNA N (NBR)	Copolimero di butadiene e acrilonitrile ad alto tenore *Copolymer of butadiene and high acrylonitrile*	Idrocarburi con meno del 40% di aromatici, gas naturale, aria, H_2O, H_2O mare, salamoia, alcoli, glicoli. *Hydrocarbons with less than 40% of aromatics, natural gas, air, H_2O, sea water, brine, alcohols, glycols.*	−20°C −4°F +100°C +212°F	– SOLVENTI / *SOLVENTS* – BENZENE / *BENZENE* – XILOLO / *XYLENE*
ETILENE PROPILENE *ETHYLENE PROPILENE* (EPDM)	Termopolimero di etilene e propilene *Termopolymer of ethylene and propylene*	H_2O, vapore, H_2O mare, salamoia, sostanze abrasive, fosfati, esteri, chetoni, alcali composti alimentari, liquidi e solidi, acidi inorganici a bassa concentrazione, soda caustica. *H_2O, steam, air, brine, abrasives, phosphates, esters, ketones, alkali, food compounds, liquids and solids, dilute inorganic acids, caustic soda.*	−35°C −31°F +120°C +248°F	– IDROCARBURI / *HYDROCARBONS* – OLII / *OILS* – GRASSI / *FATS* – ARIA SECCA / *DRY AIR*
ETILENE PROPILENE ALTA TEMP. *ETHYLENE PROPILENE HIGH TEMP.* (EPDM H.T.)	Termopolimero di etilene e propilene *Termopolymer of ethylene and propylene*	H_2O, vapore, H_2O mare, salamoia, sostanze abrasive, fosfati, esteri, chetoni, alcali composti alimentari, liquidi e solidi, acidi inorganici a bassa concentrazione, soda caustica. *H_2O, steam, air, brine, abrasives, phosphates, esters, ketones, alkali, food compounds, liquids and solids, dilute inorganic acids, caustic soda.*	−35°C −31°F +150°C +302°F	– IDROCARBURI / *HYDROCARBONS* – OLII / *OILS* – GRASSI / *FATS* – ARIA SECCA / *DRY AIR*
HYPALON (CSM)	Clorosulfonato di polietilene *Chlorosylphonated polyethylene*	Acidi ossidanti, acido cromico, acido fluoridrico, acidi a base di zolfo, ipocloriti di sodio, ozono. *Oxidizing acids, chromic acid, hydrofluoric acid, sulphur based acids, sodium hypoclorite, ozone.*	−18°C 0°F +100°C +212°F	– VAPORE / *STEAM* – CHETONI / *KETONES* – ARIA CALDA / *HOT AIR* – ACIDO NITRICO / *NITRIC ACID*
SILICONE (Q)	Metil vinile siliconica *Methylvinyl silicone*	Bevande – Alimentari *Beverages – Foodstuffs*	−30°C −22°F +150°C +302°F	– IDROCARBURI / *HYDROCARBONS* – SOLVENTI / *SOLVENTS* – VAPORE / *STEAM*
VITON (FPM)	Copolimero esafluoropropilene viniliden fluoruro *Copolymer of exafluoro propylene fluoro vinyldene*	Idrocarburi ad alta concentrazione di aromaticita',acidi minerali e alogenati, acido fosforico, eteri aromatici ed alifatici. *Hydrocarbons with high concentration of aromatics, mineral and halogenated acids, phosforic acid, aliphatic and aromatic ethers.*	−10°C −14°F +160°C +320°F	– VAPORE / *STEAM* – CHETONI / *KETONES* – AMMINE / *AMINES* – ESTERI / *ESTERS* – ALCALI / *ALKALI*
NEOPRENE (CR)	Policloroprene *Polichloroprene*	Olii, acidi minerali diluiti, alcali, grassi. *Oils, diluite mineral acids, alkali, fats.*	−18°C 0°F +90°C +194°F	– CHETONI / *KETONES* – ACIDI CONCENTRATI/*CONCENTRATED ACIDS* – VAPORE / *STEAM*
GOMMA NATURALE NATURAL RUBBER (NR)	Lattice (vegetale) *Latex (vegetable)*	Prodotti abrasivi *Abrasive products*	−35°C −31°F +65°C +149°F	– SOLVENTI PER VERNICI/*SOLVENTS FOR PAINT* – IDROCARBURI / *HYDROCARBONS* – OLII / *OILS*
TEFLON (P.T.F.E.)	Politetrafluoro etilene *Polytetrafluoro ethylene*	Prodotti corrosivi – Solventi *Corrosive products – Solvents*	−40°C −40°F +180°C +356°F	– PRODOTTI ABRASIVI/*ABRASIVE PRODUCTS* – FLUORO ALLO STATO GASSOSO/*FLUORINE GASEOUS* – METALLI ALCALINI ALLO STATO FUSO/*ALKALINE METALS*

ATTACCO ISO 5211

DN		C	d	E⌀	E⌀	H	H1	H2	H3	L	Weight (Kg)	D1	K1	f1	Holes NO. f1	
40	1"1/2	90	45.9	12	–	188	90	98	41	33	2.2	90	70	8.5	4	F07
50	2"	103	56.6	12	–	205	96	109	41	43	2.9	90	70	8.5	4	
65	2"1/2	122	70.5	12	–	230	108	122	41	46	3.9	90	70	8.5	4	
80	3"	140	83.3	12	–	250	118	132	41	46	4.2	90	70	8.5	4	
100	4"	162	105	12	–	285	132	153	41	52	5	90	70	8.5	4	
125	5"	200	127.7	16	–	327	150	177	41	56	7.4	90	70	8.5	4	
150	6"	220	152.2	16	–	359	165	194	41	56	8.5	90	70	8.5	4	
200	8"	270	197.6	16	–	419	194	225	41	60	11.8	90	70	8.5	4	
250	10"	328	245.9	18	–	495	220	275	41	68	18.5	125	102	11	4	F10
300	12"	392	298.2	24	–	559	262	297	41	78	29.8	125	102	11	4	
350	14"	436	332	–	44.5	632	281	351	60	78	50	175	140	17	4	F14
400	16"	483	380	–	44.5	681	305.5	375.5	60	102	70	175	140	17	4	
450	18"	540	432	–	44.5	749	349	400	60	114	90	175	140	17	4	
500	20"	580	483	–	44.5	798	373	425	60	127	110	175	140	17	4	
600	24"	710	591.5	–	63	936	445	491	90	153	210	210	165	22	4	F16
700	28"	792	680	–	75	1120	540	580	90	165	250	300	254	17	8	F25
800	32"	925	790	–	75	1242	612	630	90	190	355	360	254	17	8	F25
1000	40"	1135	975	–	95	1500	740	760	120	216	575	415	298	22	8	F30

Valvole a farfalla tipo Wafer PN6 - PN10DIN - PN16 - ANSI150 con attuatore idraulico doppio effetto

Butterfly valves Wafer type NP6 - NP10DIN - NP16 - ANSI150 with hydraulic double acting actuator

Tab.203.1
Hydr/DA

Conform to:

API STD 609
MSS SP 67
ANSI B16.5
ANSI B16.34
DIN3202
ISO 5752
UNI EN 1092

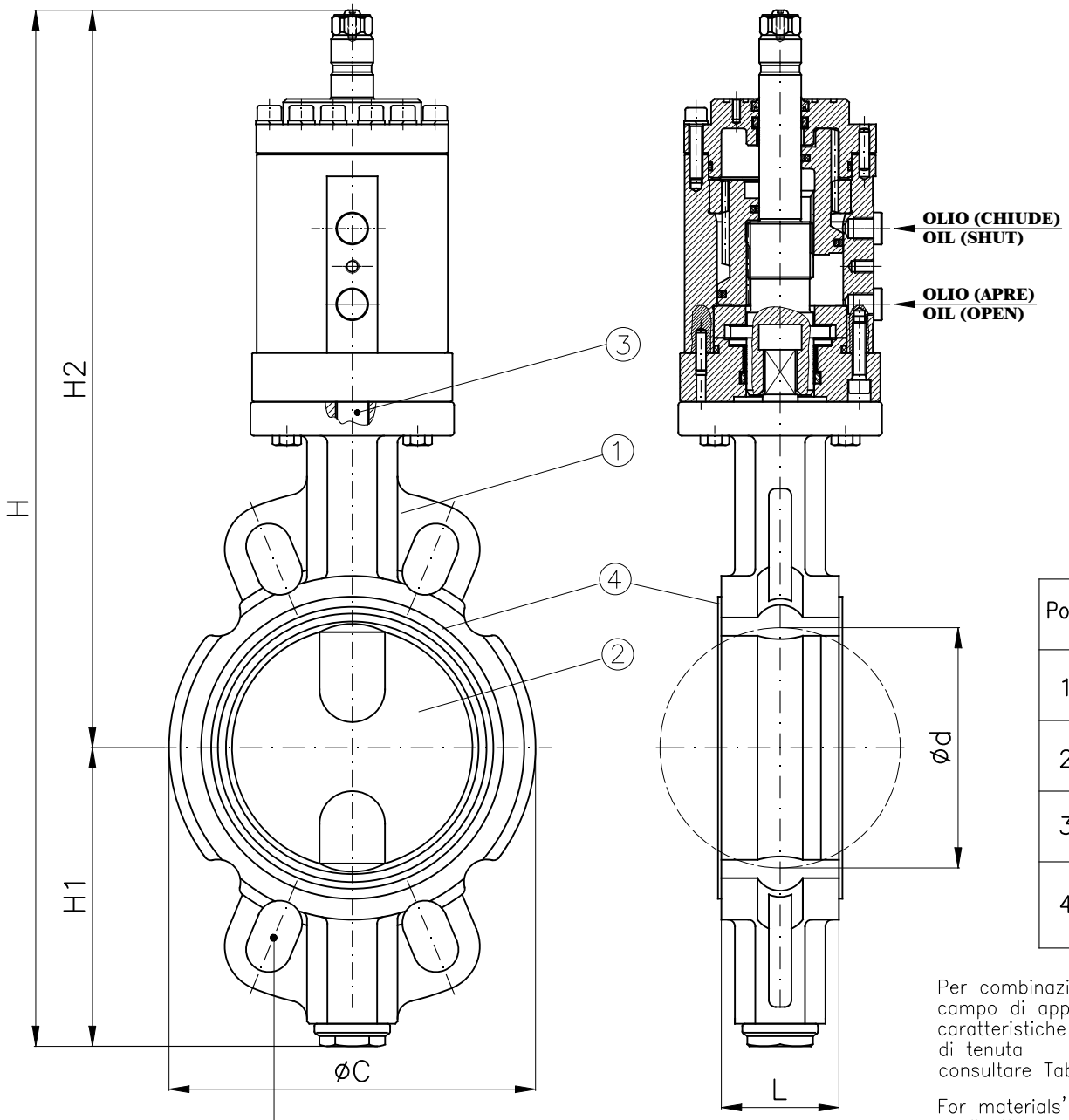

per installazione flange PN6–10DIN–16–ANSI150

for installation NP6–10DIN–16–ANSI150 flanges

Pos.	Descrizione *Description*
1	Corpo *Body*
2	Disco *Disc*
3	Stelo *Stem*
4	Sede di tenuta *Disc seat ring*

Per combinazioni materiali, campo di applicazione, caratteristiche delle sedi di tenuta consultare Tab.203.1

For materials' combination, application range and seats' characteristics consult Tab.203.1

Attuatore rotante a doppio effetto

Le taglie degli attuatori devono essere verificate in funzione della pressione di esercizio della valvola e della pressione dell'olio del circuito idraulico.

Double acting rotary actuator

The size of the actuator must be checked on the strength of the working pressure of the valve and on the strength of the oil pressure inside the hydraulic circuit.

DN		ATTUATORE *ACTUATOR*	C	d	H	H1	H2	L	Weight (Kg)
40	1"1/2	ARL10 (RL.14)	90	45.9	395	90	305	33	9
50	2"	ARL10 (RL.14)	103	56.6	410	96	314	43	9
65	2"1/2	ARL10 (RL.14)	122	70.5	435	108	327	46	10
80	3"	ARL10 (RL.14)	140	83.3	455	118	337	46	10
100	4"	ARL10 (RL.14)	162	105	490	132	358	52	11
125	5"	ARL20 (RL.16)	200	127.7	545	150	395	56	16
150	6"	ARL20 (RL.16)	220	152.2	580	165	415	56	17
200	8"	ARL45 (RL.26)	270	197.6	650	194	456	60	23.5
250	10"	ARL45 (RL.26)	328	245.9	730	220	510	68	31
300	12"	ARL75 (RL.32)	392	298.2	815	262	553	78	49
350	14"	ARL110 (RL.36)	436	332	925	281	644	78	79
400	16"	ARL110 (RL.36)	483	380	970	305.5	664.5	102	99
450	18"	ARL200 (RL.44)	540	432	1090	349	741	114	125
500	20"	ARL320 (RL.52)	580	483	1170	373	797	127	190
600	24"	ARL600 (RL.60)	710	591.5	1375	445	930	153	335
700	28"	ARL600 (RL.60)	792	680	1560	540	1020	165	375
800	32"	ARL1000 (RL.67)	925	790	1755	612	1143	190	535
1000	40"	ARL1000 (RL.67)	1135	975	2015	740	1275	216	760

Valvole a farfalla tipo Wafer PN6 - PN10DIN - PN16 - ANSI150 con attuatore idraulico singolo effetto

Butterfly valves Wafer type NP6 - NP10DIN - NP16 - ANSI150 with hydraulic single acting actuator

Tab.203.1

Hydr/SR

Conform to:

API STD 609
MSS SP 67
ANSI B16.5
ANSI B16.34
DIN3202
ISO 5752
UNI EN 1092

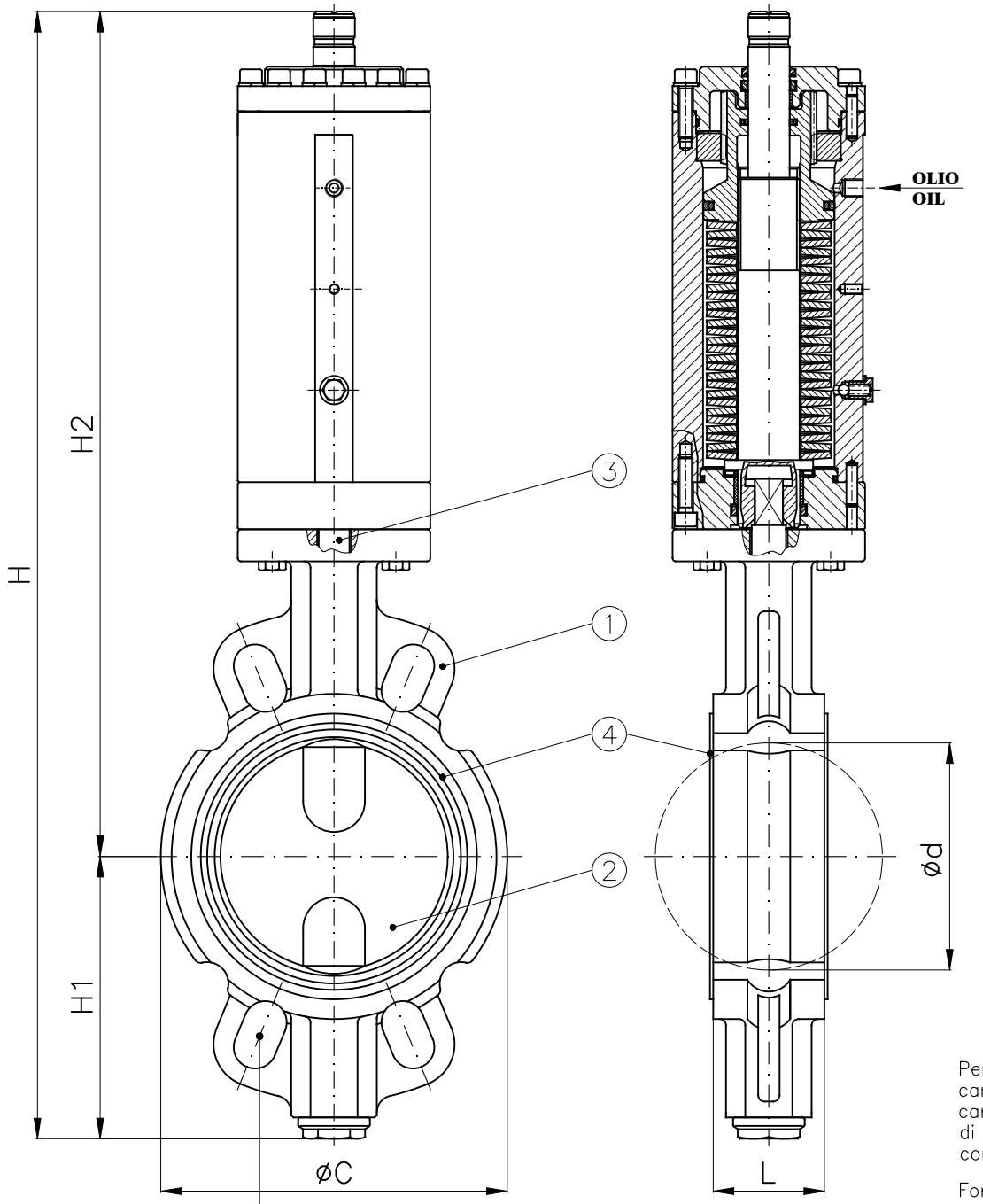

Pos.	Descrizione *Description*
1	Corpo *Body*
2	Disco *Disc*
3	Stelo *Stem*
4	Sede di tenuta *Disc seat ring*

Per combinazioni materiali, campo di applicazione, caratteristiche delle sedi di tenuta consultare Tab.203.1

For materials' combination, application range and seats' characteristics consult Tab.203.1

per installazione flange PN6–10DIN–16–ANSI150

for installation NP6–10DIN–16–ANSI150 flanges

Attuatore rotante a singolo effetto con ritorno a molla

Single acting rotary actuator (spring return)

Le taglie degli attuatori devono essere verificate in funzione della pressione di esercizio della valvola e della pressione dell'olio del circuito idraulico.

The size of the actuator must be checked on the strength of the working pressure of the valve and on the strength of the oil pressure inside the hydraulic circuit.

DN		ATTUATORE *ACTUATOR*	C	d	H	H1	H2	L	Weight (Kg)
40	1"1/2	H927 (RS.10)	90	45.9	510	90	420	33	15.5
50	2"	H927 (RS.10)	103	56.6	525	96	429	43	16
65	2"1/2	H927 (RS.10)	122	70.5	550	108	442	46	17
80	3"	H927 (RS.10)	140	83.3	570	118	452	46	17.5
100	4"	H927 (RS.10)	162	105	605	132	473	52	18
125	5"	H929 (RS.13)	200	127.7	705	150	555	56	24
150	6"	H929 (RS.13)	220	152.2	735	165	570	56	41.5
200	8"	H939 (RS.17)	270	197.6	1015	194	821	60	52
250	10"	H941 (RS.26)	328	245.9	1020	220	800	68	60
300	12"	H942 (RS.30)	392	298.2	1020	262	758	78	65

Conform to:

API STD 609
MSS SP 67
ANSI B16.5
ANSI B16.34
DIN3202
ISO 5752
UNI EN 1092

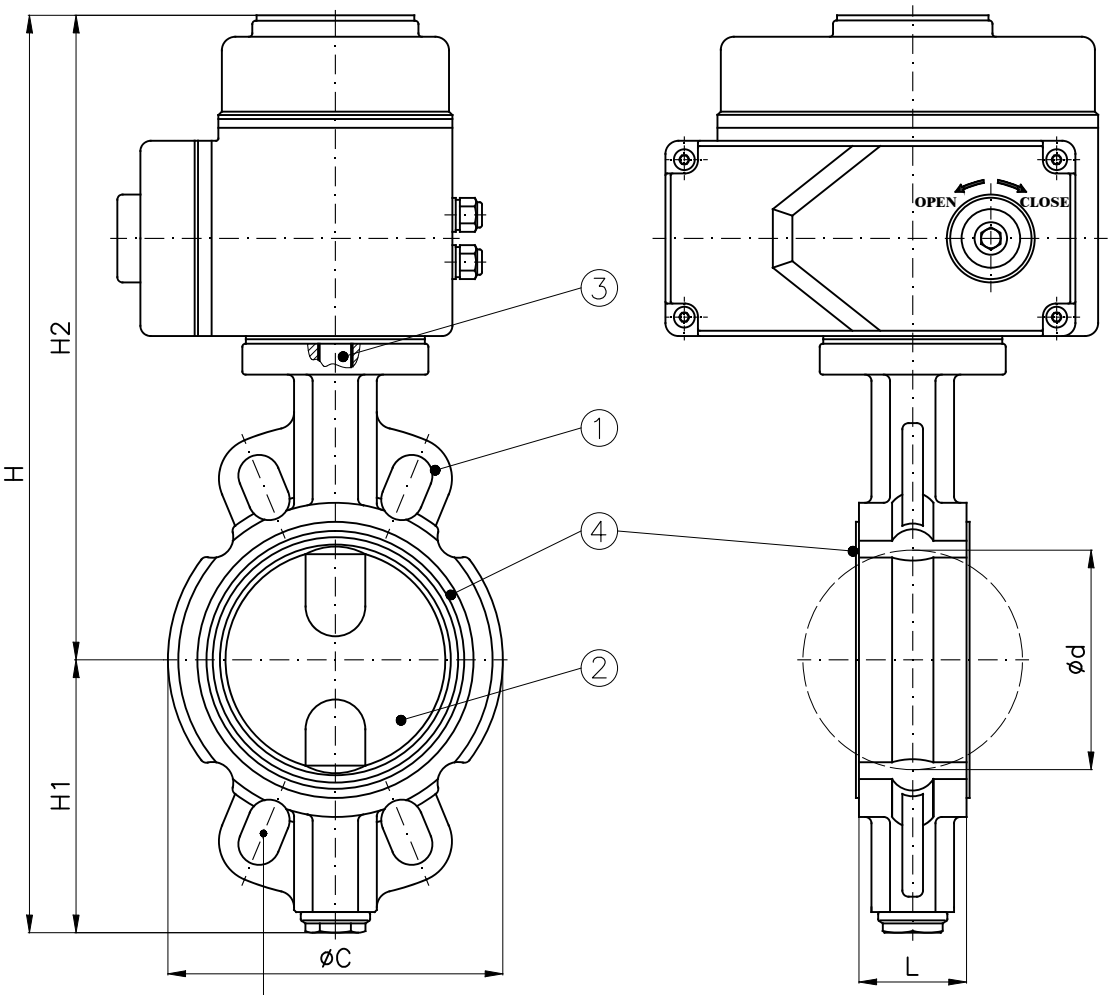

per installazione flange PN6–10DIN–16–ANSI150 (Tab.100–101)
for installation NP6–10DIN–16–ANSI150 flanges (Tab.100–101)

Pos.	Descrizione *Description*
1	Corpo *Body*
2	Disco *Disc*
3	Stelo *Stem*
4	Sede di tenuta *Disc seat ring*

ELECTRIC MOTOR

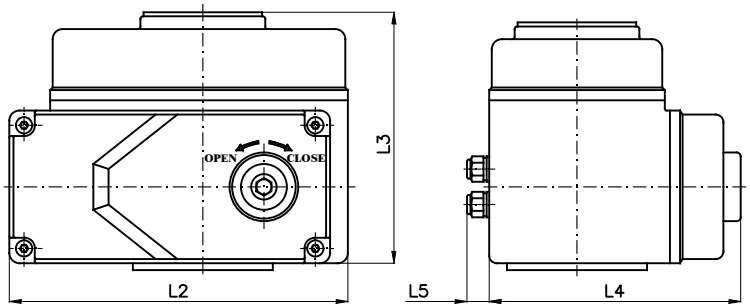

La scelta del motore dipende dalla pressione di esercizio dell'impianto
The choice of the motor depends from plant working pressure

Per combinazioni materiali, campo di applicazione, caratteristiche delle sedi di tenuta consultare Tab.203.1

For materials' combination, application range and seats' characteristics consult Tab.203.1

DN		Electric Motor	C	d	H	H1	H2	L	L2	L3	L4	L5	Weight (Kg)
40	1"1/2	AOX–005	90	45.9	310	90	220	33	160	121	121	25	5.8
50	2"	AOX–005	103	56.6	326	96	230	43	160	121	121	25	6.5
65	2"1/2	AOX–005	122	70.5	353	108	245	46	160	121	121	25	7.5
80	3"	AOX–005	140	83.3	373	118	255	46	160	121	121	25	7.8
100	4"	AOX–008	162	105	407	132	275	52	160	121	121	25	8.6
125	5"	AOX–015	200	127.7	460	150	310	56	189	129	145	25	12
150	6"	AOX–030	220	152.2	525	165	360	56	268	164	200	25	22
200	8"	AOX–040	270	197.6	584	194	390	60	268	164	200	25	25.6
250	10"	AOX–060	328	245.9	660	220	440	68	268	164	200	25	32.5
300	12"	AOX–080	392	298.2	727	262	465	78	268	164	200	25	44

Valvole a farfalla tipo wafer PN6-PN10DIN-PN16-ANSI150 con motore elettrico
Butterfly valves wafer type NP6-NP10DIN-NP16-ANSI150 with electric motor

Tab.203.1
ME/PS

Conform to:

API STD 609
MSS SP 67
ANSI B16.5
ANSI B16.34
DIN3202
ISO 5752
UNI EN 1092

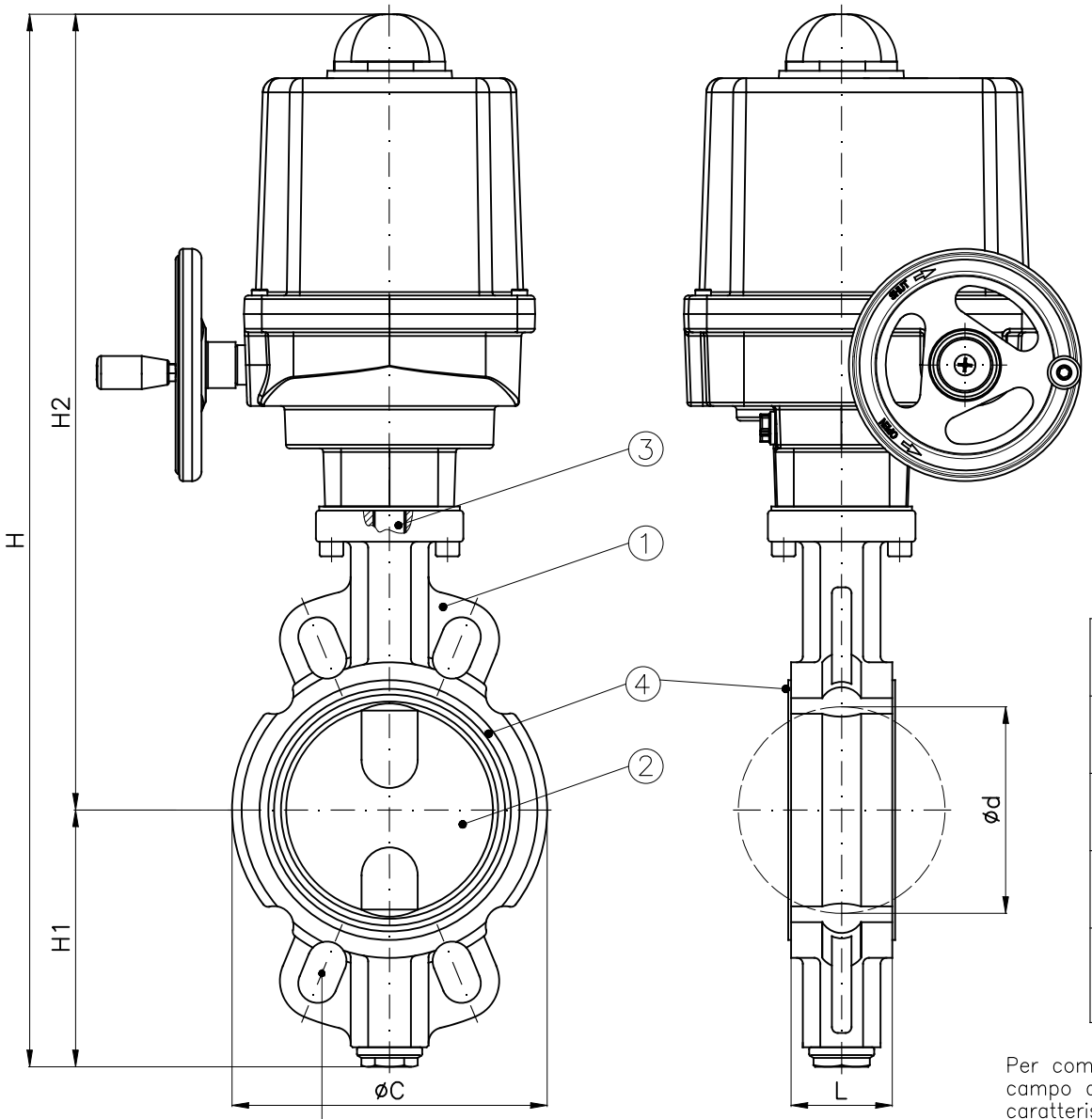

per installazione flange PN6–10DIN–16–ANSI150

for installation NP6–10DIN–16–ANSI150 flanges

Pos.	Descrizione *Description*
1	Corpo *Body*
2	Disco *Disc*
3	Stelo *Stem*
4	Sede di tenuta *Disc seat ring*

Per combinazioni materiali, campo di applicazione, caratteristiche delle sedi di tenuta consultare Tab.203.1

For materials' combination, application range and seats' characteristics consult Tab.203.1

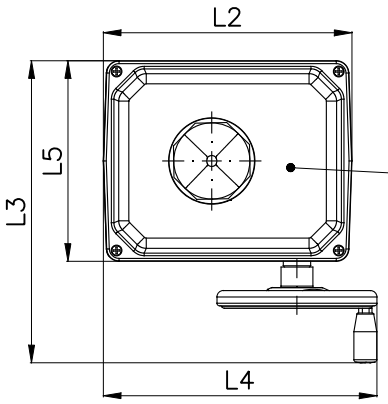

Classe di protezione : IP67 o IP68
Safety class : IP67 or IP68

DN		Electric Motor	C	d	H	H1	H2	L	L2	L3	L4	L5	Weight (Kg)
40	1"1/2	PSQ–E100	90	45.9	460	90	370	33	174	251	206	158	8.5
50	2"	PSQ–E100	103	56.6	476	96	380	43	174	251	206	158	9
65	2"1/2	PSQ–E100	122	70.5	503	108	395	46	174	251	206	158	10
80	3"	PSQ–E100	140	83.3	523	118	405	46	174	251	206	158	10.5
100	4"	PSQ103	162	105	552	132	420	52	196	263	216	158	13
125	5"	PSQ103	200	127.7	595	150	445	56	196	263	216	158	15
150	6"	PSQ203	220	152.2	720	165	555	56	227	305	277	186	20
200	8"	PSQ203	270	197.6	779	194	585	60	227	305	277	186	23
250	10"	PSQ503	328	245.9	915	220	695	68	278	416	328	235	45.5
300	12"	PSQ503	392	298.2	982	262	720	78	278	416	328	235	57

Valvole a farfalla tipo Wafer PN6 - PN10DIN - PN16 - ANSI150 con motore elettrico

Butterfly valves Wafer type NP6 - NP10DIN - NP16 - ANSI150 with electric motor

Tab.203.1
ME/VAL

Conform to:

API STD 609
MSS SP 67
ANSI B16.5
ANSI B16.34
DIN3202
ISO 5752
UNI EN 1092

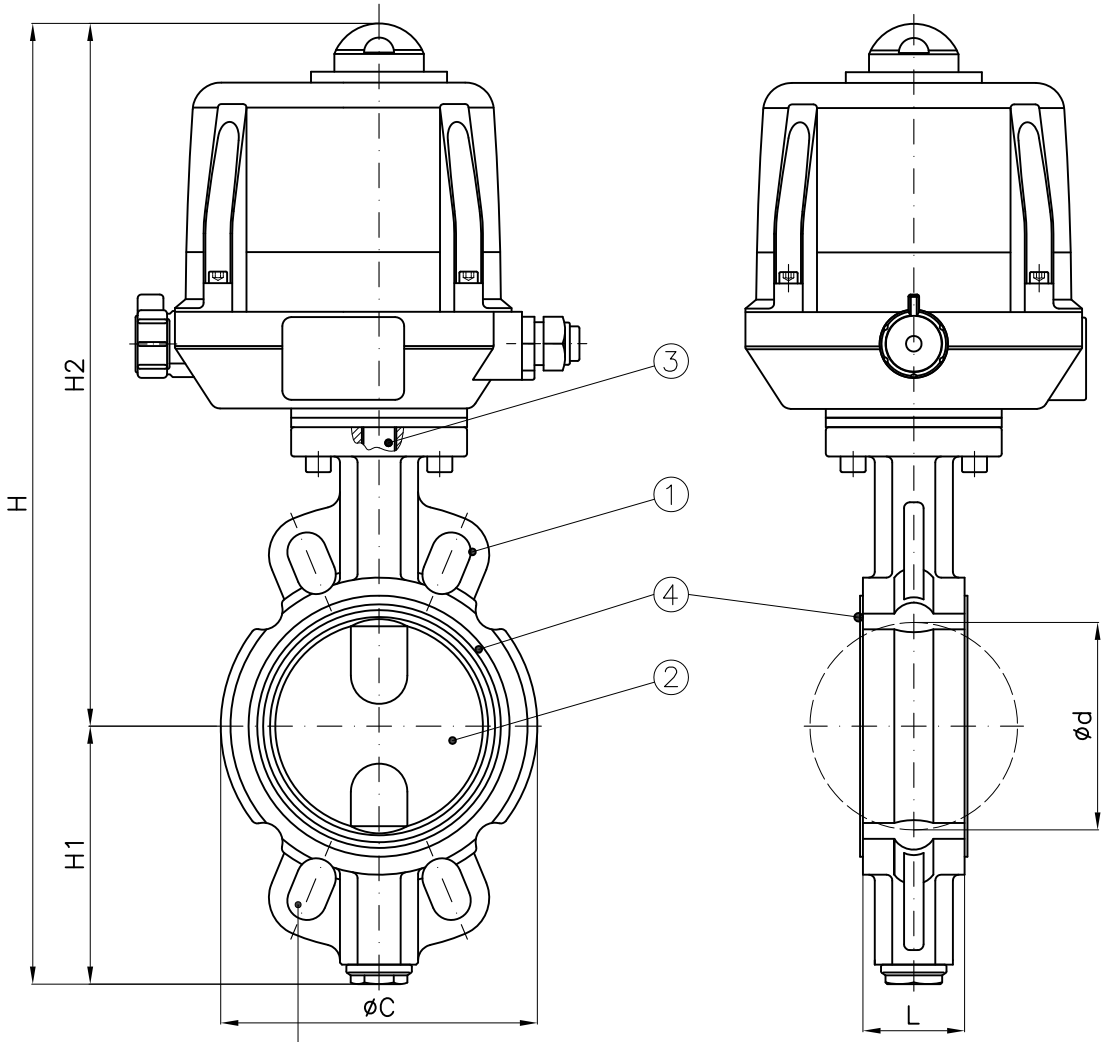

per installazione flange PN6–10DIN–16–ANSI150 (Tab.100–101)

for installation NP6–10DIN–16–ANSI150 flanges (Tab.100–101)

Pos.	Descrizione *Description*
1	Corpo *Body*
2	Disco *Disc*
3	Stelo *Stem*
4	Sede di tenuta *Disc seat ring*

DN		Electric Motor	C	d	H	H1	H2	L	Weight (Kg)
40	1"1/2	VR45	90	45.9	389	90	299	33	6
50	2"	VR45	103	56.6	406	96	310	43	6.5
65	2"1/2	VR75	122	70.5	431	108	323	46	7.5
80	3"	VS100	140	83.3	508	118	390	46	10
100	4"	VS100	162	105	543	132	411	52	11
125	5"	VS150	200	127.7	585	150	435	56	13
150	6"	VS150	220	152.2	617	165	452	56	14
200	8"	VS300	270	197.6	677	194	483	60	17.5
250	10"	VT600	328	245.9	801	220	581	68	39.5
300	12"	VT1000	392	298.2	865	262	603	78	51

Per combinazioni materiali, campo di applicazione, caratteristiche delle sedi di tenuta consultare Tab.203.1

For materials' combination, application range and seats' characteristics consult Tab.203.1

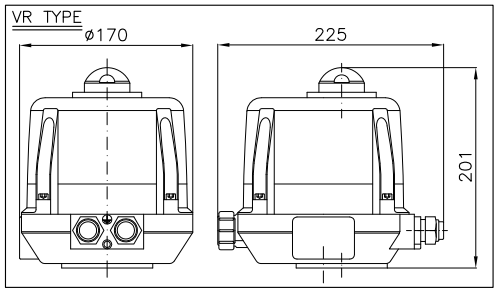

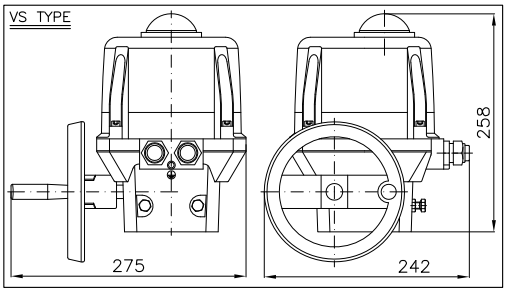

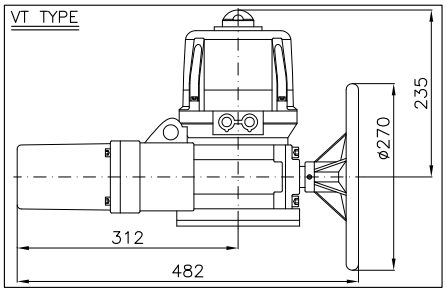

Conform to:

API STD 609
MSS SP 67
ANSI B16.5
ANSI B16.34
DIN3202
ISO 5752
UNI EN 1092

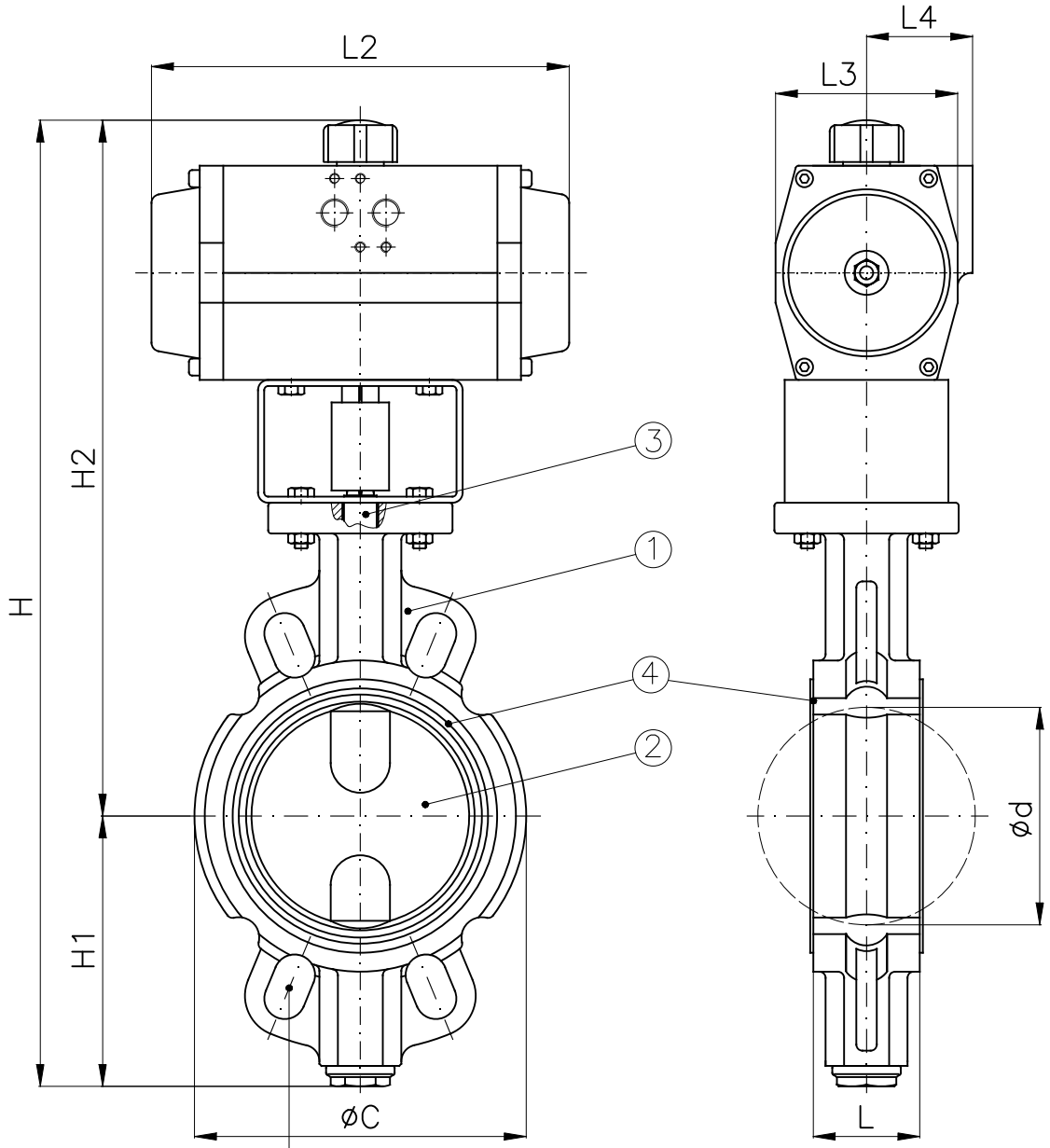

per installazione flange PN6–10DIN–16–ANSI150

for installation NP6–10DIN–16–ANSI150 flanges

DA: DOUBLE ACTING SR: SIMPLE ACTING (spring return)

DN		Pneumatic Actuator	C	d	H	H1	H2	L	L2	L3	L4	Weight (Kg)
40	1"1/2	AP2 DA	90	45.9	356	90	266	33	155	73	44.5	4.5
		AP2 SR										5
50	2"	AP2 DA	103	56.6	373	96	277	43	155	73	44.5	5.5
		AP3 SR			390		294		213	85	49.5	7
65	2"1/2	AP3 DA	122	70.5	415	108	307	46	213	85	49.5	8
		AP4 SR			440		332		276	110	58	11
80	3"	AP3 DA	140	83.3	435	118	317	46	213	85	49.5	8.5
		AP4 SR			460		342		276	110	58	11.5
100	4"	AP3.5 DA	162	105	480	132	348	52	236	98	53	10.5
		AP4.5 SR			522		390		310	128	69	16
125	5"	AP4 DA	200	127.7	537	150	387	56	276	110	58	14.5
		AP5 SR			577		427		366	140	–	21.5
150	6"	AP4.5 DA	220	152.2	596	165	431	56	310	128	–	18.5
		AP5.5 SR			650		485		388	160		29
200	8"	AP5 DA	270	197.6	669	194	475	60	366	140	–	24.5
		AP6 SR			734		540		468	175		38
250	10"	AP5.5 DA	328	245.9	786	220	566	68	388	160	–	43
		AP8 SR			880		660		563	215		75
300	12"	AP6 DA	392	298.2	874	262	612	78	468	175	–	53
		AP8 SR			944		682		563	215		87

Pos.	Descrizione *Description*
1	Corpo *Body*
2	Disco *Disc*
3	Stelo *Stem*
4	Sede di tenuta *Disc seat ring*

Per combinazioni materiali, campo di applicazione, caratteristiche delle sedi di tenuta consultare Tab.203.1

For materials' combination, application range and seats' characteristics consult Tab.203.1

Conform to:

API STD 609
MSS SP 67
ANSI B16.5
ANSI B16.34
DIN3202
ISO 5752
UNI EN 1092

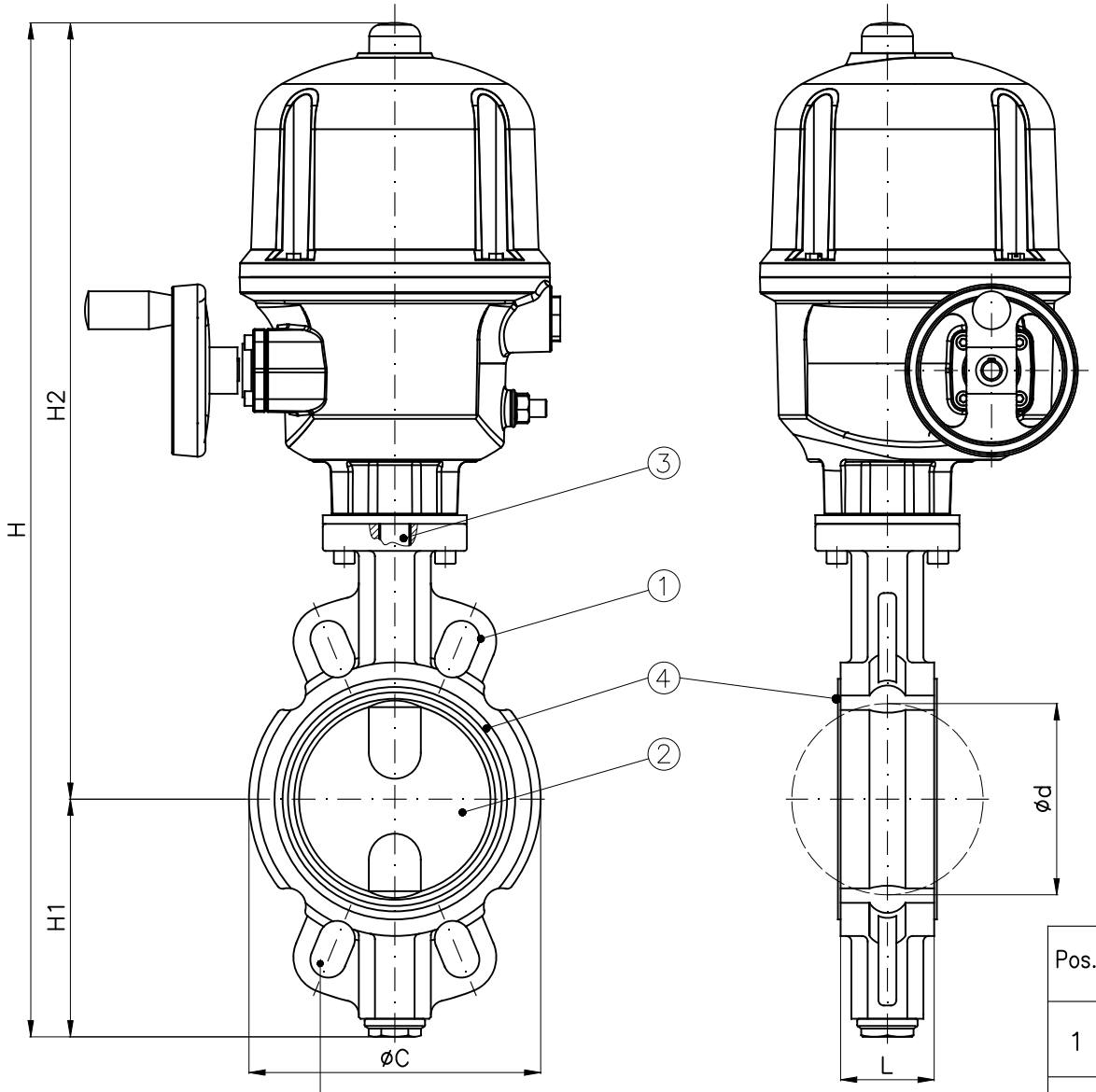

per installazione flange PN6–10DIN–16–ANSI150 (Tab.100–101)
for installation NP6–10DIN–16–ANSI150 flanges (Tab.100–101)

Pos.	Descrizione *Description*
1	Corpo *Body*
2	Disco *Disc*
3	Stelo *Stem*
4	Sede di tenuta *Disc seat ring*

DN		Electric Motor	C	d	H	H1	H2	L	Weight (Kg)
40	1"1/2	AQ5	90	45.9	474	90	384	33	12.5
50	2"	AQ5	103	56.6	491	96	395	43	13
65	2"1/2	AQ10	122	70.5	516	108	408	46	14
80	3"	AQ10	140	83.3	536	118	418	46	14.5
100	4"	AQ10	162	105	571	132	439	52	15
125	5"	AQ15	200	127.7	613	150	463	56	17.5
150	6"	AQ15	220	152.2	645	165	480	56	18.5
200	8"	AQ30	270	197.6	747	194	553	60	27
250	10"	AQ50	328	245.9	823	220	603	68	33.5

Per combinazioni materiali, campo di applicazione, caratteristiche delle sedi di tenuta consultare Tab.203.1

For materials' combination, application range and seats' characteristics consult Tab.203.1

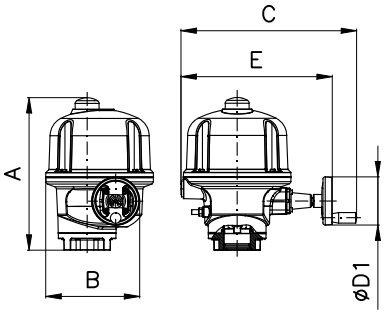

	A	B	C	E	ØD1
AQ5/10/15	286	184	276	225	100
AQ30	328	260	427	347	160
AQ50	328	260	427	347	200

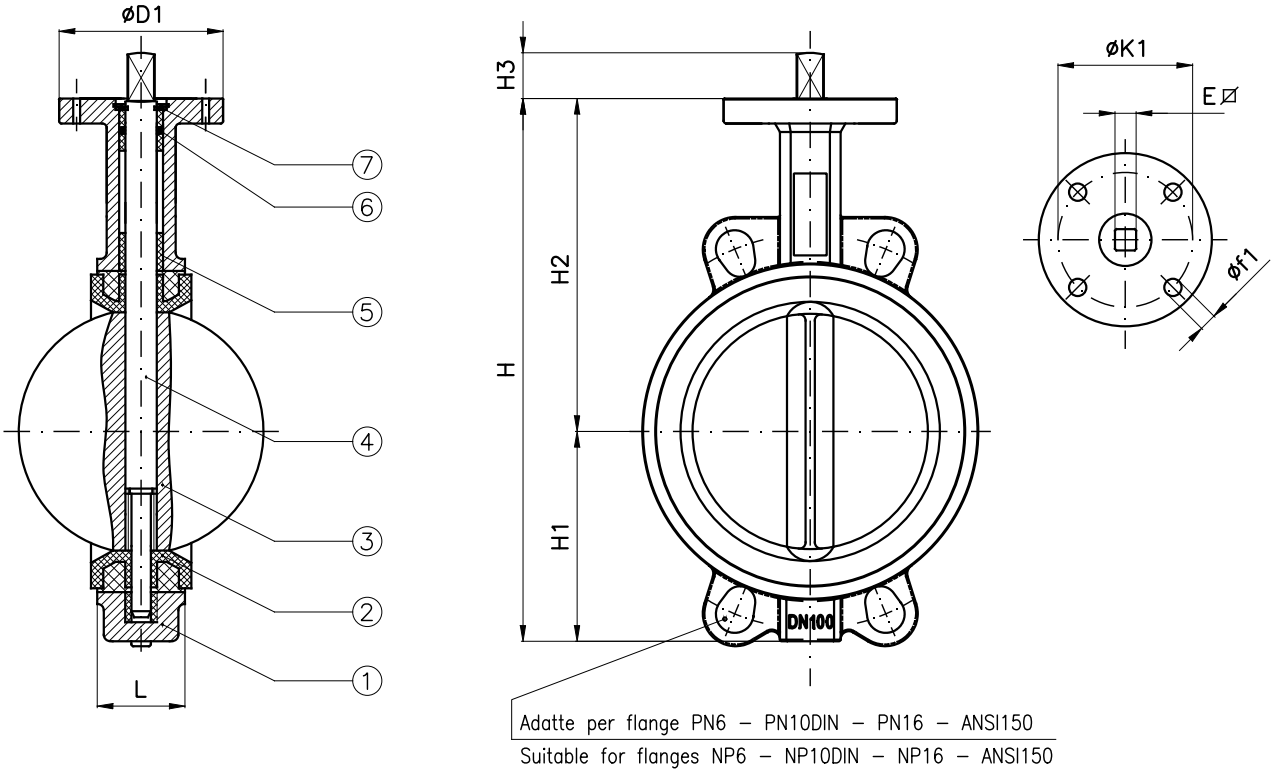

- Working pressure: 6/10/16bar.
- F to F DIM.ACC.to EN 558-1 SERIES20.
- Top-Flange ACC.to ISO5211.
- Fitting between flanges: DIN PN6/10/16/ANSI150.

DN	H	H1	H2	H3	L	D1	K1	f1	Holes NO. f1	E⌀	Top Flange
40	179	63	116	32	33	65	50	7	4	9	F05
50	188	62	126	32	43	65	50	7	4	9	
65	205	69	136	32	46	65	50	7	4	9	
80	227	77	150	32	46	65	50	7	4	9	
100	266	96	170	32	52	65	50	10	4	11	
125	294	114	180	32	56	90	70	10	4	14	F07
150	328	128	200	32	56	90	70	10	4	14	
200	394.5	166	228.5	37	60	125	102	12	4	17	F10
250	468	202	266	37	68	150	125	14	4	22	F12
300	527	235	292	37	78	150	125	14	4	22	

Combinazioni materiali standard – Standard materials combination				
		GS/316	GS/BA	BA/BA
Pos.	Descrizione Description	Materiale Material	Materiale Material	Materiale Material
1	Corpo Body	Ghisa sferoidale Nodular cast iron	Ghisa sferoidale Nodular cast iron	Bronzo alluminio Alluminum bronze
2	Sede Seat	NBR	NBR	NBR
3	Disco Disc	Acciaio Inox CF8M Stainless steel CF8M	Bronzo alluminio Alluminum bronze	Bronzo alluminio Alluminum bronze
4	Stelo Stem	Acciaio Inox Stainless steel	Acciaio Inox Stainless steel	Acciaio Inox Stainless steel
5	Boccola Bushing	P.T.F.E.	P.T.F.E.	P.T.F.E.
6	O-ring	NBR	NBR	NBR
7	Rondella Card	Acciaio carbonio zincato Galvanized carbon steel	Acciaio carbonio zincato Galvanized carbon steel	Acciaio carbonio zincato Galvanized carbon steel

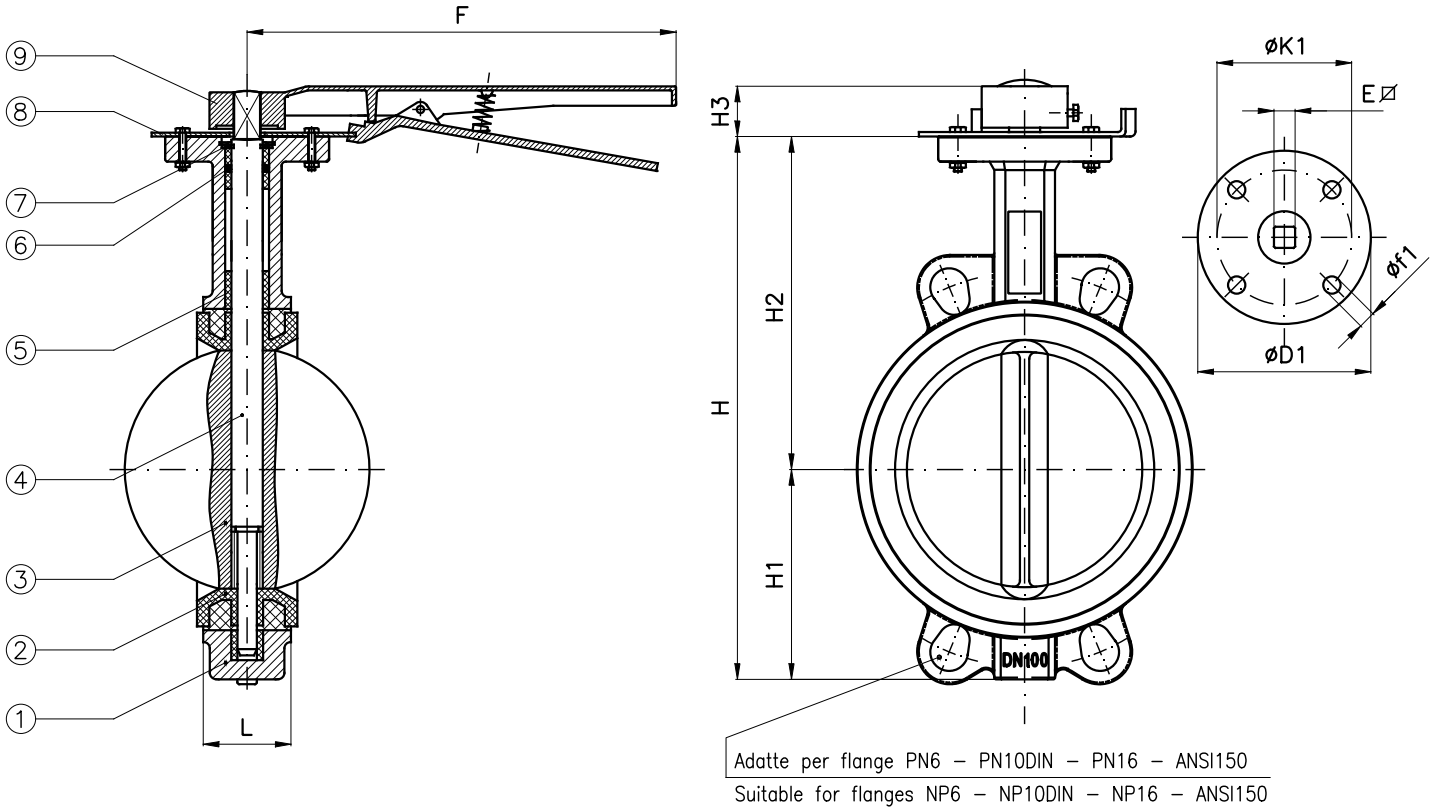

- Working pressure: 6/10/16bar.
- F to F DIM.ACC.to EN 558-1 SERIES20.
- Top-Flange ACC.to ISO5211.
- Fitting between flanges: DIN PN6/10/16/ANSI150.

DN	H	H1	H2	H3	L	F	D1	K1	f1	Holes NO. f1	E⌀	Top Flange
40	179	63	116	32	33	258	65	50	7	4	9	F05
50	188	62	126	32	43	258	65	50	7	4	9	
65	205	69	136	32	46	258	65	50	7	4	9	
80	227	77	150	32	46	258	65	50	7	4	9	
100	266	96	170	32	52	258	65	50	10	4	11	
125	294	114	180	32	56	258	90	70	10	4	14	F07
150	328	128	200	32	56	258	90	70	10	4	14	
200	394.5	166	228.5	37	60	358	125	102	12	4	17	F10
250	468	202	266	37	68	358	150	125	14	4	22	F12
300	527	235	292	37	78	358	150	125	14	4	22	

Combinazioni materiali standard – Standard materials combination				
		GS/316	GS/BA	BA/BA
Pos.	Descrizione Description	Materiale Material	Materiale Material	Materiale Material
1	Corpo Body	Ghisa sferoidale Nodular cast iron	Ghisa sferoidale Nodular cast iron	Bronzo alluminio Alluminum bronze
2	Sede Seat	NBR	NBR	NBR
3	Disco Disc	Acciaio Inox CF8M Stainless steel CF8M	Bronzo alluminio Alluminum bronze	Bronzo alluminio Alluminum bronze
4	Stelo Stem	Acciaio Inox Stainless steel	Acciaio Inox Stainless steel	Acciaio Inox Stainless steel
5	Boccola Bushing	P.T.F.E.	P.T.F.E.	P.T.F.E.
6	O-ring	NBR	NBR	NBR
7	Rondella Card	Acciaio carbonio zincato Galvanized carbon steel	Acciaio carbonio zincato Galvanized carbon steel	Acciaio carbonio zincato Galvanized carbon steel
8	Piastra Plate	Acciaio carbonio zincato Galvanized carbon steel	Acciaio carbonio zincato Galvanized carbon steel	Acciaio carbonio zincato Galvanized carbon steel
9	Maniglia Handle	Acciaio Steel	Acciaio Steel	Acciaio Steel

Valvole a farfalla tipo Wafer adatte per flange PN6 - PN10DIN - PN16 - ANSI150
Butterfly valves Wafer type suitable for flanges NP6 - NP10DIN - NP16 - ANSI150

Tab.203C-WA

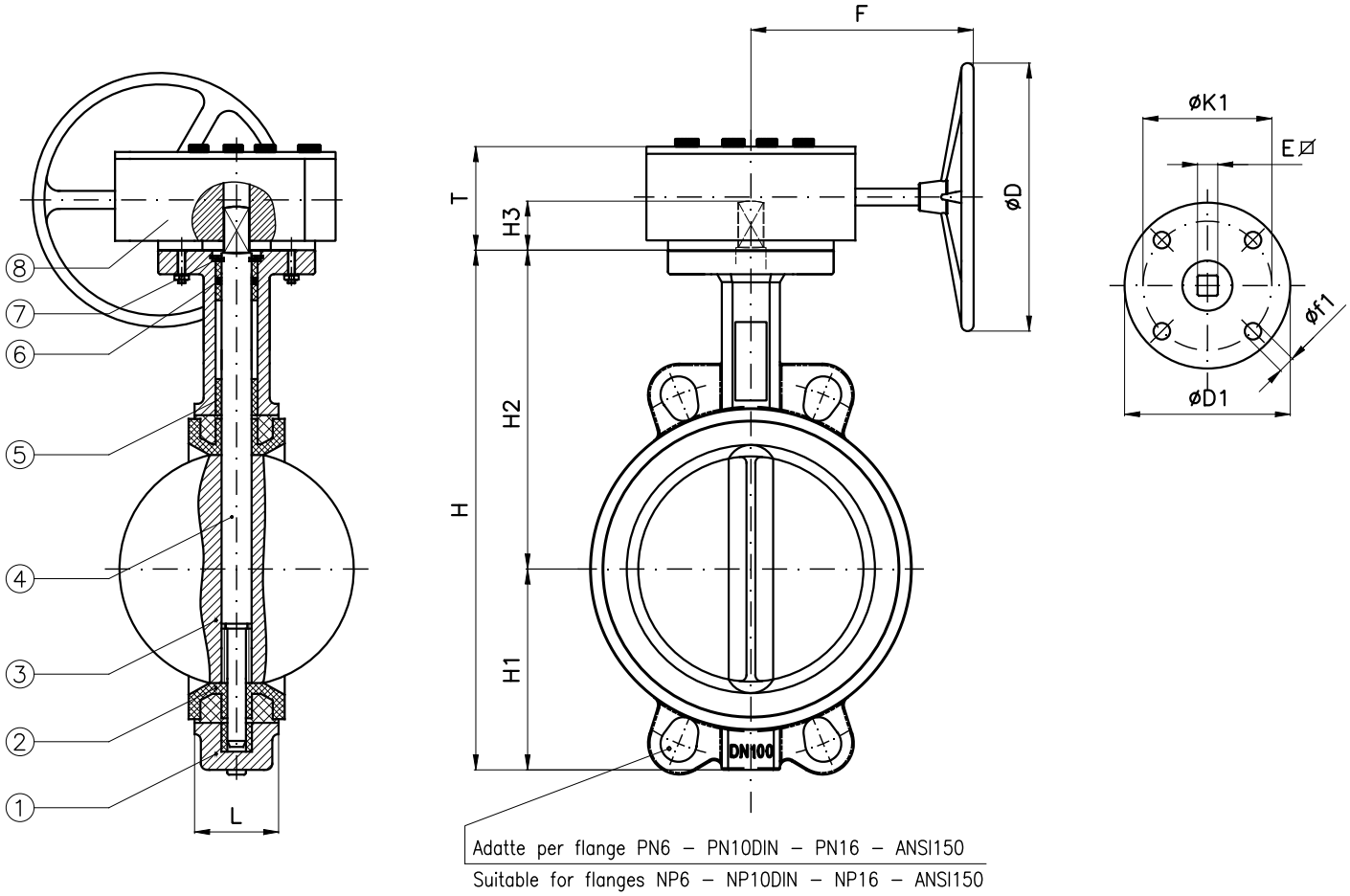

- Working pressure: 6/10/16bar.
- F to F DIM.ACC.to EN 558-1 SERIES20.
- Top-Flange ACC.to ISO5211.
- Fitting between flanges: DIN PN6/10/16/ANSI150.

DN	H	H1	H2	H3	L	F	T	D	D1	K1	f1	Holes NO. f1	E⌀	Top Flange
40	179	63	116	32	33	160	68	150	65	50	7	4	9	F05
50	188	62	126	32	43	160	68	150	65	50	7	4	9	
65	205	69	136	32	46	160	68	150	65	50	7	4	9	
80	227	77	150	32	46	160	68	150	65	50	7	4	9	
100	266	96	170	32	52	160	68	150	65	50	10	4	11	
125	294	114	180	32	56	160	68	150	90	70	10	4	14	F07
150	328	128	200	32	56	160	68	150	90	70	10	4	14	
200	394.5	166	228.5	37	60	227	72	285	125	102	12	4	17	F10
250	468	202	266	37	68	227	72	285	150	125	14	4	22	F12
300	527	235	292	37	78	227	72	285	150	125	14	4	22	

Combinazioni materiali standard – Standard materials combination				
		GS/316	GS/BA	BA/BA
Pos.	Descrizione Description	Materiale Material	Materiale Material	Materiale Material
1	Corpo Body	Ghisa sferoidale Nodular cast iron	Ghisa sferoidale Nodular cast iron	Bronzo alluminio Alluminum bronze
2	Sede Seat	NBR	NBR	NBR
3	Disco Disc	Acciaio Inox CF8M Stainless steel CF8M	Bronzo alluminio Alluminum bronze	Bronzo alluminio Alluminum bronze
4	Stelo Stem	Acciaio Inox Stainless steel	Acciaio Inox Stainless steel	Acciaio Inox Stainless steel
5	Boccola Bushing	P.T.F.E.	P.T.F.E.	P.T.F.E.
6	O-ring	NBR	NBR	NBR
7	Rondella Card	Acciaio carbonio zincato Galvanized carbon steel	Acciaio carbonio zincato Galvanized carbon steel	Acciaio carbonio zincato Galvanized carbon steel
8	Riduttore Gear	–	–	–

Valvole a farfalla tipo Wafer adatte per flange PN6 - PN10DIN - PN16 - ANSI150 con motore elettrico

Butterfly valves Wafer type suitable for flanges NP6 - NP10DIN - NP16 - ANSI150 with electric motor

Tab.203C-WA ME/AOX

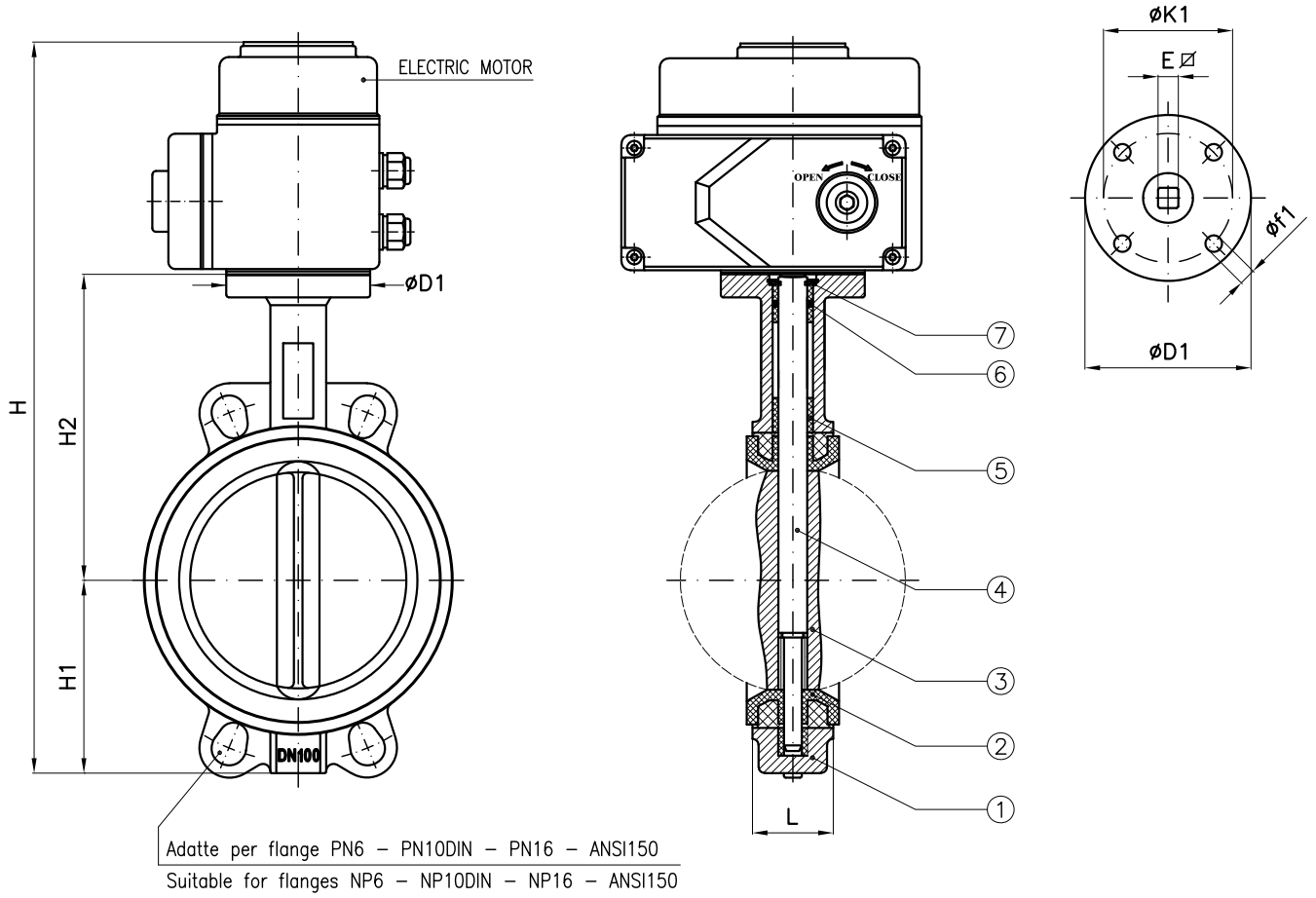

- Working pressure: 6/10/16bar.
- F to F DIM.ACC.to EN 558-1 SERIES20.
- Top-Flange ACC.to ISO5211.
- Fitting between flanges: DIN PN6/10/16/ANSI150.

					GS/316 – GS/BA				BA/BA										
DN	H (~)	H1	H2	L	D1	K1	f1	Top Flange	D1	K1	f1	Top Flange	Holes NO. f1	E⌀	Electric Motor	L2	L3	L4	L5
40	295	63	116	33	90	70	10		65	50	7		4	9	AOX-003	123	113	100	25
50	305	62	126	43	90	70	10		65	50	7		4	9	AOX-003	123	113	100	25
65	330	69	136	46	90	70	10		65	50	7	F05	4	9	AOX-005	160	121	121	25
80	350	77	150	46	90	70	10	F07	65	50	7		4	9	AOX-005	160	121	121	25
100	390	96	170	52	90	70	10		65	50	7		4	11	AOX-008	160	121	121	25
125	425	114	180	56	90	70	10		90	70	10	F07	4	14	AOX-015	189	129	145	25
150	460	128	200	56	90	70	10		90	70	10		4	14	AOX-015	189	129	145	25
200	560	166	228.5	60	125	102	12	F10	125	102	12	F10	4	17	AOX-020	268	164	200	25
250	635	202	266	68	125	102	12		150	125	14	F12	4	22	AOX-040	268	164	200	25
300	695	235	292	78	150	125	14	F12	150	125	14		4	22	AOX-060	268	164	200	25

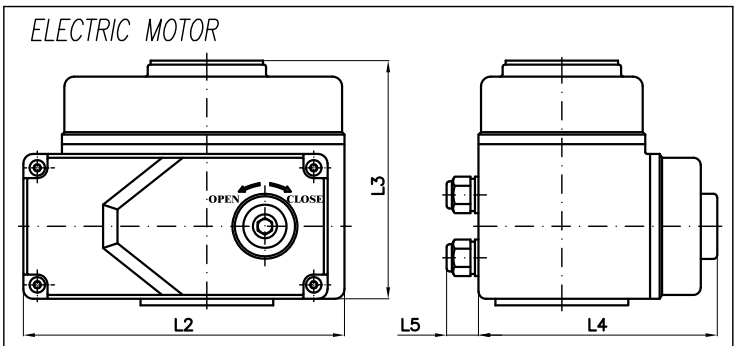

La scelta del motore dipende dalla pressione di esercizio dell'impianto
The choice of the motor depends from plant working pressure

Combinazioni materiali standard – Standard materials combination				
		GS/316	GS/BA	BA/BA
Pos.	Descrizione Description	Materiale Material	Materiale Material	Materiale Material
1	Corpo Body	Ghisa sferoidale Nodular cast iron	Ghisa sferoidale Nodular cast iron	Bronzo alluminio Alluminum bronze
2	Sede Seat	NBR	NBR	NBR
3	Disco Disc	Acciaio Inox CF8M Stainless steel CF8M	Bronzo alluminio Alluminum bronze	Bronzo alluminio Alluminum bronze
4	Stelo Stem	Acciaio Inox Stainless steel	Acciaio Inox Stainless steel	Acciaio Inox Stainless steel
5	Boccola Bushing	P.T.F.E.	P.T.F.E.	P.T.F.E.
6	O-ring	NBR	NBR	NBR
7	Rondella Card	Acciaio carbonio zincato Galvanized carbon steel	Acciaio carbonio zincato Galvanized carbon steel	Acciaio carbonio zincato Galvanized carbon steel

Valvole a farfalla tipo Lug PN6 - PN10DIN - PN16 - ANSI150
Butterfly valves Lug type NP6 - NP10DIN - NP16 - ANSI150

Tab.203.2

Conform to:

API STD 609
MSS SP 67
ANSI B16.5
ANSI B16.34
DIN3202
ISO 5752
UNI EN 1092

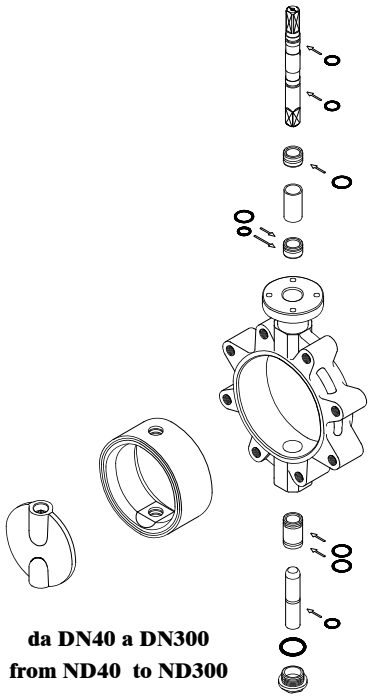

da DN40 a DN300
from ND40 to ND300

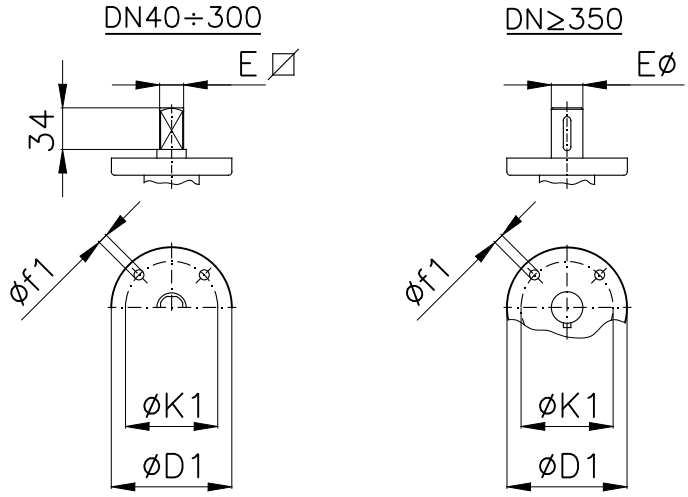

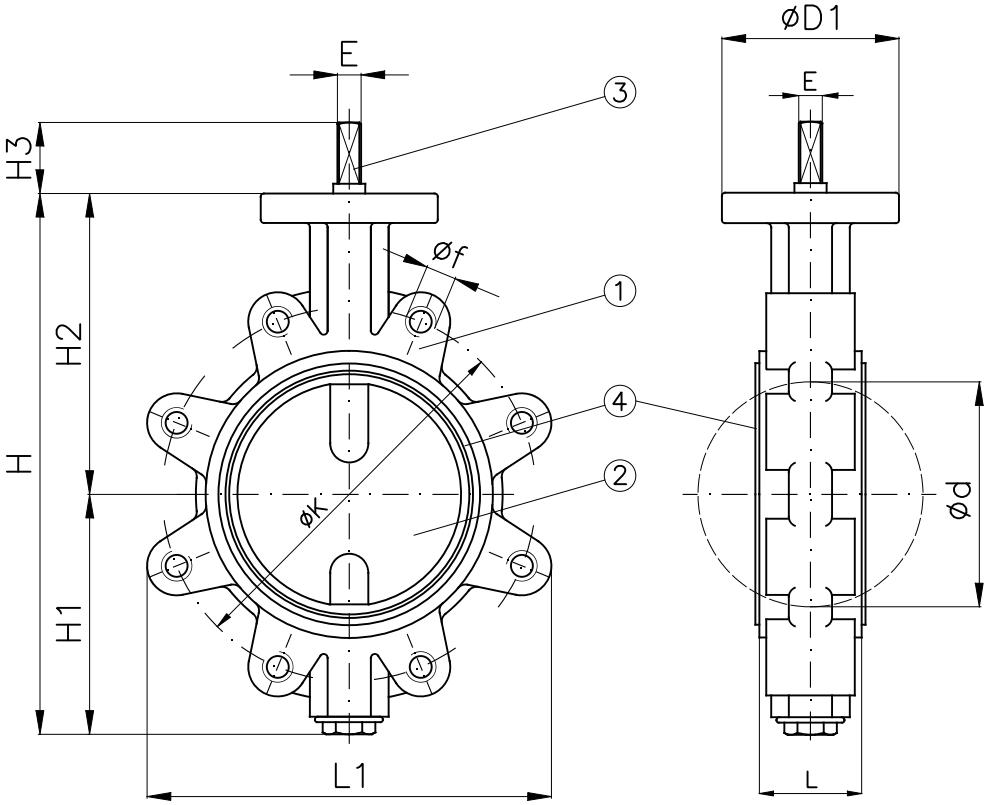

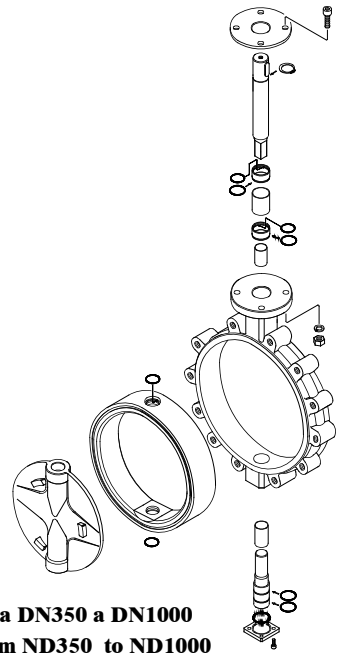

da DN350 a DN1000
from ND350 to ND1000

Attuatore idraulico
Hydraulic actuator

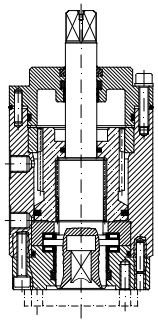

Attuatore pneumatico
Pneumatic actuator

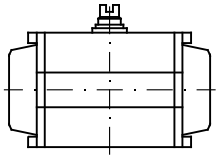

Riduttore a ingranaggi
Reduction gear

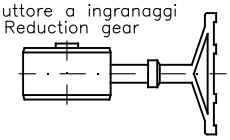

Attuatore elettrico
Electrical actuator

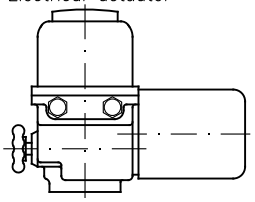

Leva
Lever

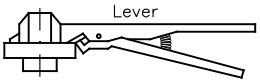

Valvole a farfalla tipo Lug PN6 - PN10DIN - PN16 - ANSI150
Butterfly valves Lug type NP6 - NP10DIN - NP16 - ANSI150

Tab.203.2

Pos.	Descrizione *Description*	Materiali	Materials
1	Corpo *Body*	Acciaio FeG45VR Acciaio inox CF8M Bronzo Alluminio Ghisa Sferoidale GGG40	*Cast Steel FeG45VR* *Stainless Steel CF8M* *Aluminium Bronze* *Nodular Cast Iron GGG40*
2	Disco *Disc*	Acciaio FeG45VR Acciaio inox CF8M Bronzo Alluminio Ghisa Sferoidale GGG40	*Cast Steel FeG45VR* *Stainless Steel CF8M* *Aluminium Bronze* *Nodular Cast Iron GGG40*
3	Stelo *Stem*	Acciaio inox AISI 316 Acciaio inox AISI 416	*Stainless Steel AISI 316* *Stainless Steel AISI 416*
4	Sede di tenuta *Disc seat ring*	Buna N Silicone EPDM Hypalon Viton PTFE	*Buna N Silicone* *EPDM Hypalon* *Viton PTFE*

campo di applicazione e caratteristiche delle sedi di tenuta in elastomero
application and characteristics for elastomer seats

DENOMINAZIONE COMMERCIALE *COMMERCIAL NAME*	DENOMINAZIONE TECNICA *TECHNICAL NAME*	CAMPO DI APPLICAZIONE *GENERAL APPLICATION*	LIMITI TEMPERATURA *TEMPERATURE LIMITS*	NON USARE PER: *NOT RECOMMENDED FOR:*
BUNA N (NBR)	Copolimero di butadiene e acrilonitrile ad alto tenore *Copolymer of butadiene and high acrylonitrile*	Idrocarburi con meno del 40% di aromatici, gas naturale, aria, H_2O, H_2O mare, salamoia, alcoli, glicoli. *Hydrocarbons with less than 40% of aromatics, natural gas, air, H_2O, sea water, brine, alcohols, glycols.*	−20°C −4°F +100°C +212°F	– SOLVENTI / *SOLVENTS* – BENZENE / *BENZENE* – XILOLO / *XYLENE*
ETILENE PROPILENE *ETHYLENE PROPILENE* (EPDM)	Termopolimero di etilene e propilene *Termopolymer of ethylene and propylene*	H_2O, vapore, H_2O mare, salamoia, sostanze abrasive, fosfati, esteri, chetoni, alcali composti alimentari, liquidi e solidi, acidi inorganici a bassa concentrazione, soda caustica. *H_2O, steam, air, brine, abrasives, phosphates, esters, ketones, alkali, food compounds, liquids and solids, dilute inorganic acids, caustic soda.*	−35°C −31°F +120°C +248°F	– IDROCARBURI / *HYDROCARBONS* – OLII / *OILS* – GRASSI / *FATS* – ARIA SECCA / *DRY AIR*
ETILENE PROPILENE ALTA TEMP. *ETHYLENE PROPILENE HIGH TEMP.* (EPDM H.T.)	Termopolimero di etilene e propilene *Termopolymer of ethylene and propylene*	H_2O, vapore, H_2O mare, salamoia, sostanze abrasive, fosfati, esteri, chetoni, alcali composti alimentari, liquidi e solidi, acidi inorganici a bassa concentrazione, soda caustica. *H_2O, steam, air, brine, abrasives, phosphates, esters, ketones, alkali, food compounds, liquids and solids, dilute inorganic acids, caustic soda.*	−35°C −31°F +150°C +302°F	– IDROCARBURI / *HYDROCARBONS* – OLII / *OILS* – GRASSI / *FATS* – ARIA SECCA / *DRY AIR*
HYPALON (CSM)	Clorosulfonato di polietilene *Chlorosylphonated polyethylene*	Acidi ossidanti, acido cromico, acido fluoridrico, acidi a base di zolfo, ipocloriti di sodio, ozono. *Oxidizing acids, chromic acid, hydrofluoric acid, sulphur based acids, sodium hypoclorite, ozone.*	−18°C 0°F +100°C +212°F	– VAPORE / *STEAM* – CHETONI / *KETONES* – ARIA CALDA / *HOT AIR* – ACIDO NITRICO / *NITRIC ACID*
SILICONE (Q)	Metil vinile siliconica *Methylvinyl silicone*	Bevande – Alimentari *Beverages – Foodstuffs*	−30°C −22°F +150°C +302°F	– IDROCARBURI / *HYDROCARBONS* – SOLVENTI / *SOLVENTS* – VAPORE / *STEAM*
VITON (FPM)	Copolimero esafluoropropilene viniliden fluoruro *Copolymer of exafluoro propylene fluoro vinyldene*	Idrocarburi ad alta concentrazione di aromaticita',acidi minerali e alogenati, acido fosforico, eteri aromatici ed alifatici. *Hydrocarbons with high concentration of aromatics, mineral and halogenated acids, phosforic acid, aliphatic and aromatic ethers.*	−10°C −14°F +160°C +320°F	– VAPORE / *STEAM* – CHETONI / *KETONES* – AMMINE / *AMINES* – ESTERI / *ESTERS* – ALCALI / *ALKALI*
NEOPRENE (CR)	Policloroprene *Polichloroprene*	Olii, acidi minerali diluiti, alcali, grassi. *Oils, diluite mineral acids, alkali, fats.*	−18°C 0°F +90°C +194°F	– CHETONI / *KETONES* – ACIDI CONCENTRATI/*CONCENTRATED ACIDS* – VAPORE / *STEAM*
GOMMA NATURALE NATURAL RUBBER (NR)	Lattice (vegetale) *Latex (vegetable)*	Prodotti abrasivi *Abrasive products*	−35°C −31°F +65°C +149°F	– SOLVENTI PER VERNICI/*SOLVENTS FOR PAINT* – IDROCARBURI / *HYDROCARBONS* – OLII / *OILS*
TEFLON (P.T.F.E.)	Politetrafluoro etilene *Polytetrafluoro ethylene*	Prodotti corrosivi – Solventi *Corrosive products – Solvents*	−40°C −40°F +180°C +356°F	– PRODOTTI ABRASIVI/*ABRASIVE PRODUCTS* – FLUORO ALLO STATO GASSOSO/*FLUORINE GASEOUS* – METALLI ALCALINI ALLO STATO FUSO/*ALKALINE METALS*

DN		d	E⌀	E⌀	H	H1	H2	H3	L	L1	Weight (Kg)	ATTACCO ISO 5211 D1	K1	f1	Holes NO. f1		PN6 K	f	Holes NO. f	PN10 K	f	Holes NO. f	PN16 K	f	Holes NO. f	ANSI150 K	f	Holes NO. f
40	1"1/2	45.9	12	–	188	90	98	41	33	111	2.6	90	70	8.5	4		100	M12	4	110	M16	4	110	M16	4	98.5	M14	4
50	2"	56.6	12	–	205	96	109	41	43	120	3.5	90	70	8.5	4		110	M12	4	125	M16	4	125	M16	4	120.5	M18	4
65	2"1/2	70.5	12	–	230	108	122	41	46	138	4.9	90	70	8.5	4		130	M12	4	145	M16	4	145	M16	4	139.5	M18	4
80	3"	83.3	12	–	250	118	132	41	46	150	5.4	90	70	8.5	4		150	M16	4	160	M16	8	160	M16	8	152.4	M18	4
100	4"	105	12	–	285	132	153	41	52	213	7	90	70	8.5	4	F07	170	M16	4	180	M16	8	180	M16	8	190.5	M18	8
125	5"	127.7	16	–	327	150	177	41	56	243	10	90	70	8.5	4		200	M16	8	210	M16	8	210	M16	8	216.0	M20	8
150	6"	152.2	16	–	359	165	194	41	56	267	11.1	90	70	8.5	4		225	M16	8	240	M20	8	240	M20	8	241.5	M20	8
200	8"	197.6	16	–	419	194	225	41	60	320	17	90	70	8.5	4		280	M16	8	295	M20	8	295	M20	12	298.5	M20	8
250	10"	245.9	18	–	495	220	275	41	68	402	27.4	125	102	11	4	F10	335	M16	12	350	M20	12	355	M24	12	362.0	M22	12
300	12"	298.2	24	–	559	262	297	41	78	473	40.4	125	102	11	4		395	M20	12	400	M20	12	410	M24	12	432.0	M22	12
350	14"	332	–	44.5	632	281	351	60	78	516	60	175	140	17	4		445	M20	12	460	M20	16	470	M24	16	476.0	M27	12
400	16"	380	–	44.5	681	305.5	375.5	60	102	590	90	175	140	17	4	F14	495	M20	16	515	M24	16	525	M27	16	540.0	M27	16
450	18"	432	–	44.5	749	349	400	60	114	644	110	175	140	17	4		550	M20	16	565	M24	20	585	M27	20	578.0	M30	16
500	20"	483	–	44.5	798	373	425	60	127	715	150	175	140	17	4		600	M20	20	620	M24	20	650	M30	20	635.0	M30	20
600	24"	591.5	–	63	936	445	491	90	153	830	270	210	165	22	4	F16	705	M24	20	725	M27	20	770	M33	20	749.5	M33	20
700	28"	680	–	75	1120	540	580	90	165	910	370	300	254	17	8	F25	810	M24	24	840	M27	24	840	M33	24	863.6	M33	28
800	32"	790	–	75	1242	612	630	90	190	1040	480	360	254	17	8	F25	920	M27	24	950	M30	24	950	M36	24	977.9	M39	28
1000	40"	975	–	95	1500	740	760	120	216	1260	680	415	298	22	8	F30	1120	M27	28	1160	M33	28	1170	M39	28	1200.2	M39	36

Valvole a farfalla tipo Lug PN6 - PN10DIN - PN16 - ANSI150 con attuatore idraulico doppio effetto
Butterfly valves Lug type NP6 - NP10DIN - NP16 - ANSI150 with hydraulic double acting actuator

Tab.203.2
Hydr/DA

Conform to:

API STD 609
MSS SP 67
ANSI B16.5
ANSI B16.34
DIN3202
ISO 5752
UNI EN 1092

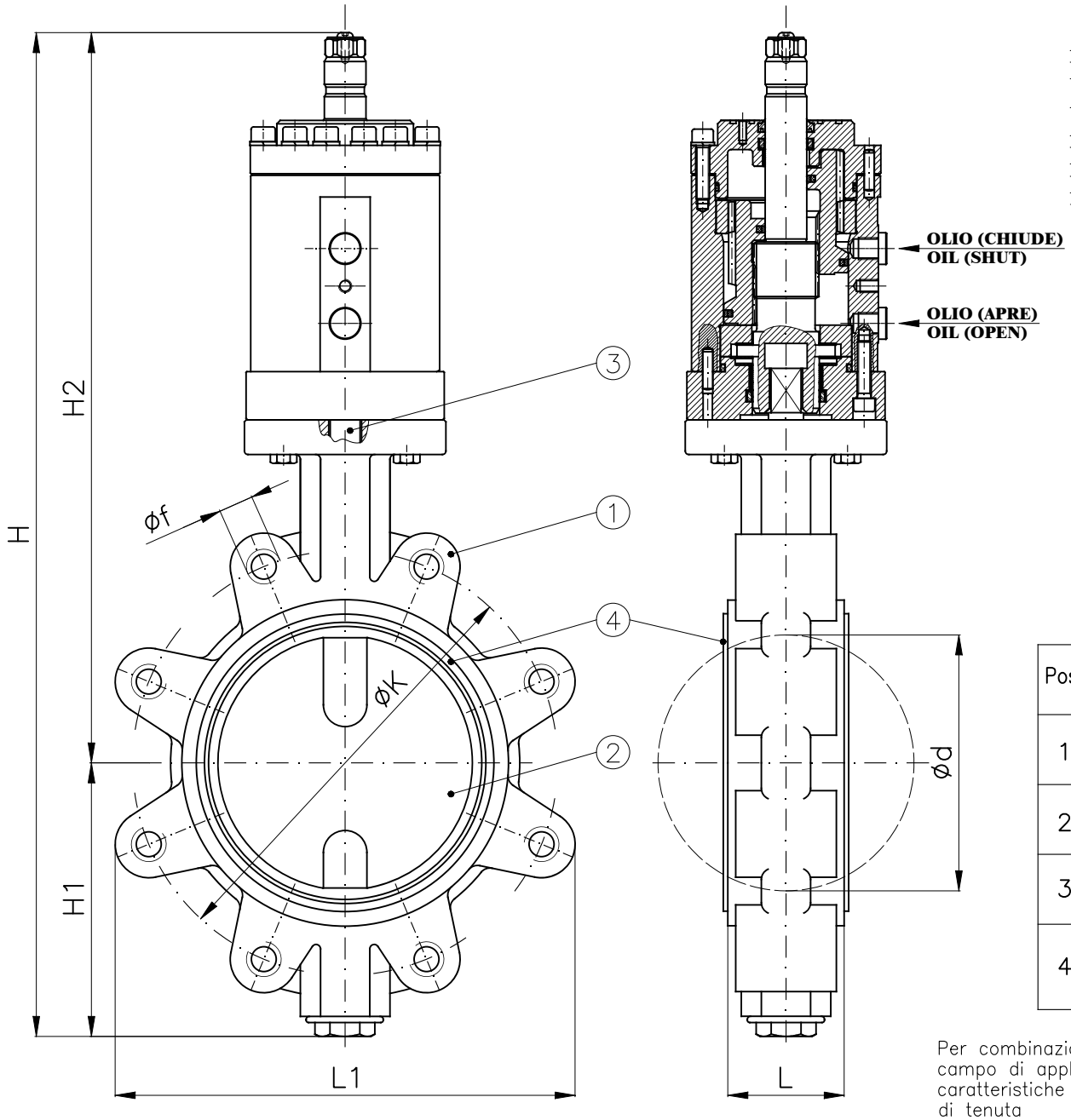

Pos.	Descrizione *Description*
1	Corpo *Body*
2	Disco *Disc*
3	Stelo *Stem*
4	Sede di tenuta *Disc seat ring*

Per combinazioni materiali, campo di applicazione, caratteristiche delle sedi di tenuta consultare Tab.203.2

For materials' combination, application range and seats' characteristics consult Tab.203.2

Attuatore rotante a doppio effetto

Le taglie degli attuatori devono essere verificate in funzione della pressione di esercizio della valvola e della pressione dell'olio del circuito idraulico.

Double acting rotary actuator

The size of the actuator must be checked on the strength of the working pressure of the valve and on the strength of the oil pressure inside the hydraulic circuit.

DN		ATTUATORE *ACTUATOR*	d	H	H1	H2	L	L1	PN6 – NP6 K	f	Holes No. f	PN10 – NP10 K	f	Holes No. f	PN16 – NP16 K	f	Holes No. f	ANSI150 K	f	Holes No. f	Weight (Kg)
40	1"1/2	ARL10 (RL.14)	45.9	395	90	305	33	111	100	M12	4	110	M16	4	110	M16	4	98.5	M14	4	9
50	2"	ARL10 (RL.14)	56.6	410	96	314	43	120	110	M12	4	125	M16	4	125	M16	4	120.5	M18	4	10
65	2"1/2	ARL10 (RL.14)	70.5	435	108	327	46	138	130	M12	4	145	M16	4	145	M16	4	139.5	M18	4	12
80	3"	ARL10 (RL.14)	83.3	455	118	337	46	150	150	M16	4	160	M16	8	160	M16	8	152.4	M18	4	13
100	4"	ARL10 (RL.14)	105	490	132	358	52	213	170	M16	4	180	M16	8	180	M16	8	190.5	M18	8	15
125	5"	ARL20 (RL.16)	127.7	545	150	395	56	243	200	M16	8	210	M16	8	210	M16	8	216	M20	8	21.5
150	6"	ARL20 (RL.16)	152.2	580	165	415	56	267	225	M16	8	240	M20	8	240	M20	8	241.5	M20	8	22.5
200	8"	ARL45 (RL.26)	197.6	650	194	456	60	320	280	M16	8	295	M20	8	295	M20	12	298.5	M20	8	34
250	10"	ARL45 (RL.26)	245.9	730	220	510	68	402	335	M16	12	350	M20	12	355	M24	12	362	M22	12	50
300	12"	ARL75 (RL.32)	298.2	815	262	553	78	473	395	M20	12	400	M20	12	410	M24	12	432	M22	12	71
350	14"	ARL110 (RL.36)	332	925	281	644	78	516	445	M20	12	460	M20	16	470	M24	16	476	M27	12	100
400	16"	ARL110 (RL.36)	380	970	305.5	664.5	102	590	495	M20	16	515	M24	16	525	M27	16	540	M27	16	140
450	18"	ARL200 (RL.44)	432	1090	349	741	114	644	550	M20	16	565	M24	20	585	M27	20	578	M30	16	165
500	20"	ARL320 (RL.52)	483	1170	373	797	127	715	600	M20	20	620	M24	20	650	M30	20	635	M30	20	265
600	24"	ARL600 (RL.60)	591.5	1375	445	930	153	830	705	M24	20	725	M27	20	770	M33	20	749.5	M33	20	440
700	28"	ARL600 (RL.60)	680	1560	540	1020	165	910	810	M24	24	840	M27	24	840	M33	24	863.6	M33	28	600
800	32"	ARL1000 (RL.67)	790	1755	612	1143	190	1040	920	M27	24	950	M30	24	950	M36	24	977.9	M39	28	800
1000	40"	ARL1000 (RL.67)	975	2015	740	1275	216	1260	1120	M27	28	1160	M33	28	1170	M39	28	1200.2	M39	36	980

Valvole a farfalla tipo Lug PN6 - PN10DIN - PN16 - ANSI150 con attuatore idraulico singolo effetto

Butterfly valves Lug type NP6 - NP10DIN - NP16 - ANSI150 with hydraulic single acting actuator

Tab.203.2

Hydr/SR

Conform to:

API STD 609
MSS SP 67
ANSI B16.5
ANSI B16.34
DIN3202
ISO 5752
UNI EN 1092

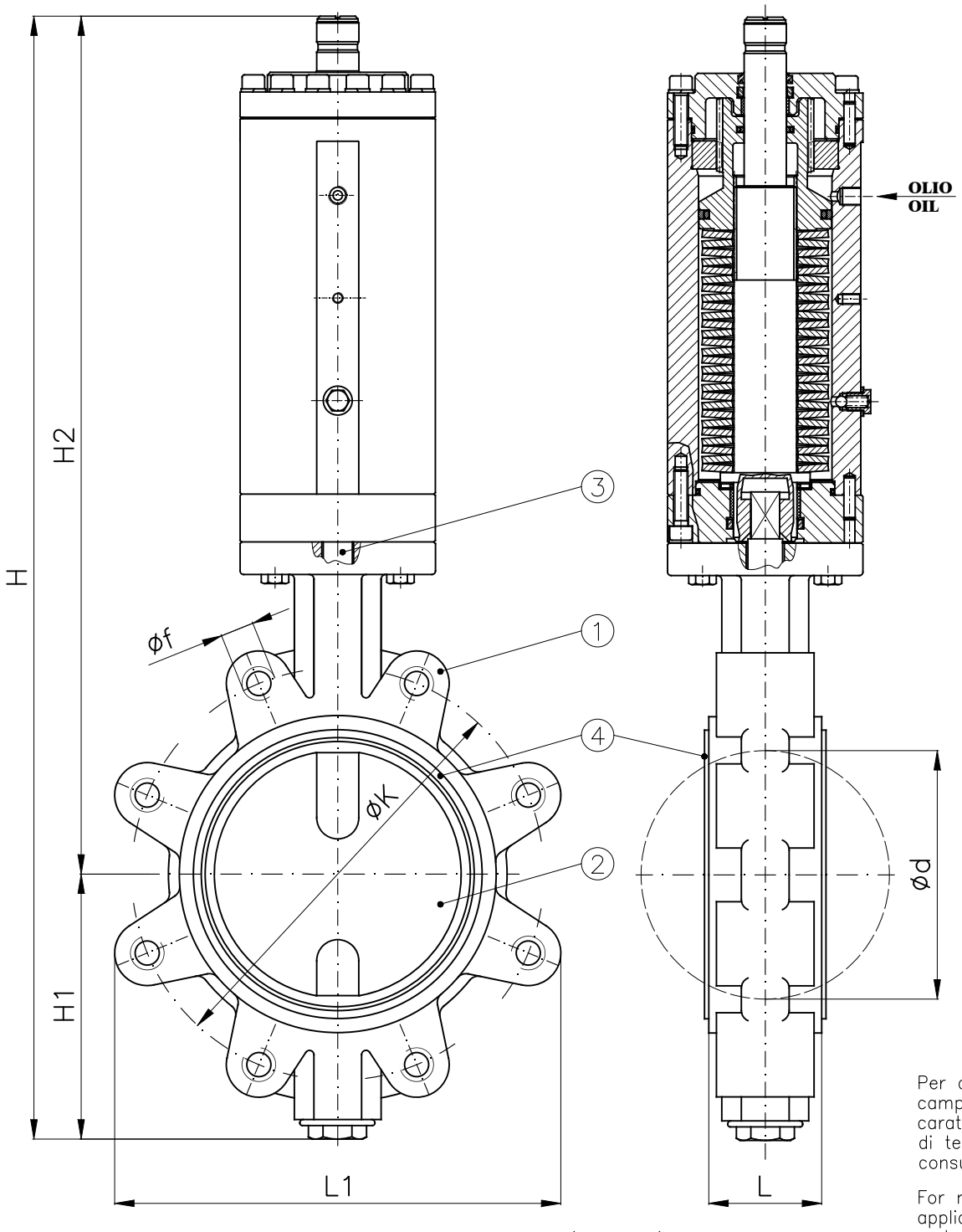

Pos.	Descrizione *Description*
1	Corpo *Body*
2	Disco *Disc*
3	Stelo *Stem*
4	Sede di tenuta *Disc seat ring*

Per combinazioni materiali, campo di applicazione, caratteristiche delle sedi di tenuta consultare Tab.203.2

For materials' combination, application range and seats' characteristics consult Tab.203.2

Attuatore rotante a singolo effetto con ritorno a molla

Single acting rotary actuator (spring return)

Le taglie degli attuatori devono essere verificate in funzione della pressione di esercizio della valvola e della pressione dell'olio del circuito idraulico.

The size of the actuator must be checked on the strength of the working pressure of the valve and on the strength of the oil pressure inside the hydraulic circuit.

DN		ATTUATORE *ACTUATOR*	d	H	H1	H2	L	L1	PN6 – NP6 K	f	Holes No. f	PN10 – NP10 K	f	Holes No. f	PN16 – NP16 K	f	Holes No. f	ANSI150 K	f	Holes No. f	Weight (Kg)
40	1"1/2	H927 (RS.10)	45.9	510	90	420	33	111	100	M12	4	110	M16	4	110	M16	4	98.5	M14	4	16
50	2"	H927 (RS.10)	56.6	525	96	429	43	120	110	M12	4	125	M16	4	125	M16	4	120.5	M18	4	17
65	2"1/2	H927 (RS.10)	70.5	550	108	442	46	138	130	M12	4	145	M16	4	145	M16	4	139.5	M18	4	18
80	3"	H927 (RS.10)	83.3	570	118	452	46	150	150	M16	4	160	M16	8	160	M16	8	152.4	M18	4	19
100	4"	H927 (RS.10)	105	605	132	473	52	213	170	M16	4	180	M16	8	180	M16	8	190.5	M18	8	20
125	5"	H929 (RS.13)	127.7	705	150	555	56	243	200	M16	8	210	M16	8	210	M16	8	216	M20	8	27
150	6"	H929 (RS.13)	152.2	735	165	570	56	267	225	M16	8	240	M20	8	240	M20	8	241.5	M20	8	44.5
200	8"	H939 (RS.17)	197.6	1015	194	821	60	320	280	M16	8	295	M20	8	295	M20	12	298.5	M20	8	57.5
250	10"	H941 (RS.26)	245.9	1020	220	800	68	402	335	M16	12	350	M20	12	355	M24	12	362	M22	12	70
300	12"	H942 (RS.30)	298.2	1020	262	758	78	473	395	M20	12	400	M20	12	410	M24	12	432	M22	12	76

Valvole a farfalla tipo Lug PN6 - PN10DIN - PN16 - ANSI150 con motore elettrico

Butterfly valves Lug type NP6 - NP10DIN - NP16 - ANSI150 with electric motor

Tab.203.2
ME/AOX

Conform to:

API STD 609
MSS SP 67
ANSI B16.5
ANSI B16.34
DIN3202
ISO 5752
UNI EN 1092

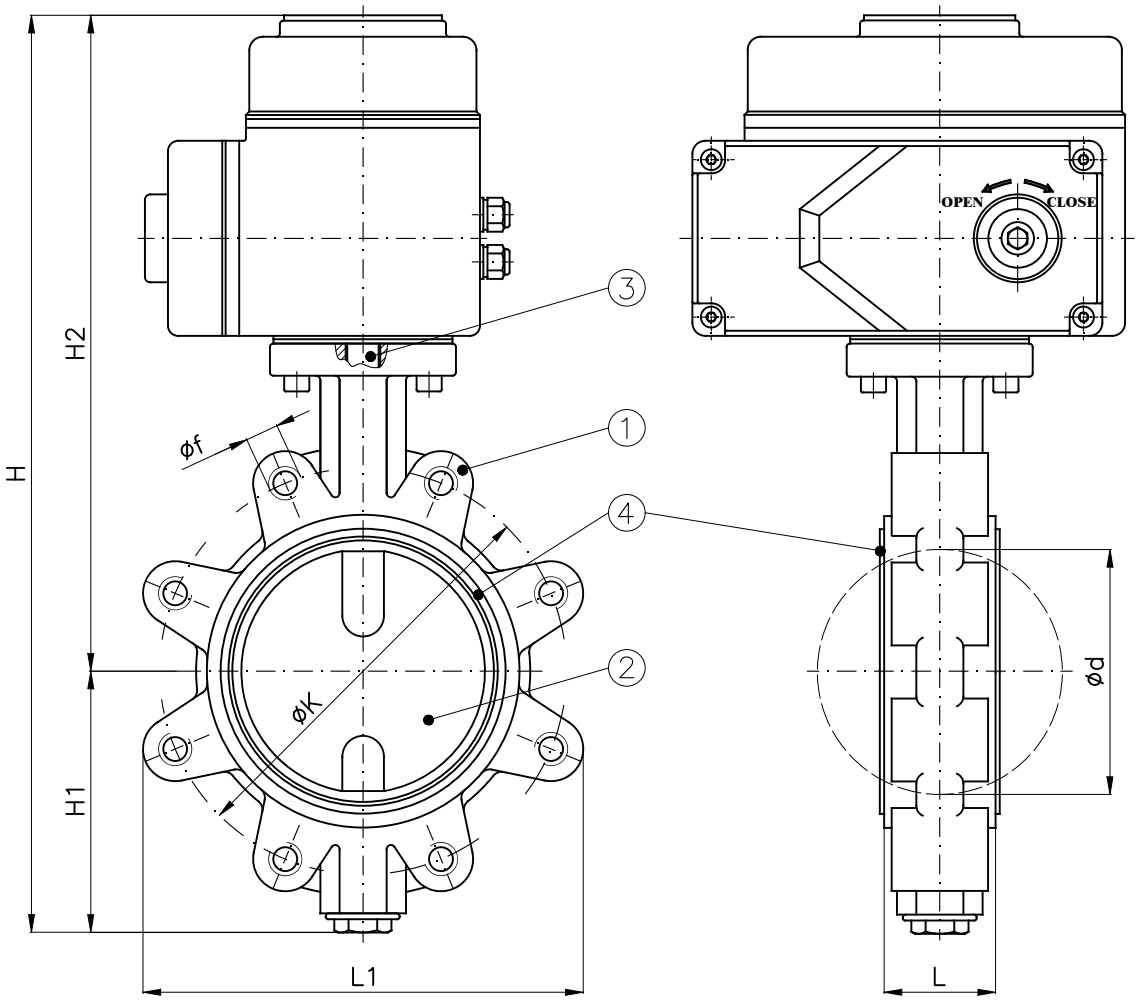

Pos.	Descrizione *Description*
1	Corpo *Body*
2	Disco *Disc*
3	Stelo *Stem*
4	Sede di tenuta *Disc seat ring*

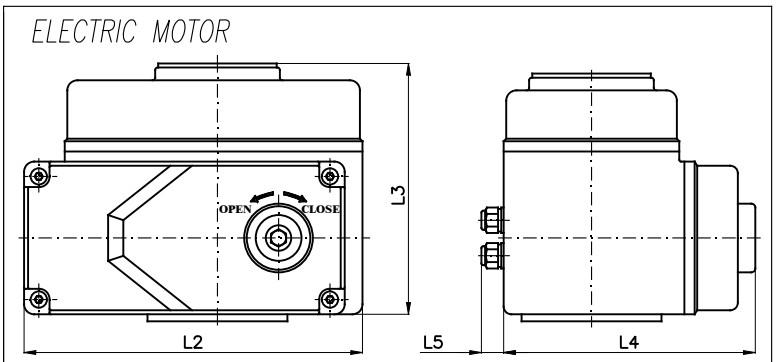

La scelta del motore dipende dalla pressione di esercizio dell'impianto
The choice of the motor depends from plant working pressure

Per combinazioni materiali, campo di applicazione, caratteristiche delle sedi di tenuta consultare Tab.203.2

For materials' combination, application range and seats' characteristics consult Tab.203.2

DN		Electric Motor	d	H	H1	H2	L	L1	L2	L3	L4	L5	PN6 – NP6 K	PN6 – NP6 f	PN6 – NP6 Holes No. f	PN10 – NP10 K	PN10 – NP10 f	PN10 – NP10 Holes No. f	PN16 – NP16 K	PN16 – NP16 f	PN16 – NP16 Holes No. f	ANSI150 K	ANSI150 f	ANSI150 Holes No. f	Weight (Kg)
40	1"1/2	AOX–005	45.9	188	90	220	34	111	160	121	121	25	100	M12	4	110	M16	4	110	M16	4	98.5	M14	4	6.2
50	2"	AOX–005	56.6	205	96	230	43.5	120	160	121	121	25	110	M12	4	125	M16	4	125	M16	4	120.5	M18	4	7.1
65	2"1/2	AOX–005	70.5	230	108	245	46	138	160	121	121	25	130	M12	4	145	M16	4	145	M16	4	139.5	M18	4	8.5
80	3"	AOX–005	83.3	250	118	255	46	150	160	121	121	25	150	M16	4	160	M16	8	160	M16	8	152.4	M18	4	9
100	4"	AOX–008	105	285	132	275	52	213	160	121	121	25	170	M16	4	180	M16	8	180	M16	8	190.5	M18	8	10.6
125	5"	AOX–015	127.7	327	150	310	56.5	243	189	129	145	25	200	M16	8	210	M16	8	210	M16	8	216	M20	8	14.6
150	6"	AOX–030	152.2	359	165	360	56.5	267	268	164	200	25	225	M16	8	240	M20	8	240	M20	8	241.5	M20	8	24.6
200	8"	AOX–040	197.6	419	194	390	60	320	268	164	200	25	280	M16	8	295	M20	8	295	M20	12	298.5	M20	8	30.8
250	10"	AOX–060	245.9	495	220	440	68	402	268	164	200	25	335	M16	12	350	M20	12	355	M24	12	362	M22	12	41.4
300	12"	AOX–080	298.2	559	262	465	78	473	268	164	200	25	395	M20	12	400	M20	12	410	M24	12	432	M22	12	54.7

Valvole a farfalla tipo Lug PN6-PN10DIN-PN16-ANSI150 con motore elettrico
Butterfly valves Lug type NP6-NP10DIN-NP16-ANSI150 with electric motor

Tab.203.2
ME/PS

Conform to:

API STD 609
MSS SP 67
ANSI B16.5
ANSI B16.34
DIN3202
ISO 5752
UNI EN 1092

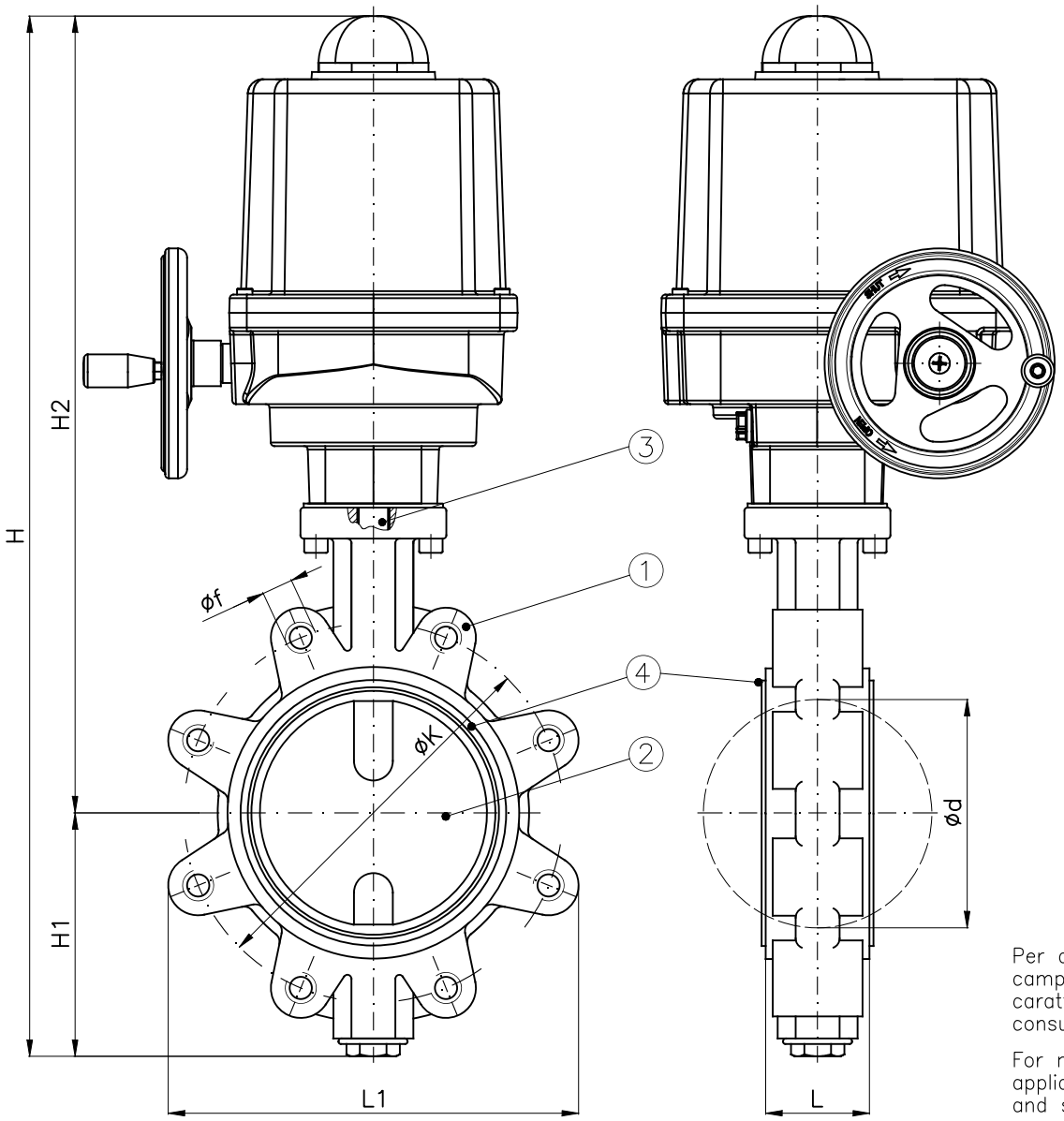

Pos.	Descrizione *Description*
1	Corpo *Body*
2	Disco *Disc*
3	Stelo *Stem*
4	Sede di tenuta *Disc seat ring*

Per combinazioni materiali, campo di applicazione, caratteristiche delle sedi di tenuta consultare Tab.203.2

For materials' combination, application range and seats' characteristics consult Tab.203.2

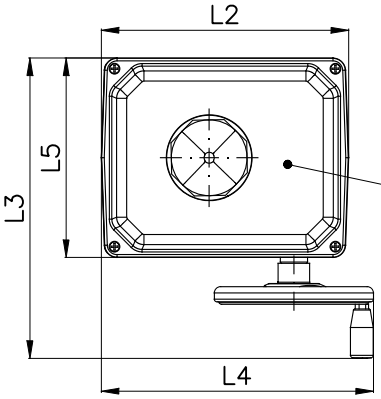

Classe di protezione : IP67 o IP68
Safety class : IP67 or IP68

DN		Electric Motor	d	H	H1	H2	L	L1	L2	L3	L4	L5	PN6 – NP6 K	PN6 – NP6 f	PN6 – NP6 Holes No. f	PN10 – NP10 K	PN10 – NP10 f	PN10 – NP10 Holes No. f	PN16 – NP16 K	PN16 – NP16 f	PN16 – NP16 Holes No. f	ANSI150 K	ANSI150 f	ANSI150 Holes No. f	Weight (Kg)
40	1"1/2	PSQ–E100	45.9	460	90	370	33	111	174	251	206	158	100	M12	4	110	M16	4	110	M16	4	98.5	M14	4	8.9
50	2"	PSQ–E100	56.6	476	96	380	43	120	174	251	206	158	110	M12	4	125	M16	4	125	M16	4	120.5	M18	4	9.6
65	2"1/2	PSQ–E100	70.5	503	108	395	46	138	174	251	206	158	130	M12	4	145	M16	4	145	M16	4	139.5	M18	4	11
80	3"	PSQ–E100	83.3	523	118	405	46	150	174	251	206	158	150	M16	4	160	M16	8	160	M16	8	152.4	M18	4	11.7
100	4"	PSQ103	105	552	132	420	52	213	196	263	216	158	170	M16	4	180	M16	8	180	M16	8	190.5	M18	8	15
125	5"	PSQ103	127.7	595	150	445	56	243	196	263	216	158	200	M16	8	210	M16	8	210	M16	8	216	M20	8	17.6
150	6"	PSQ203	152.2	720	165	555	56	267	227	305	277	186	225	M16	8	240	M20	8	240	M20	8	241.5	M20	8	22.6
200	8"	PSQ203	197.6	779	194	585	60	320	227	305	277	186	280	M16	8	295	M20	8	295	M20	12	298.5	M20	8	28.2
250	10"	PSQ503	245.9	915	220	695	68	402	278	416	328	235	335	M16	12	350	M20	12	355	M24	12	362	M22	12	54
300	12"	PSQ503	298.2	982	262	720	78	473	278	416	328	235	395	M20	12	400	M20	12	410	M24	12	432	M22	12	68

Valvole a farfalla tipo Lug PN6 - PN10DIN - PN16 - ANSI150 con motore elettrico

Butterfly valves Lug type NP6 - NP10DIN - NP16 - ANSI150 with electric motor

Tab.203.2
ME/VAL

Conform to:

API STD 609
MSS SP 67
ANSI B16.5
ANSI B16.34
DIN3202
ISO 5752
UNI EN 1092

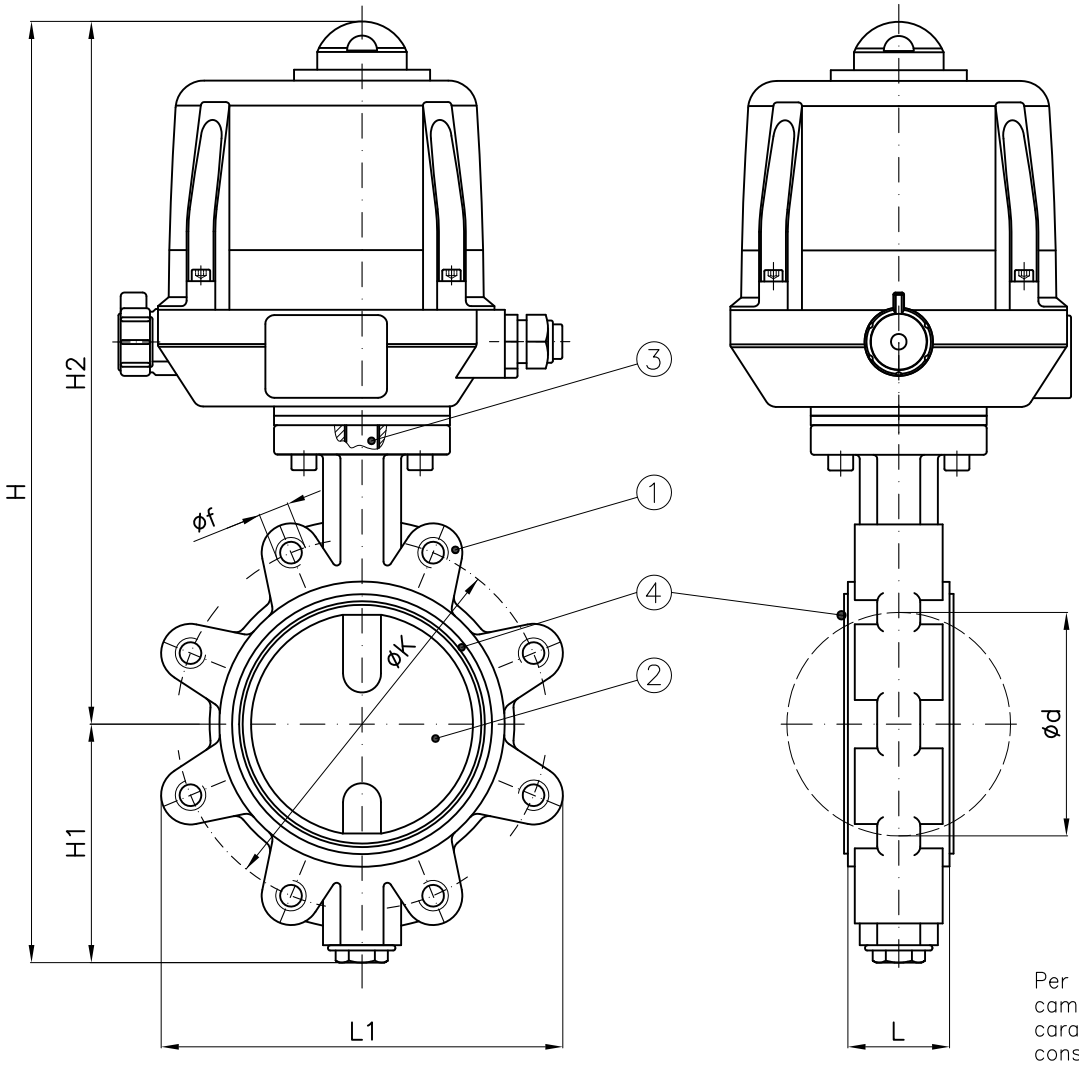

Pos.	Descrizione *Description*
1	Corpo *Body*
2	Disco *Disc*
3	Stelo *Stem*
4	Sede di tenuta *Disc seat ring*

Per combinazioni materiali, campo di applicazione, caratteristiche delle sedi di tenuta consultare Tab.203.2

For materials' combination, application range and seats' characteristics consult Tab.203.2

									PN6–NP6			PN10–NP10			PN16–NP16			ANSI150			
DN		Electric Motor	d	H	H1	H2	L	L1	K	f	Holes No. f	K	f	Holes No. f	K	f	Holes No. f	K	f	Holes No. f	Weight (Kg)
40	1"1/2	VR45	45.9	389	90	299	33	111	100	M12	4	110	M16	4	110	M16	4	98.5	M14	4	6.5
50	2"	VR45	56.6	406	96	310	43	120	110	M12	4	125	M16	4	125	M16	4	120.5	M18	4	7
65	2"1/2	VR75	70.5	431	108	323	46	138	130	M12	4	145	M16	4	145	M16	4	139.5	M18	4	8.5
80	3"	VS100	83.3	508	118	390	46	150	150	M16	4	160	M16	8	160	M16	8	152.4	M18	4	11
100	4"	VS100	105	543	132	411	52	213	170	M16	4	180	M16	8	180	M16	8	190.5	M18	8	12.5
125	5"	VS150	127.7	585	150	435	56	243	200	M16	8	210	M16	8	210	M16	8	216	M20	8	15.5
150	6"	VS150	152.2	617	165	452	56	267	225	M16	8	240	M20	8	240	M20	8	241.5	M20	8	17
200	8"	VS300	197.6	677	194	483	60	320	280	M16	8	295	M20	8	295	M20	12	298.5	M20	8	22.5
250	10"	VT600	245.9	801	220	581	68	402	335	M16	12	350	M20	12	355	M24	12	362	M22	12	48.5
300	12"	VT1000	298.2	865	262	603	78	473	395	M20	12	400	M20	12	410	M24	12	432	M22	12	61.5

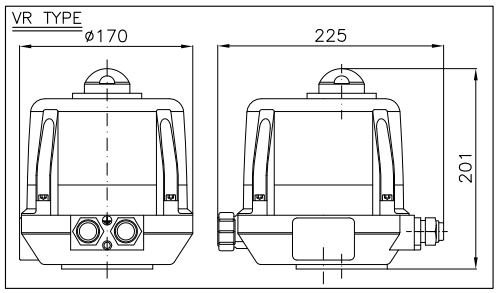

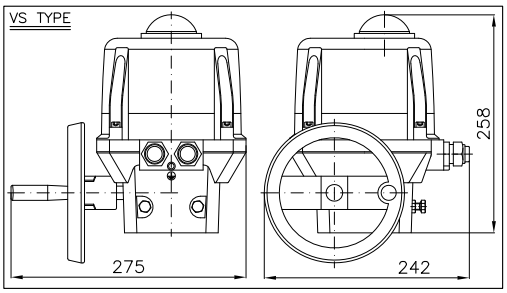

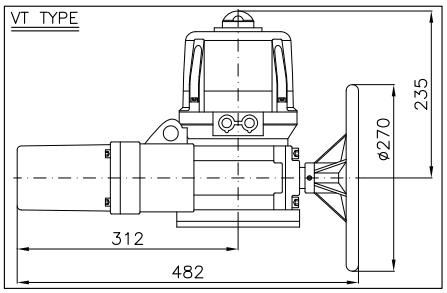

Valvole a farfalla tipo Lug con attuatore pneumatico PN6 - PN10DIN - PN16 - ANSI150

Butterfly valves Lug type with pneumatic actuator NP6 - NP10DIN - NP16 - ANSI150

Tab.203.2PN

Conform to:

API STD 609
MSS SP 67
ANSI B16.5
ANSI B16.34
DIN3202
ISO 5752
UNI EN 1092

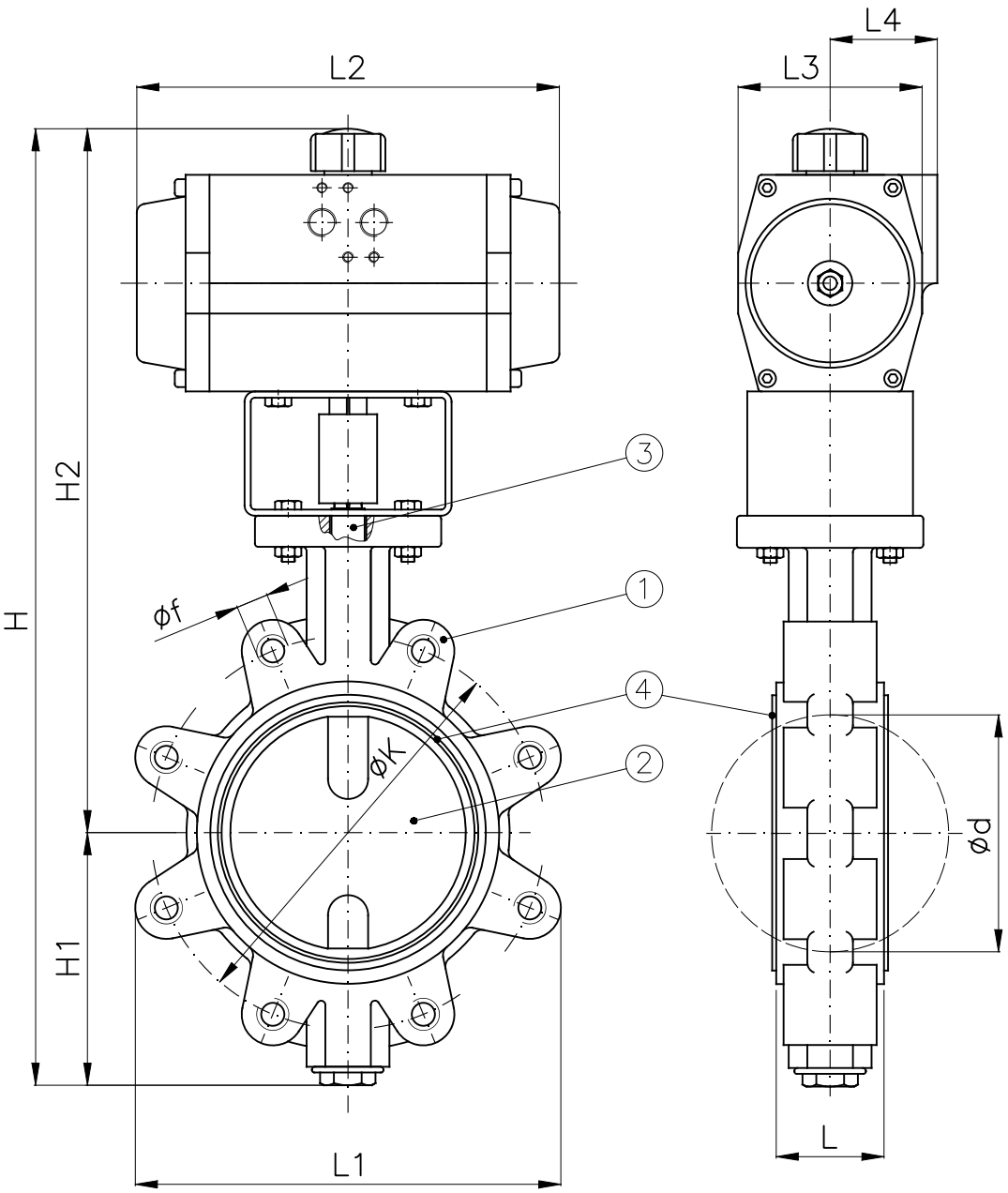

Pos.	Descrizione *Description*
1	Corpo *Body*
2	Disco *Disc*
3	Stelo *Stem*
4	Sede di tenuta *Disc seat ring*

Per combinazioni materiali, campo di applicazione, caratteristiche delle sedi di tenuta consultare Tab.203.2

For materials' combination, application range and seats' characteristics consult Tab.203.2

DA: DOUBLE ACTING SR: SIMPLE ACTING (spring return)

												PN6–NP6			PN10–NP10			PN16–NP16			ANSI150			
DN		Pneumatic Actuator	d	H	H1	H2	L	L1	L2	L3	L4	K	f	Holes No. f	K	f	Holes No. f	K	f	Holes No. f	K	f	Holes No. f	Weight (Kg)
40	1"1/2	AP2 DA	45.9	351	90	261	33	111	155	81	44.5	100	M12	4	110	M16	4	110	M16	4	98.5	M14	4	4.9
		AP2 SR																						5.4
50	2"	AP2 DA	56.6	368	96	272	43	120	155	81	44.5	110	M12	4	125	M16	4	125	M16	4	120.5	M18	4	6.1
		AP3 SR		385		289			213	92	49.5													7.6
65	2"1/2	AP3 DA	70.5	410	108	302	46	138	213	92	49.5	130	M12	4	145	M16	4	145	M16	4	139.5	M18	4	9
		AP4 SR		435		327			276	113	58													12
80	3"	AP3 DA	83.3	430	118	312	46	150	213	92	49.5	150	M16	4	160	M16	8	160	M16	8	152.4	M18	4	9.7
		AP4 SR		455		337			276	113	58													12.7
100	4"	AP3.5 DA	105	475	132	343	52	213	236	102	53	170	M16	4	180	M16	8	180	M16	8	190.5	M18	8	12.5
		AP4.5 SR		517		385			310	133	69													18
125	5"	AP4 DA	127.7	532	150	382	56	243	276	113	58	200	M16	8	210	M16	8	210	M16	8	216	M20	8	17.1
		AP5 SR		572		422			366	140	–													24.1
150	6"	AP4.5 DA	152.2	591	165	426	56	267	310	133	–	225	M16	8	240	M20	8	240	M20	8	241.5	M20	8	21.1
		AP5.5 SR		645		480			388	160														31.6
200	8"	AP5 DA	197.6	664	194	470	60	320	366	140	–	280	M16	8	295	M20	8	295	M20	12	298.5	M20	8	29.7
		AP6 SR		729		535			468	175														43.2
250	10"	AP5.5 DA	245.9	781	220	561	68	402	388	160	–	335	M16	12	350	M20	12	355	M24	12	362	M22	12	51.9
		AP8 SR		895		675			563	215														83.9
300	12"	AP6 DA	298.2	869	262	607	78	473	468	175	–	395	M20	12	400	M20	12	410	M24	12	432	M22	12	63.6
		AP8 SR		959		697			563	215														97.6

Valvole a farfalla tipo Lug PN6 - PN10DIN - PN16 - ANSI150 con motore elettrico

Butterfly valves Lug type NP6 - NP10DIN - NP16 - ANSI150 with electric motor

Tab.203.2
ME/BER

Conform to:

API STD 609
MSS SP 67
ANSI B16.5
ANSI B16.34
DIN3202
ISO 5752
UNI EN 1092

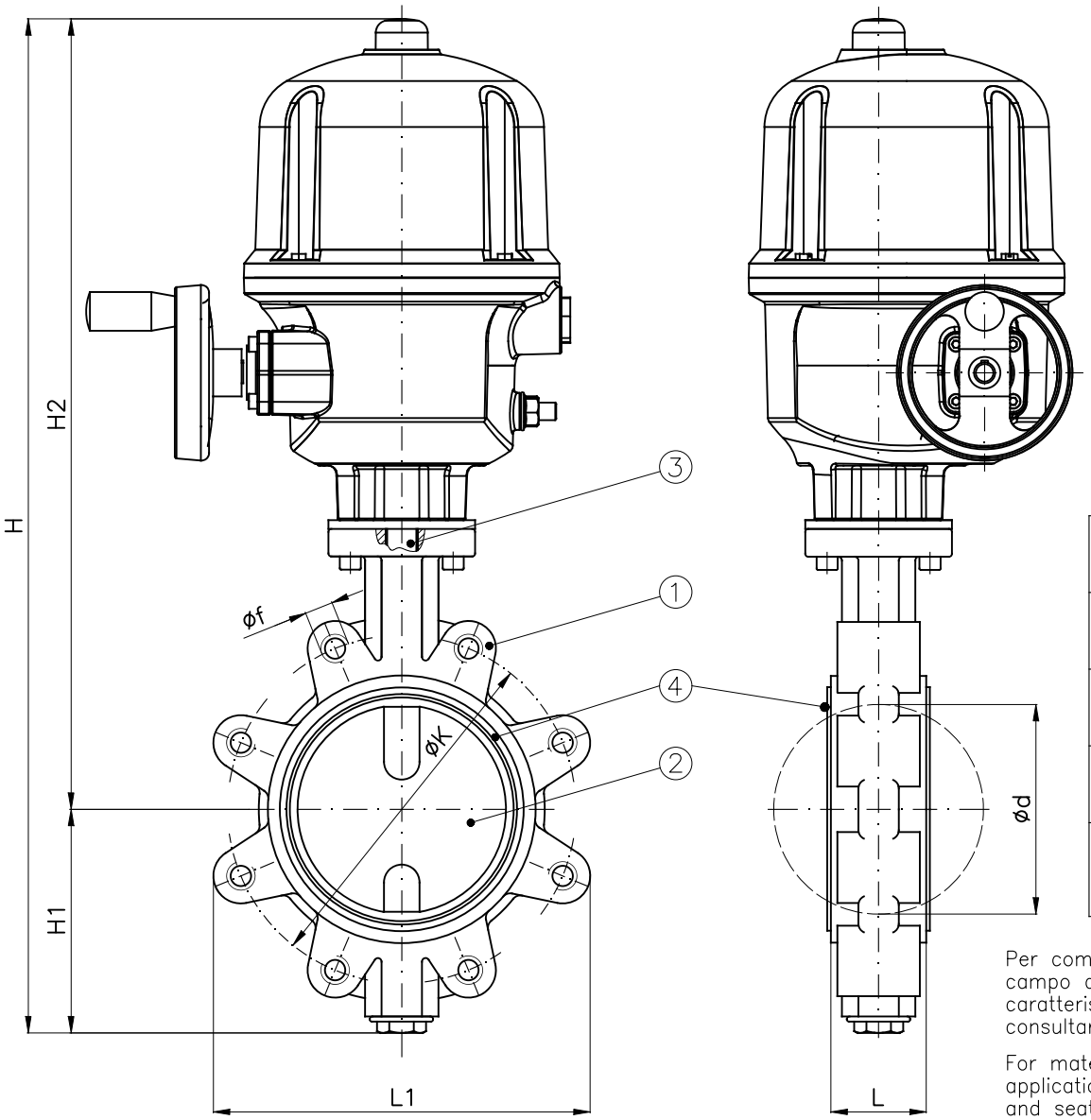

Pos.	Descrizione *Description*
1	Corpo *Body*
2	Disco *Disc*
3	Stelo *Stem*
4	Sede di tenuta *Disc seat ring*

Per combinazioni materiali, campo di applicazione, caratteristiche delle sedi di tenuta consultare Tab.203.2

For materials' combination, application range and seats' characteristics consult Tab.203.2

									PN6–NP6			PN10–NP10			PN16–NP16			ANSI150			
DN		Electric Motor	d	H	H1	H2	L	L1	K	f	Holes No. f	K	f	Holes No. f	K	f	Holes No. f	K	f	Holes No. f	Weight (Kg)
40	1"1/2	AQ5	45.9	474	90	384	33	111	100	M12	4	110	M16	4	110	M16	4	98.5	M14	4	13
50	2"	AQ5	56.6	491	96	395	43	120	110	M12	4	125	M16	4	125	M16	4	120.5	M18	4	13.5
65	2"1/2	AQ10	70.5	516	108	408	46	138	130	M12	4	145	M16	4	145	M16	4	139.5	M18	4	15
80	3"	AQ10	83.3	536	118	418	46	150	150	M16	4	160	M16	8	160	M16	8	152.4	M18	4	15.5
100	4"	AQ10	105	571	132	439	52	213	170	M16	4	180	M16	8	180	M16	8	190.5	M18	8	17
125	5"	AQ15	127.7	613	150	463	56	243	200	M16	8	210	M16	8	210	M16	8	216	M20	8	20
150	6"	AQ15	152.2	645	165	480	56	267	225	M16	8	240	M20	8	240	M20	8	241.5	M20	8	21.5
200	8"	AQ30	197.6	747	194	553	60	320	280	M16	8	295	M20	8	295	M20	12	298.5	M20	8	32
250	10"	AQ50	245.9	823	220	603	68	402	335	M16	12	350	M20	12	355	M24	12	362	M22	12	42.5

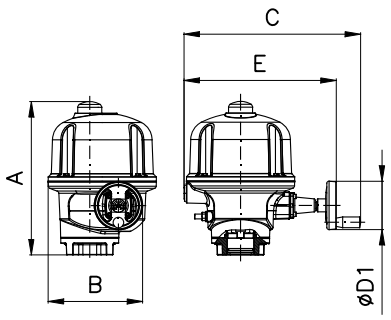

	A	B	C	E	øD1
AQ5/10/15	286	184	276	225	100
AQ30	328	260	427	347	160
AQ50	328	260	427	347	200

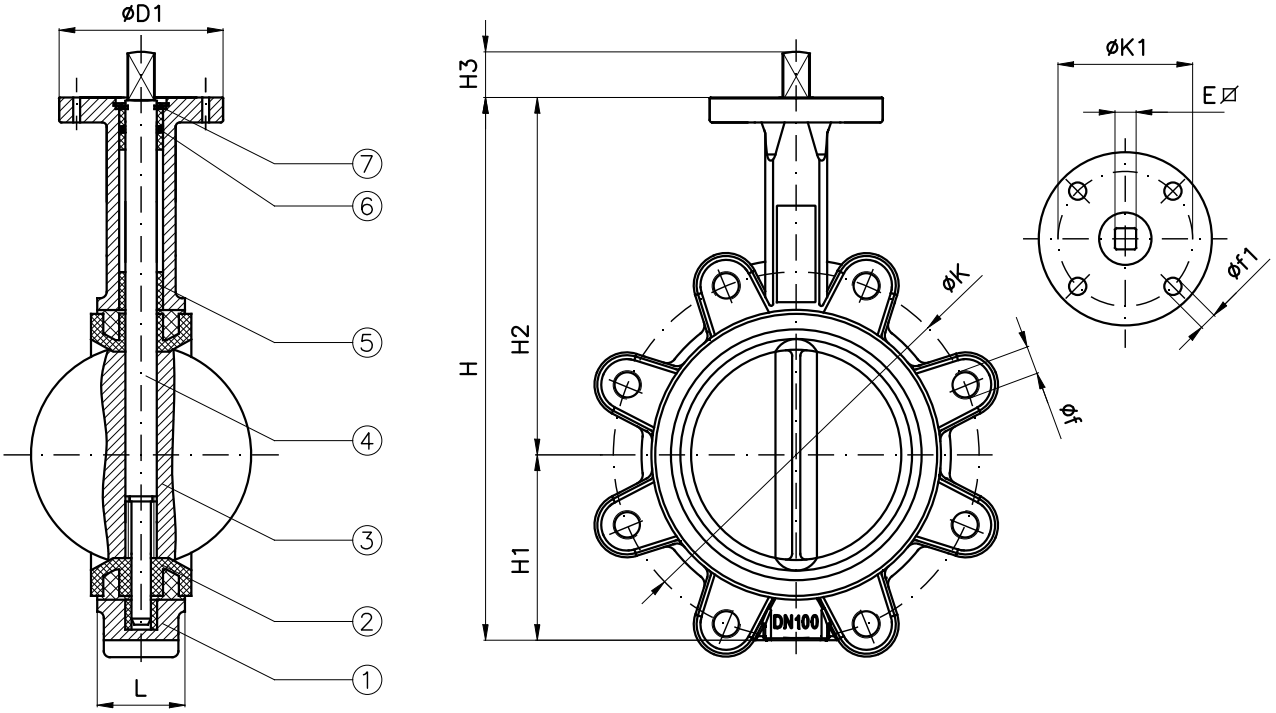

- Working pressure: 6/16bar.
- F to F DIM.ACC.to EN 558-1 SERIES20.
- Top-Flange ACC.to ISO5211.
- Fitting between flanges: DIN PN6/16

						PN6			PN16								
DN	H	H1	H2	H3	L	K	f	Holes NO. f	K	f	Holes NO. f	D1	K1	f1	Holes NO. f1	E⌀	Top Flange
40	179	63	116	32	33	100	M12	4	110	M16	4	65	50	7	4	9	F05
50	188	62	126	32	43	110	M12	4	125	M16	4	65	50	7	4	9	
65	205	69	136	32	46	130	M12	4	145	M16	4	65	50	7	4	9	
80	227	77	150	32	46	150	M16	4	160	M16	8	65	50	7	4	9	
100	266	96	170	32	52	170	M16	4	180	M16	8	65	50	10	4	11	
125	294	114	180	32	56	200	M16	8	210	M16	8	90	70	10	4	14	F07
150	328	128	200	32	56	225	M16	8	240	M20	8	90	70	10	4	14	
200	394.5	166	228.5	37	60	280	M16	8	295	M20	12	125	102	12	4	17	F10
250	468	202	266	37	68	335	M16	12	355	M24	12	150	125	14	4	22	F12
300	527	235	292	37	78	395	M20	12	410	M24	12	150	125	14	4	22	

Combinazioni materiali standard – Standard materials combination				
		GS/316	GS/BA	BA/BA
Pos.	Descrizione Description	Materiale Material	Materiale Material	Materiale Material
1	Corpo Body	Ghisa sferoidale Nodular cast iron	Ghisa sferoidale Nodular cast iron	Bronzo alluminio Alluminum bronze
2	Sede Seat	NBR	NBR	NBR
3	Disco Disc	Acciaio Inox CF8M Stainless steel CF8M	Bronzo alluminio Alluminum bronze	Bronzo alluminio Alluminum bronze
4	Stelo Stem	Acciaio Inox Stainless steel	Acciaio Inox Stainless steel	Acciaio Inox Stainless steel
5	Boccola Bushing	P.T.F.E.	P.T.F.E.	P.T.F.E.
6	O-ring	NBR	NBR	NBR
7	Rondella Card	Acciaio carbonio zincato Galvanized carbon steel	Acciaio carbonio zincato Galvanized carbon steel	Acciaio carbonio zincato Galvanized carbon steel

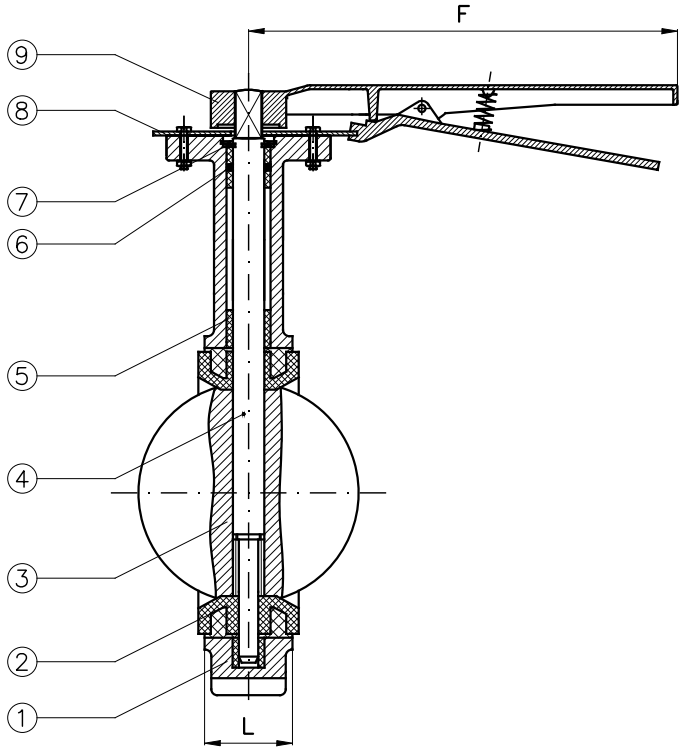

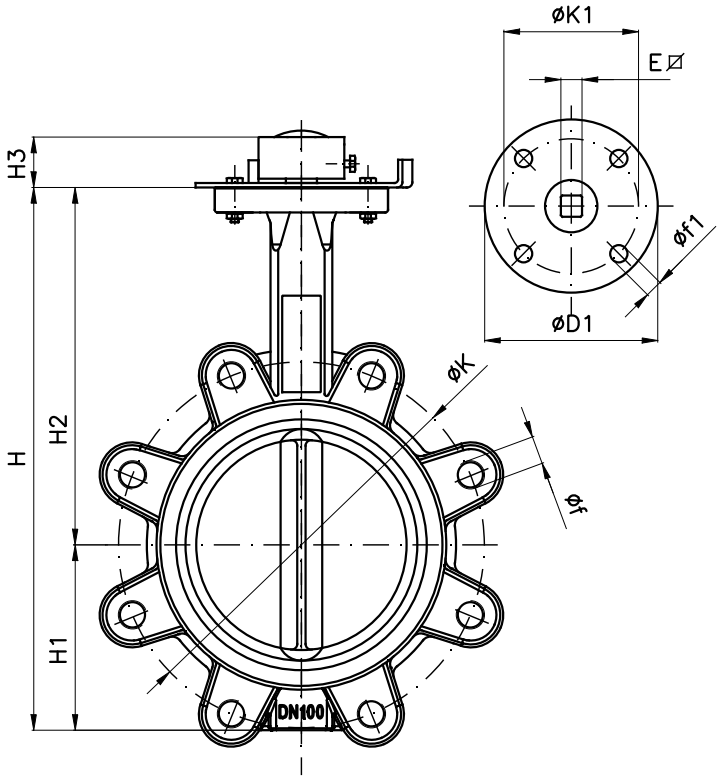

- Working pressure: 6/16bar.
- F to F DIM.ACC.to EN 558-1 SERIES20.
- Top-Flange ACC.to ISO5211.
- Fitting between flanges: DIN PN6/16

							PN6			PN16								
DN	H	H1	H2	H3	L	F	K	f	Holes NO. f	K	f	Holes NO. f	D1	K1	f1	Holes NO. f1	E⌀	Top Flange
40	179	63	116	32	33	258	100	M12	4	110	M16	4	65	50	7	4	9	F05
50	188	62	126	32	43	258	110	M12	4	125	M16	4	65	50	7	4	9	
65	205	69	136	32	46	258	130	M12	4	145	M16	4	65	50	7	4	9	
80	227	77	150	32	46	258	150	M16	4	160	M16	8	65	50	7	4	9	
100	266	96	170	32	52	258	170	M16	4	180	M16	8	65	50	10	4	11	
125	294	114	180	32	56	258	200	M16	8	210	M16	8	90	70	10	4	14	F07
150	328	128	200	32	56	258	225	M16	8	240	M20	8	90	70	10	4	14	
200	394.5	166	228.5	37	60	358	280	M16	8	295	M20	12	125	102	12	4	17	F10
250	468	202	266	37	68	358	335	M16	12	355	M24	12	150	125	14	4	22	F12
300	527	235	292	37	78	358	395	M20	12	410	M24	12	150	125	14	4	22	

Combinazioni materiali standard – Standard materials combination				
		GS/316	GS/BA	BA/BA
Pos.	Descrizione Description	Materiale Material	Materiale Material	Materiale Material
1	Corpo Body	Ghisa sferoidale Nodular cast iron	Ghisa sferoidale Nodular cast iron	Bronzo alluminio Alluminum bronze
2	Sede Seat	NBR	NBR	NBR
3	Disco Disc	Acciaio Inox CF8M Stainless steel CF8M	Bronzo alluminio Alluminum bronze	Bronzo alluminio Alluminum bronze
4	Stelo Stem	Acciaio Inox Stainless steel	Acciaio Inox Stainless steel	Acciaio Inox Stainless steel
5	Boccola Bushing	P.T.F.E.	P.T.F.E.	P.T.F.E.
6	O-ring	NBR	NBR	NBR
7	Rondella Card	Acciaio carbonio zincato Galvanized carbon steel	Acciaio carbonio zincato Galvanized carbon steel	Acciaio carbonio zincato Galvanized carbon steel
8	Piastra Plate	Acciaio carbonio zincato Galvanized carbon steel	Acciaio carbonio zincato Galvanized carbon steel	Acciaio carbonio zincato Galvanized carbon steel
9	Maniglia Handle	Acciaio Steel	Acciaio Steel	Acciaio Steel

Valvole a farfalla tipo Lug PN6 - PN16

Butterfly valves Lug type NP6 - NP16

Tab.203C-LU

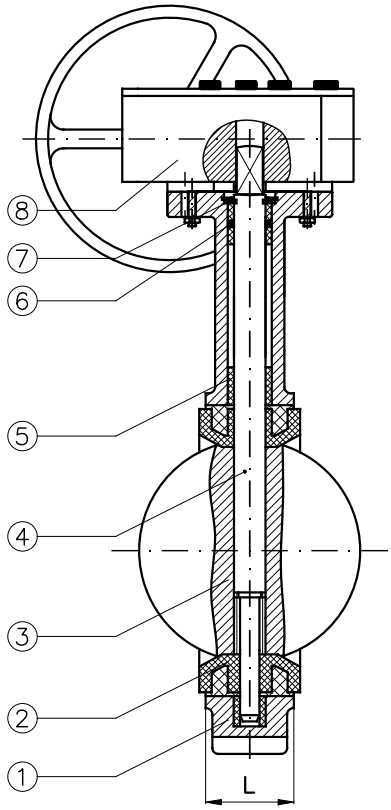

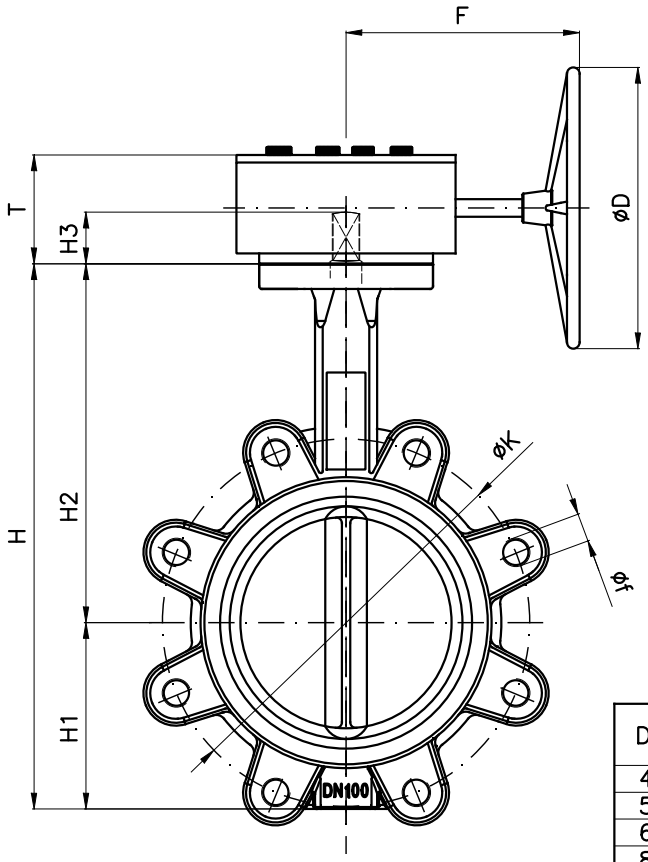

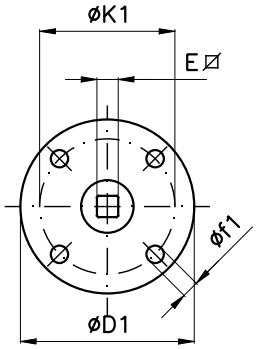

DN	F	T	D
40	160	68	150
50	160	68	150
65	160	68	150
80	160	68	150
100	160	68	150
125	160	68	150
150	160	68	150
200	227	72	285
250	227	72	285
300	227	72	285

- Working pressure: 6/16bar.
- F to F DIM.ACC.to EN 558-1 SERIES20.
- Top-Flange ACC.to ISO5211.
- Fitting between flanges: DIN PN6/16

						PN6			PN16								
DN	H	H1	H2	H3	L	K	f	Holes NO. f	K	f	Holes NO. f	D1	K1	f1	Holes NO. f1	E⌀	Top Flange
40	179	63	116	32	33	100	M12	4	110	M16	4	65	50	7	4	9	F05
50	188	62	126	32	43	110	M12	4	125	M16	4	65	50	7	4	9	
65	205	69	136	32	46	130	M12	4	145	M16	4	65	50	7	4	9	
80	227	77	150	32	46	150	M16	4	160	M16	8	65	50	7	4	9	
100	266	96	170	32	52	170	M16	4	180	M16	8	65	50	10	4	11	
125	294	114	180	32	56	200	M16	8	210	M16	8	90	70	10	4	14	F07
150	328	128	200	32	56	225	M16	8	240	M20	8	90	70	10	4	14	
200	394.5	166	228.5	37	60	280	M16	8	295	M20	12	125	102	12	4	17	F10
250	468	202	266	37	68	335	M16	12	355	M24	12	150	125	14	4	22	F12
300	527	235	292	37	78	395	M20	12	410	M24	12	150	125	14	4	22	

Combinazioni materiali standard – Standard materials combination				
		GS/316	GS/BA	BA/BA
Pos.	Descrizione Description	Materiale Material	Materiale Material	Materiale Material
1	Corpo Body	Ghisa sferoidale Nodular cast iron	Ghisa sferoidale Nodular cast iron	Bronzo alluminio Alluminum bronze
2	Sede Seat	NBR	NBR	NBR
3	Disco Disc	Acciaio Inox CF8M Stainless steel CF8M	Bronzo alluminio Alluminum bronze	Bronzo alluminio Alluminum bronze
4	Stelo Stem	Acciaio Inox Stainless steel	Acciaio Inox Stainless steel	Acciaio Inox Stainless steel
5	Boccola Bushing	P.T.F.E.	P.T.F.E.	P.T.F.E.
6	O-ring	NBR	NBR	NBR
7	Rondella Card	Acciaio carbonio zincato Galvanized carbon steel	Acciaio carbonio zincato Galvanized carbon steel	Acciaio carbonio zincato Galvanized carbon steel
8	Riduttore Gear	–	–	–

Valvole a farfalla tipo Lug PN6 - PN16 con motore elettrico

Butterfly valves Lug type NP6 - NP16 with electric motor

Tab.203C-LU ME/AOX

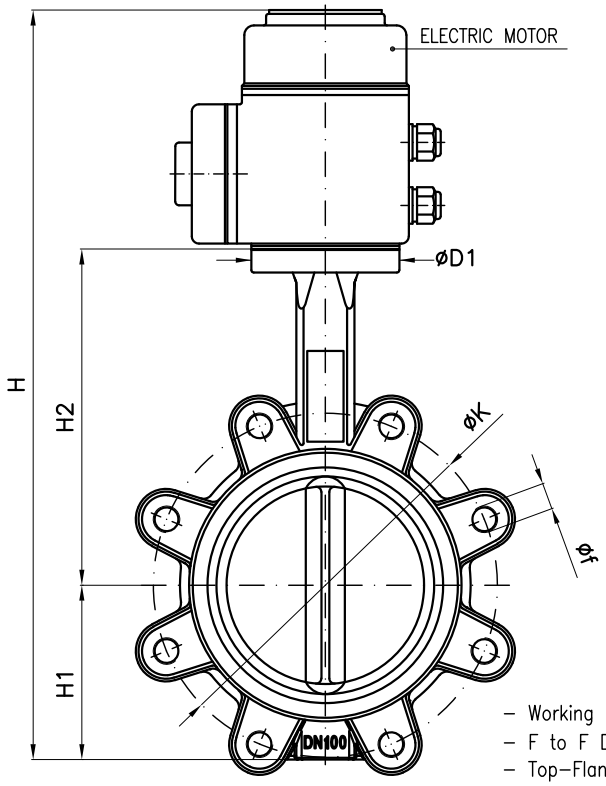

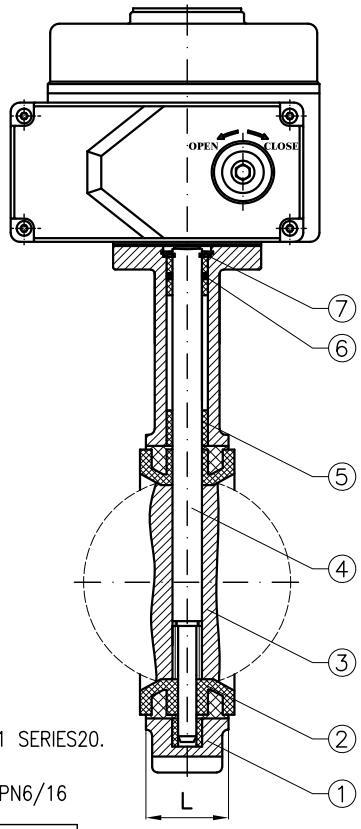

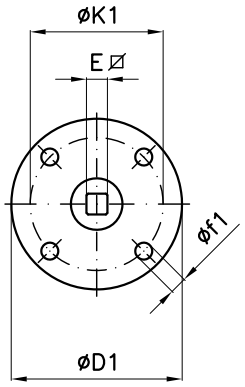

- Working pressure: 6/16bar.
- F to F DIM.ACC.to EN 558-1 SERIES20.
- Top-Flange ACC.to ISO5211.
- Fitting between flanges: DIN PN6/16

					GS/316 – GS/BA				BA/BA											
DN	H (~)	H1	H2	L	D1	K1	f1	Top Flange	D1	K1	f1	Top Flange	Holes NO. f1	E⌀	Electric Motor	L2	L3	L4	L5
40	295	63	116	33	90	70	10		65	50	7		4	9	AOX-003	123	113	100	25
50	305	62	126	43	90	70	10		65	50	7		4	9	AOX-003	123	113	100	25
65	330	69	136	46	90	70	10		65	50	7	F05	4	9	AOX-005	160	121	121	25
80	350	77	150	46	90	70	10	F07	65	50	7		4	9	AOX-005	160	121	121	25
100	390	96	170	52	90	70	10		65	50	7		4	11	AOX-008	160	121	121	25
125	425	114	180	56	90	70	10		90	70	10	F07	4	14	AOX-015	189	129	145	25
150	460	128	200	56	90	70	10		90	70	10		4	14	AOX-015	189	129	145	25
200	560	166	228.5	60	125	102	12	F10	125	102	12	F10	4	17	AOX-020	268	164	200	25
250	635	202	266	68	125	102	12		150	125	14	F12	4	22	AOX-040	268	164	200	25
300	695	235	292	78	150	125	14	F12	150	125	14		4	22	AOX-060	268	164	200	25

	PN6			PN16		
DN	K	f	Holes NO. f	K	f	Holes NO. f
40	100	M12	4	110	M16	4
50	110	M12	4	125	M16	4
65	130	M12	4	145	M16	4
80	150	M16	4	160	M16	8
100	170	M16	4	180	M16	8
125	200	M16	8	210	M16	8
150	225	M16	8	240	M20	8
200	280	M16	8	295	M20	12
250	335	M16	12	355	M24	12
300	395	M20	12	410	M24	12

ELECTRIC MOTOR

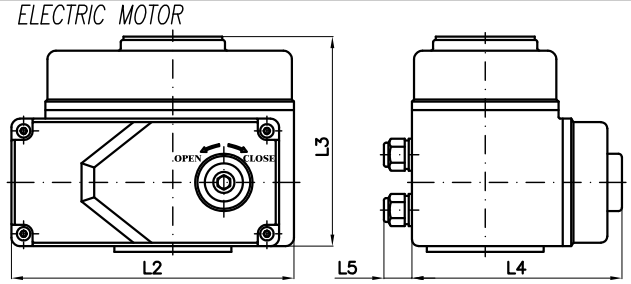

La scelta del motore dipende dalla pressione di esercizio dell'impianto

The choice of the motor depends from plant working pressure

Combinazioni materiali standard – Standard materials combination				
		GS/316	GS/BA	BA/BA
Pos.	Descrizione Description	Materiale Material	Materiale Material	Materiale Material
1	Corpo Body	Ghisa sferoidale Nodular cast iron	Ghisa sferoidale Nodular cast iron	Bronzo alluminio Alluminum bronze
2	Sede Seat	NBR	NBR	NBR
3	Disco Disc	Acciaio Inox CF8M Stainless steel CF8M	Bronzo alluminio Alluminum bronze	Bronzo alluminio Alluminum bronze
4	Stelo Stem	Acciaio Inox Stainless steel	Acciaio Inox Stainless steel	Acciaio Inox Stainless steel
5	Boccola Bushing	P.T.F.E.	P.T.F.E.	P.T.F.E.
6	O-ring	NBR	NBR	NBR
7	Rondella Card	Acciaio carbonio zincato Galvanized carbon steel	Acciaio carbonio zincato Galvanized carbon steel	Acciaio carbonio zincato Galvanized carbon steel

Valvole a farfalla doppia flangia - PN6 - PN10 - PN16
Butterfly valves double flanged type - NP6 - NP10 - NP16

Tab.WV16

Conform to:
UNI EN1092

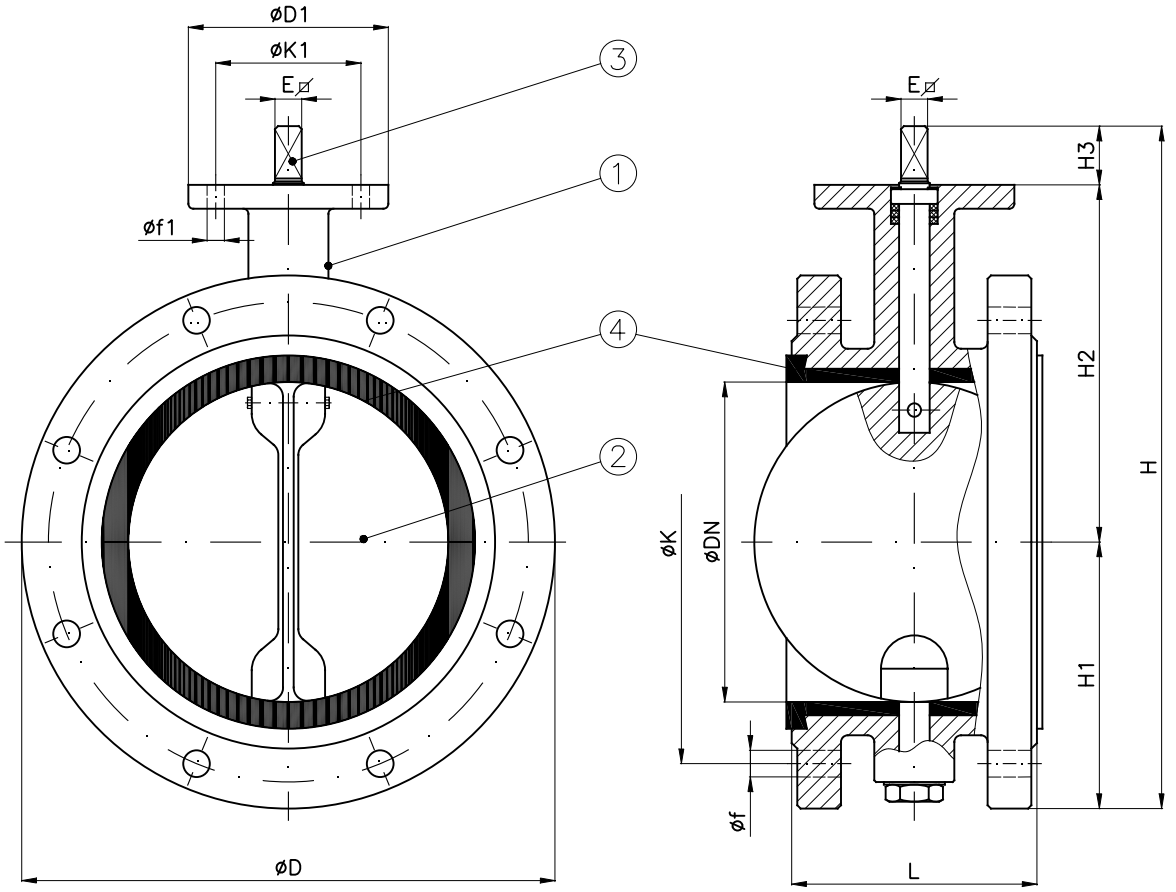

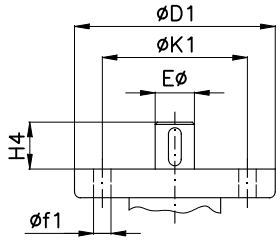

DN50÷300
SQUARE SHAFT

DN≥350
ROUND SHAFT
2x KEYWAY 180°

															PN6 – NP6				PN10 – NP10				PN16 – NP16			
DN		E ⌀	Eø	H (~)	H1	H2	H3	H4	L	D1	K1	f1	Holes No. f1	Weight (Kg)	D	K	f	Holes No. f	D	K	f	Holes No. f	D	K	f	Holes No. f
50	2"	12	–	235	70	128	37	–	108	90	66	9	4	9	140	110	14	4	165	125	18	4	165	125	18	4
65	2"1/2	12	–	253	80	136	37	–	112	90	66	9	4	11	160	130	14	4	185	145	18	4	185	145	18	4
80	3"	12	–	269	88	144	37	–	114	90	66	9	4	14	190	150	18	4	200	160	18	8	200	160	18	8
100	4"	12	–	289	98	154	37	–	127	90	66	9	4	16	210	170	18	4	220	180	18	8	220	180	18	8
125	5"	16	–	335	114	184	37	–	140	130	80	11	4	24	240	200	18	8	250	210	18	8	250	210	18	8
150	6"	16	–	355	124	194	37	–	140	130	80	11	4	27	265	225	18	8	285	240	22	8	285	240	22	8
200	8"	16	–	446	180	229	37	–	152	130	80	11	4	38	320	280	18	8	340	295	22	8	340	295	22	12
250	10"	24	–	488	190	261	37	–	165	175	135	14	4	60	375	335	18	12	395	350	22	12	405	355	26	12
300	12"	24	–	543	220	286	37	–	178	175	135	14	4	70	440	395	22	12	445	400	22	12	460	410	26	12
350	14"	–	35	632	260	322	–	50	190	175	135	14	4	90	490	445	22	12	505	460	22	16	520	470	26	16
400	16"	–	40	692	280	352	–	60	216	175	135	14	4	115	540	495	22	16	565	515	26	16	580	525	30	16
450	18"	–	45	765	325	380	–	60	222	175	135	14	4	130	595	550	22	16	615	565	26	20	640	585	30	20
500	20"	–	45	820	340	420	–	60	229	175	135	14	4	180	645	600	22	20	670	620	26	20	715	650	33	20
600	24"	–	60	963	425	468	–	70	267	210	165	22	4	260	755	705	26	20	780	725	30	20	840	770	36	20
700	28"	–	70	1082	464	533	–	85	292	300	254	18	8	295	860	810	26	24	895	840	30	24	910	840	36	24

Combinazione materiali standard – Standard materials Combination			
		GS/316	GS/BA
ITEM	DENOMINAZIONE DENOMINATION	MATERIALE MATERIAL	MATERIALE MATERIAL
01	Body	Nodular cast iron GGG40	Nodular cast iron GGG40
02	Disc	Stainless steel AISI316 UNI EN10088	Aluminum–Bronze ASTM B148
03	Stem	Stainless steel AISI316 UNI EN10088	Stainless steel AISI316 UNI EN10088
04	Disc seat ring	BUNA or EPDM	BUNA or EPDM

Nota: Combinazioni materiali non standard a richiesta
Note: Non standard materials combinations on request

Valvole a farfalla doppia flangia - PN6 - PN10 - PN16
Butterfly valves double flanged type - NP6 - NP10 - NP16

Tab.WV70

Conform to:
UNI EN1092

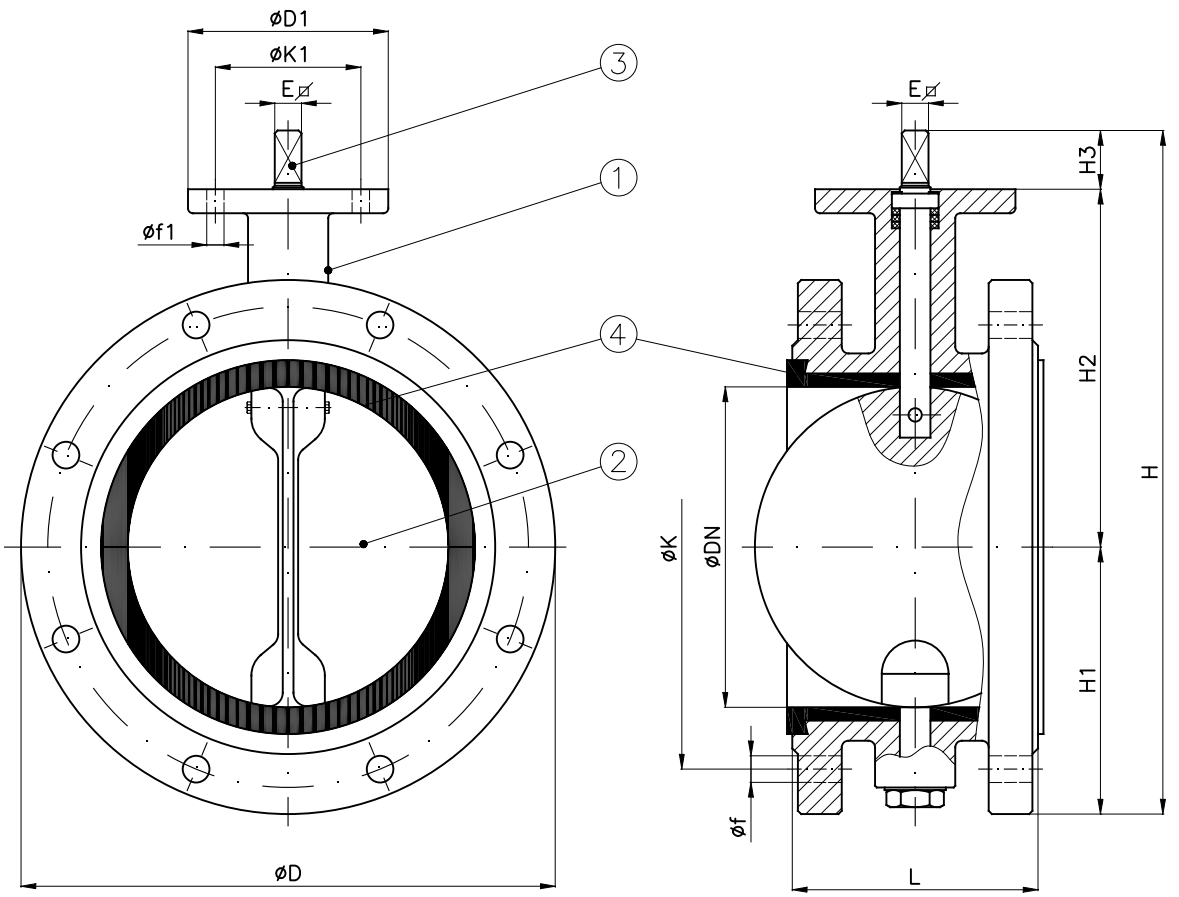

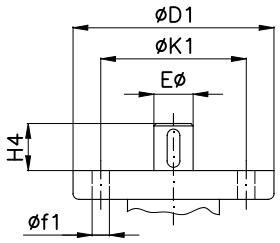

DN50÷300
SQUARE SHAFT

DN≥350
ROUND SHAFT
2x KEYWAY 180°

DN		E ⌀	Eø	H (~)	H1	H2	H3	H4	L	D1	K1	f1	Holes No. f1	Weight (Kg)	PN6 – NP6 D	PN6 – NP6 K	PN6 – NP6 f	PN6 – NP6 Holes No. f	PN10 – NP10 D	PN10 – NP10 K	PN10 – NP10 f	PN10 – NP10 Holes No. f	PN16 – NP16 D	PN16 – NP16 K	PN16 – NP16 f	PN16 – NP16 Holes No. f
50	2"	12	–	235	70	128	37	–	120	90	66	9	4	9	140	110	14	4	165	125	18	4	165	125	18	4
65	2"1/2	12	–	253	80	136	37	–	120	90	66	10	4	11	160	130	14	4	185	145	18	4	185	145	18	4
80	3"	12	–	269	88	144	37	–	120	90	66	11	4	14	190	150	18	4	200	160	18	8	200	160	18	8
100	4"	12	–	289	98	154	37	–	120	90	66	11	4	16	210	170	18	4	220	180	18	8	220	180	18	8
125	5"	16	–	335	114	184	37	–	130	110	80	11	4	24	240	200	18	8	250	210	18	8	250	210	18	8
150	6"	16	–	355	124	194	37	–	130	110	80	11	4	27	265	225	18	8	285	240	22	8	285	240	22	8
175	7"	16	–	388	145	206	37	–	150	110	80	11	4	32	295	255	18	8	315	270	22	8	315	270	22	8
200	8"	16	–	446	180	229	37	–	150	130	80	11	4	38	320	280	18	8	340	295	22	8	340	295	22	12
250	10"	24	–	488	190	261	37	–	160	175	135	14	4	60	375	335	18	12	395	350	22	12	405	355	26	12
300	12"	24	–	543	220	286	37	–	180	175	135	14	4	70	440	395	22	12	445	400	22	12	460	410	26	12
350	14"	–	35	632	260	322	–	50	180	175	135	14	4	90	490	445	22	12	505	460	22	16	520	470	26	16
400	16"	–	40	692	280	352	–	60	220	175	135	14	4	115	540	495	22	16	565	515	26	16	580	525	30	16
450	18"	–	45	765	325	380	–	60	220	175	135	14	4	130	595	550	22	16	615	565	26	20	640	585	30	20
500	20"	–	45	820	340	420	–	60	220	175	135	14	4	180	645	600	22	20	670	620	26	20	715	650	33	20
600	24"	–	60	963	425	468	–	70	220	210	165	22	4	260	755	705	26	20	780	725	30	20	840	770	36	20
700	28"	–	70	1082	464	533	–	85	220	300	254	18	8	295	860	810	26	24	895	840	30	24	910	840	36	24

Combinazione materiali standard – Standard materials Combination			
		GS/316	GS/BA
ITEM	DENOMINAZIONE DENOMINATION	MATERIALE MATERIAL	MATERIALE MATERIAL
01	Body	Nodular cast iron GGG40	Nodular cast iron GGG40
02	Disc	Stainless steel AISI316 UNI EN10088	Aluminum–Bronze ASTM B148
03	Stem	Stainless steel AISI316 UNI EN10088	Stainless steel AISI316 UNI EN10088
04	Disc seat ring	BUNA or EPDM	BUNA or EPDM

Nota: Combinazioni materiali non standard a richiesta
Note: Non standard materials combinations on request

Valvole a farfalla doppio eccentrico PN10DIN - PN16 - PN25 - ANSI150

Butterfly valves double eccentric NP10DIN - NP16 - NP25 - ANSI150

Tab.401

Conform to:
UNI EN1092
B16.47
B16.5
UNI EN1092
API 609

da DN80 a DN300
ND80 from to ND300

da DN350 a DN700
ND350 from to ND700

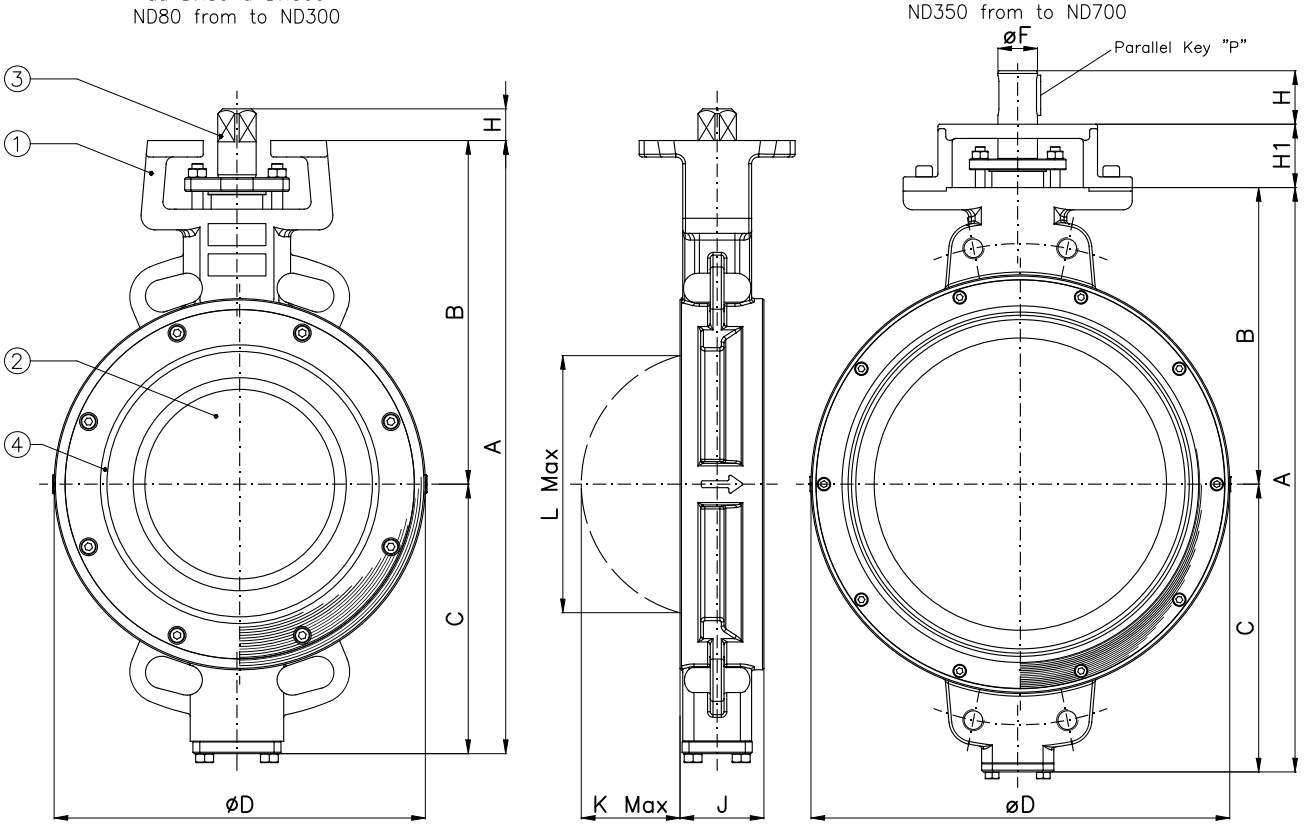

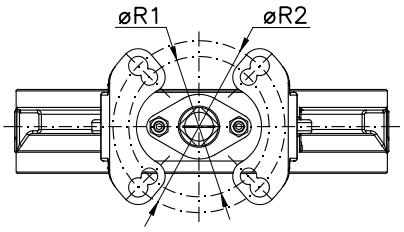

Top Mounting View

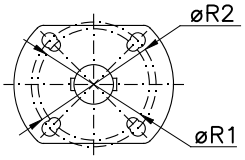

DN		A	B	C	D	F	J	H	H1	L Max	K Max	P	R1	R2	SxS	Weight (Kg)
80	3"	290	171	119	127	–	46	15	–	62.5	17.8	–	F07	F10	14x14	6.8
100	4"	322	188	134	157	–	52	15	–	89.2	28.6	–	F07	F10	14x14	9
125	5"	343	198.5	144.5	186	–	56	15	–	113.1	38.1	–	F07	F10	14x14	11.2
150	6"	379	218	161	215	–	56	18	–	140.4	51.2	–	F10	F12	17x17	14.9
200	8"	447	250	197	270	–	61	23	–	187.1	71.8	–	F10	F12	22x22	22.2
250	10"	535	302	233	320	–	68	23	–	236.3	94.6	–	F12	F14	22x22	32
300	12"	588	328	260	370	–	78	29	–	285.9	116.1	–	F12	F14	27x27	44.3
350	14"	603	306	297	420	35	92	60	71	330	133	8x7x45	F12	F14	–	71
400	16"	656	333	323	470	44.5	102	60	71	379	153	14x9x45	F12	F14	–	88.5
450	18"	709	368	341	532	44.5	114	60	71	426	168	14x9x45	F12	F14	–	125.6
500	20"	774	395	379	584	44.5	127	60	71	485	196	14x9x45	F12	F14	–	151.8
600	24"	929	472	457	685	55	154	90	126	565	220	16x10x80	F14	F16	–	248.5
700	28"	1057	530	527	795	55	165	90	126	665	275	16x10x80	F14	F16	–	373

Combinazione materiali standard – Standard materials Combination			
		A/316	CF8M/316
ITEM	DENOMINAZIONE DENOMINATION	MATERIALE MATERIAL	MATERIALE MATERIAL
01	Body	Cast steel ASTM A215 gr. WCB	Stainless steel CF8M ASTM A351
02	Disc	Stainless steel CF8M ASTM A351	Stainless steel CF8M ASTM A351
03	Stem	Stainless steel AISI316 UNI EN10088	Stainless steel AISI316 UNI EN10088
04	Seat	PTFE + carbographite	PTFE + carbographite
Nota:	Combinazioni materiali non standard a richiesta		
Note:	Non standard materials combinations on request		

Azionabile mediante:
Leva manuale parzializzabile (10 posizioni)
Riduttore ad ingranaggi irreversibile a volantino
Attuatore pneumatico
Attuatore elettrico
Attuatore idraulico

It can be actuated by:
10 position irreversible leverlock handle
Reduction gears with handweel
Pneumatic actuator
Electrical actuator
Hydraulic actuator

Valvole a farfalla tipo wafer doppio eccentrico PN6 omologate firesafe

Butterfly valves wafer type double eccentric NP6 firesafe design

Tab.203-SX

Conform to:

UNI EN 1092
EN 558-1
BS 5156
API 609
UNI EN 12516-2
API 607
ISO 10497

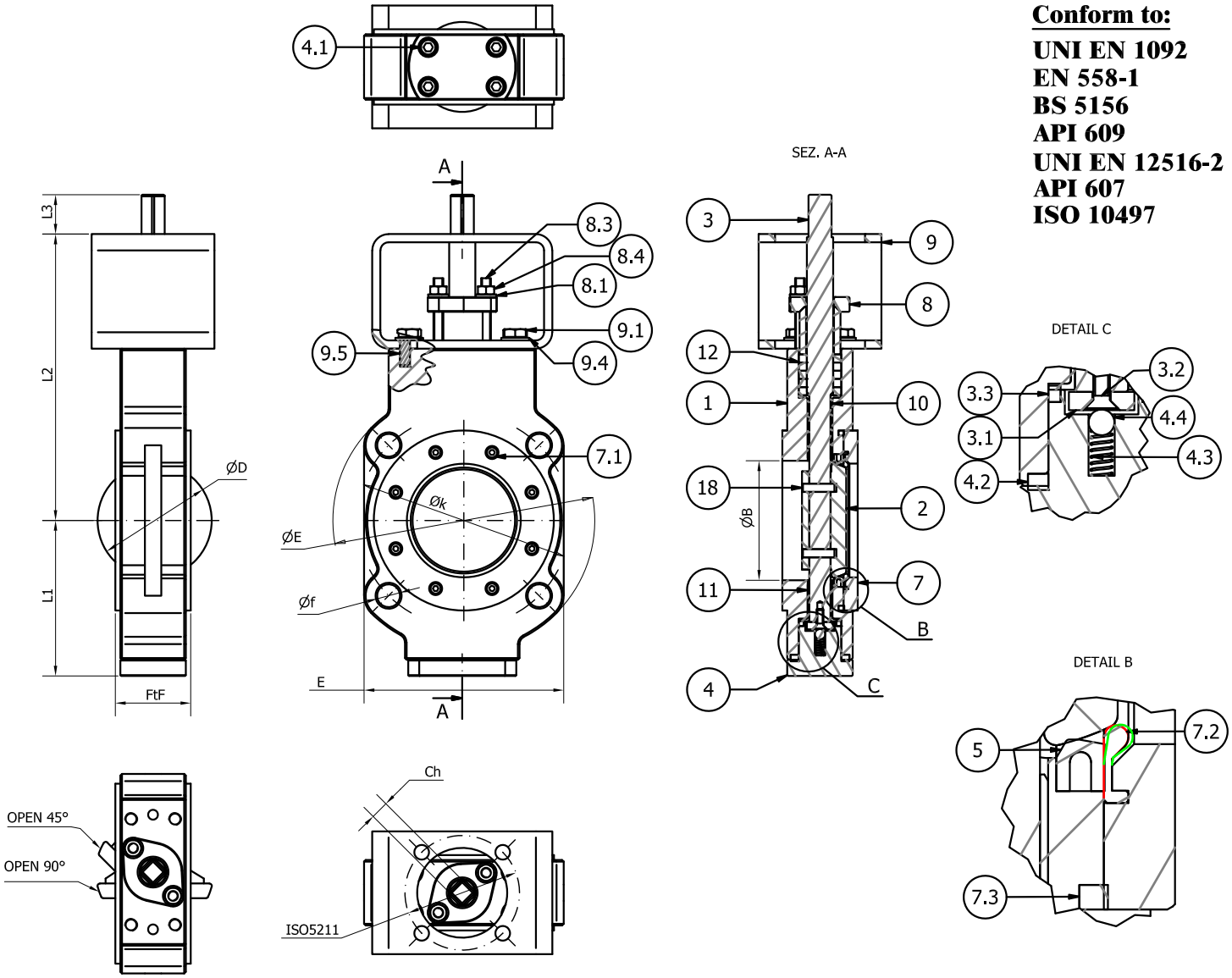

N.B.: PN16 – ANSI150 a richiesta

N.B.: On request NP16 – ANSI150

DN	CLASS	FtF	ØB	L1	L2	L3	ØD	E	ØE	Øk	Øf	HOLES NO Øf	ISO5211	Ch	WEIGHT (KG)
40/1.5"	PN6	38±1.5	46	80	160	24	43	112	130	100	14	4	F07	11x11	~5
50/2"	PN6	43±1.5	63	85	165	24	60	112	140	110	14	4	F07	11x11	~5.5
65/2.5"	PN6	46±1.5	73	95	175	24	70	127	160	130	14	4	F07	11x11	~7
80/3"	PN6	46±1.5	86	110	180	24	83	150	190	150	18	4	F07	11x11	~10
100/4"	PN6	52±1.5	110	130	200	24	107	160	210	170	18	4	F07/F10	14x14	~13

OPERATING TORQUE (Nm) AT ΔPRESSURE 6bar - S.F.=1,3						
DN/SIZE	B.T.O.	E.T.O.	RUN	B.T.C.	E.T.C.	MAST
DN40/1,5"	38	3	2	3	35	62
DN50/2"	46	4	3	4	42	62
DN65/2,5"	48	4	3	4	43	62
DN80/3"	50	4	3	4	45	62
DN100/4"	71	7	5	7	63	125

PRESSURE TEST AS PER API 598							
CLASS	SHELL HYDRO TEST (bar)	DURATION (sec.)	SEAT HYDRO TEST (bar)	DURATION (sec.)	SEAT PNEUMATIC TEST (bar)	DURATION (sec.)	TEST FLUID
PN6	9	120	7	120	6.0	60	WATER W/ CORROSION INHIBITOR

PARTS LIST			
POS.	QTY	DESCRIPTION	MATERIAL
1	1	BODY	AISI 316L
2	1	DISC	AISI 316L
3	1	STEM	AISI 316L
3.1	1	ANTIBLOW OUT DEVICE	AISI 316L
3.2	1	COUNTERSUNK HEAD SCREW (ANTI-BLOW OUT)	A4-70
3.3	1	GASKET (ANTI-BLOW OUT)	GRAPHITE
4	1	BLIND PLUG	AISI 316L
4.1	4	SOCKET HEAD CUP SCREW (BLIND PLUG)	A4-70
4.2	1	GASKET (BLIND PLUG)	GRAFITE
4.3	1	A.S. SPRING	STAINLESS STEEL
4.4	1	A.S. BALL	STAINLESS STEEL
5	1	SOFT SEAT	PTFE
7	1	RETAINING RING	AISI 316L
7.1	8-12	SOCKET HEAD CUP SCREW (RET. RING)	A4-70
7.2	1	FIRESAFE RING	AISI 316L
7.3	1	GASKET (RET. RING)	GRAPHITE
8	1	GLAND PLUG	AISI 316L
8.1	2	WASHER (GLAND PLUG)	A4-70
8.3	2	STUD BOLT (GLAND PLUG)	A4-70
8.4	2	HEX. NUT (GLAND PLUG)	A4-70
9	1	BRACKET	AISI 316L
9.1	4	HEX. BOLT (BRACKET)	A4-70
9.4	4	WASHER (BRACKET)	A4-70
9.5	2	PIN (BRAKET)	A4-70
10	1	UPPER BUSHING	CuSn12
11	1	LOWER BUSHING	CuSn12
12	1	UPPER PACKING	GRAPHITE
18	2	PIN (DISC/STEM)	XM-19

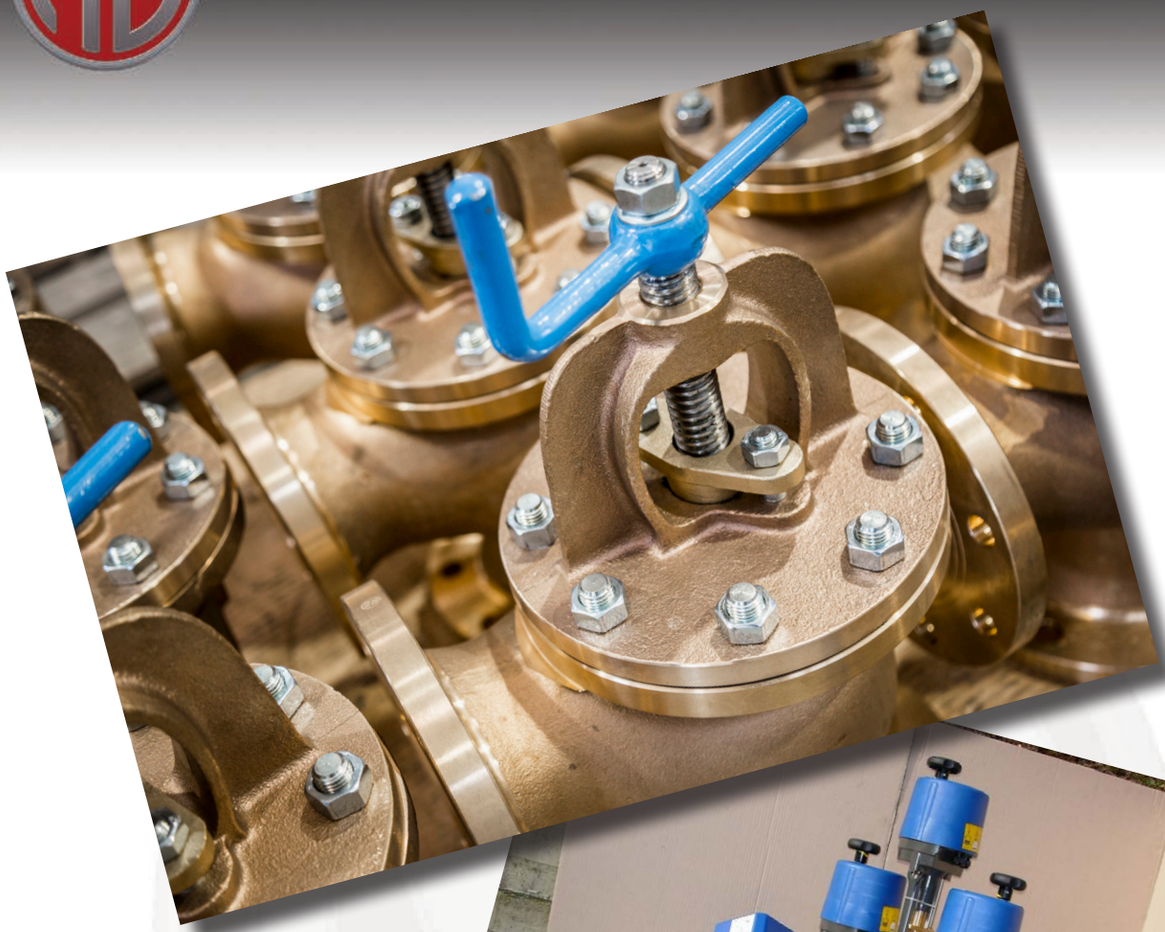

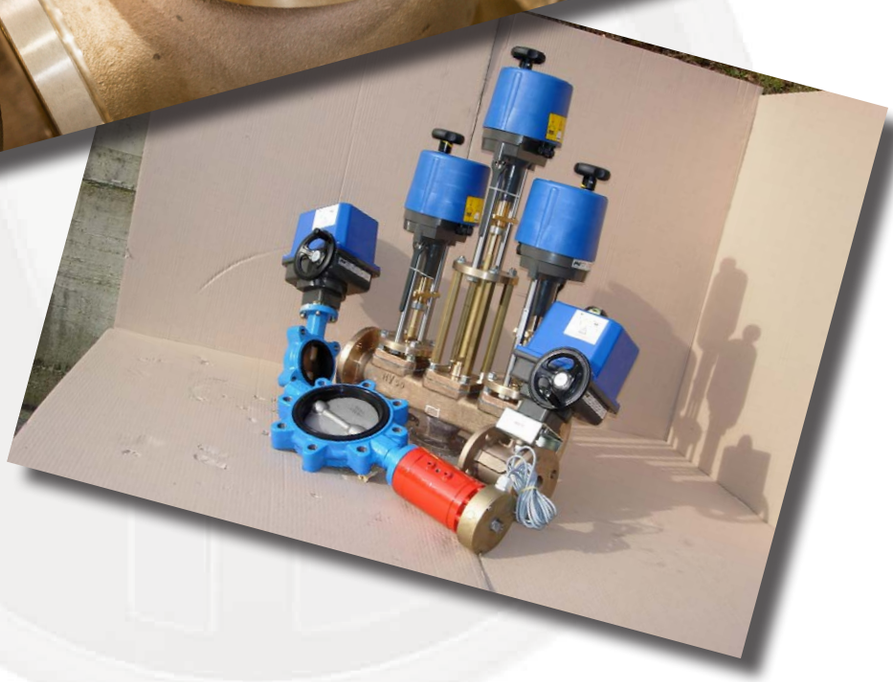

www.medanaevisca.it

Valvole di sicurezza PN6-10M.M.I.-16 via diritta e angolo retto a molla

Safety valves NP6-10M.M.I.-16 straight and angle type spring loaded

Tab.130

Conform to:
UNI EN1092

RF FLANGES: A/GS
FF FLANGES: B/G

Exec. VD

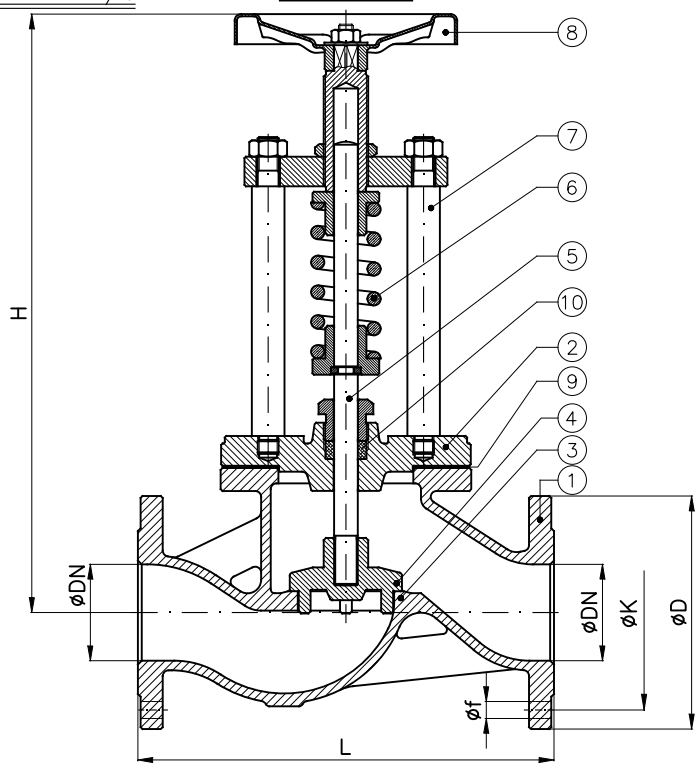

Exec. AR

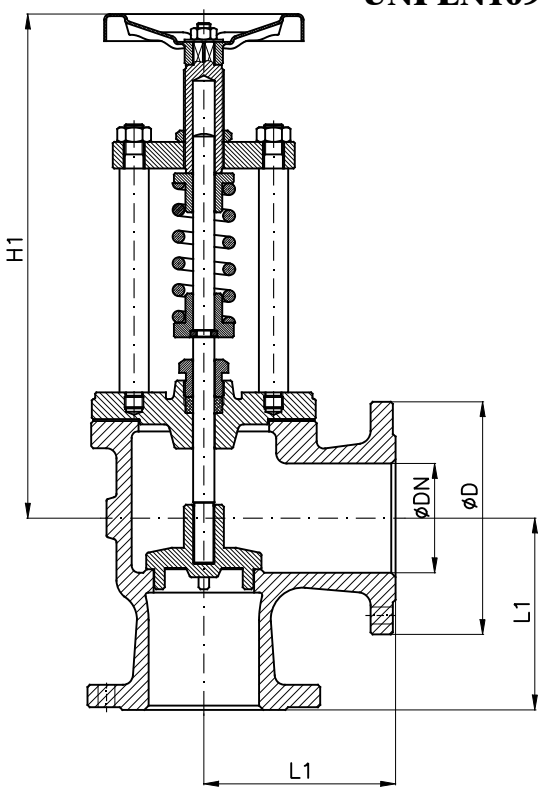

Coperchio avvitato per valvole PN10M.M.I. e PN6 DN20–32
Scruwed bonnet for valves NP10 Italian Navy and NP6 ND20–32

DN	L PN6	L PN10 M.M.I.	L PN16	H	Weight (Kg)	L1 PN6	L1 PN10 M.M.I.	L1 PN16	H1	Weight (Kg)	PN6 D	PN6 K	PN6 f	PN6 Holes NO. f	PN10M.M.I. D	PN10M.M.I. K	PN10M.M.I. f	PN10M.M.I. Holes NO. f	PN16 D	PN16 K	PN16 f	PN16 Holes NO. f
20	150	120	150	305	7	70	55	85			90	65	11	4	90	65	14	4	105	75	14	4
25	160	130	160			75	60	90	365		100	75	11	4	95	70	14	4	115	85	14	4
32	180	140	180	325	8	80	65	105	370	14	120	90	14	4	100	75	14	4	140	100	18	4
40	200	180	200	355	14.5	95	75	115	375	15	130	100	14	4	110	85	14	4	150	110	18	4
50	230	210	230	460	15	100	85	125	420		140	110	14	4	120	95	14	4	165	125	18	4
65	290	–	290	530	28	120	–	145		24	160	130	14	4	–	–	–	–	185	145	18	4
70	–	260	–			–	105	–	475		–	–	–	–	140	115	14	6	–	–	–	–
80	310	280	310	615	36	130	110	155	480	30	190	150	18	4	155	130	14	8	200	160	18	8
100	350	330	350		50	150	130	175		45	210	170	18	4	175	150	14	8	220	180	18	8
125	400	390	400	705		175	145	200		56	240	200	18	8	200	175	14	12	250	210	18	8
150	480	450	480			200	160	225			265	225	18	8	230	205	14	12	285	240	22	8
175	550	530	550			230	190	250			295	255	18	8	270	240	18	12	315	270	22	8
200	600	580	600			250	220	275			320	280	18	8	295	265	18	12	340	295	22	12

Combinazione materiali standard – Standard materials Combination

ITEM	DENOMINAZIONE DENOMINATION	A/316 MATERIALE MATERIAL	B/B MATERIALE MATERIAL	G/316 MATERIALE MATERIAL	GS/316 MATERIALE MATERIAL
01	Body	Cast steel GP240–GH UNI EN10213	Bronze UNI EN1982 G–CuSn5Zn5Pb5	Cast iron UNI EN1561 EN–GJL–250	Nodular cast iron EN–GJS–400–15U UNI EN1563
02	Bonnet	Steel Fe430B(S275JR) UNI EN10025	Bronze UNI EN1982 G–CuSn5Zn5Pb5	Steel Fe430B(S275JR) UNI EN10025	Steel Fe430B(S275JR) UNI EN10025
03	Body seat	Stainless steel AISI316 UNI EN10088	Bronze UNI EN1982 G–CuSn5Zn5Pb5	Stainless steel AISI316 UNI EN10088	Stainless steel AISI316 UNI EN10088
04	Disc (≤ DN80)	Stainless steel AISI316 UNI EN10088	Bronze UNI EN1982 G–CuSn5Zn5Pb5	Stainless steel AISI316 UNI EN10088	Stainless steel AISI316 UNI EN10088
04	Disc (≥ DN100)	Cast steel GP240–GH UNI EN10213 plus AISI316 facing welding	Bronze UNI EN1982 G–CuSn5Zn5Pb5	Cast steel GP240–GH UNI EN10213 plus AISI316 facing welding	Cast steel GP240–GH UNI EN10213 plus AISI316 facing welding
05	Stem	Stainless steel AISI316 UNI EN10088	Stainless steel AISI316 UNI EN10088	Stainless steel AISI316 UNI EN10088	Stainless steel AISI316 UNI EN10088
06	Spring	Steel UNI EN10270	Steel UNI EN10270	Steel UNI EN10270	Steel UNI EN10270
07	Columns	Carbon steel GE240 UNI EN10293	Brass CW617N (OT58)	Carbon steel GE240 UNI EN10293	Carbon steel GE240 UNI EN10293
08	Handwheel	Sheet of carbon steel	Sheet of carbon steel	Sheet of carbon steel	Sheet of carbon steel
09	Gasket	Planiflex KG carbo/C PF81	Planiflex KG carbo/C PF81	Planiflex KG carbo/C PF81	Planiflex KG carbo/C PF81
10	Packing	Carbograph GR8800	Carbograph GR8800	Carbograph GR8800	Carbograph GR8800

Nota: Combinazioni materiali non standard a richiesta
Note: Non standard materials combinations on request

Valvole di sicurezza a molla inerna e scarico convogliato PN16-PN40

Safety valves inside spring NP16-NP40

Tab.130

Conform to: UNI EN1092

MOD.207–208–208L

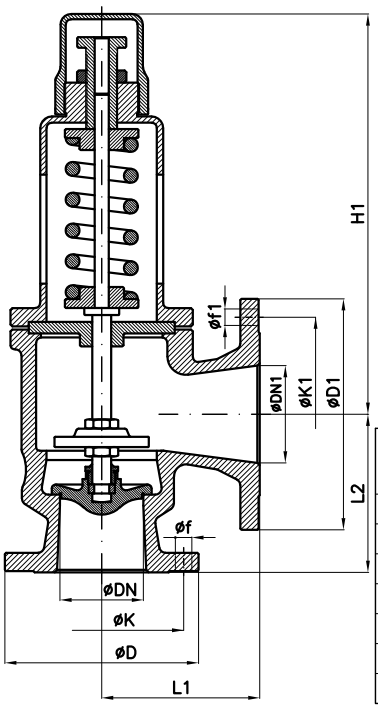

TIPO "H"

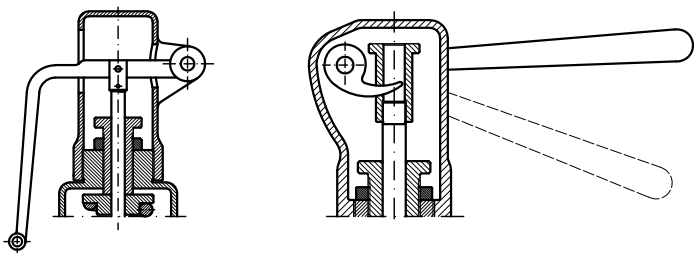

Le valvole vengono costruite con cappuccio aperto per vapore, cappuccio chiuso con leva aperta per acqua fredda e tipo "H" a tenuta ermetica per gas, acqua surriscaldata ecc. Si eseguono tenute morbide per particolari tipi di fluidi o gas.

The valves are designed with open cap for steam, closed cap with open lever for cold water and "H" type with hermetic tight for gas, super heathed water and soon. Upon request, soft tight for particular type of fluids or gas can be supplied.

DN/DN1	D (PN16)	K (PN16)	f (PN16)	Holes NO. f (PN16)	D (PN40)	K (PN40)	f (PN40)	Holes NO. f (PN40)	D1 (PN16)	K1 (PN16)	f1 (PN16)	Holes NO. f1 (PN16)	D1 (PN40)	K1 (PN40)	f1 (PN40)	Holes NO. f1 (PN40)	H1	L1	L2
20/40	105	75	14	4	105	75	14	4	150	110	18	4	150	110	18	4	295	100	90
25/40	115	85	14	4	115	85	14	4	150	110	18	4	150	110	18	4	320	103	106
32/50	140	100	18	4	140	100	18	4	165	125	18	4	165	125	18	4	325	112	116
40/65	150	110	18	4	150	110	18	4	185	145	18	4	185	145	18	8	410	112	125
50/80	165	125	18	4	165	125	18	4	200	160	18	8	200	160	18	8	425	121	132
65/100	185	145	18	4	185	145	18	8	220	180	18	8	235	190	22	8	510	139	155
80/125	200	160	18	8	200	160	18	8	250	210	18	8	270	220	26	8	530	165	180

MOD.150

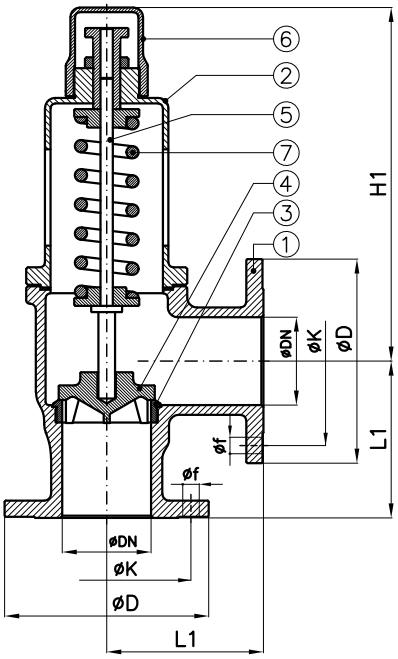

MOD.150													
DN	PN16–NP16					PN40–NP40							
	D	K	f	Holes NO. f	H1	D	K	f	Holes NO. f	H1	L	L1	L1 (M)
20	105	75	14	4	242	105	75	14	4	340	150	85	85
25	115	85	14	4	242	115	85	14	4	340	160	90	85
32	140	100	18	4	249	140	100	18	4	360	180	105	90
40	150	110	18	4	254	150	110	18	4	365	200	115	105
50	165	125	18	4	272	165	125	18	4	395	230	125	120
65	185	145	18	4	367	185	145	18	8	530	290	145	150
80	200	160	18	8	400	200	160	18	8	565	310	155	160
100	220	180	18	8	405	235	190	22	8	575	350	175	180
125	250	210	18	8	460	270	220	26	8	620	400	200	200
150	285	240	22	8	475	300	250	26	8	700	480	225	210

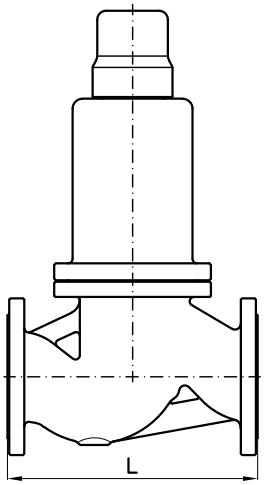

Mod. 207 – 208 – 208L – 150				
Combinazione materiali standard – Standard materials Combination				
		A/316	G/316	GS/316
ITEM	DENOMINAZIONE DENOMINATION	MATERIALE MATERIAL	MATERIALE MATERIAL	MATERIALE MATERIAL
01	Body	Cast steel GP240–GH UNI EN10213	Cast iron UNI EN1561 EN–GJL–250	Nodular cast iron EN–GJS–400–15U UNI EN1563
02	Bonnet	Steel Fe430B(S275JR) UNI EN10025	Steel Fe430B(S275JR) UNI EN10025	Steel Fe430B(S275JR) UNI EN10025
03	Body seat	Stainless steel AISI316 UNI EN10088	Stainless steel AISI316 UNI EN10088	Stainless steel AISI316 UNI EN10088
04	Disc (≤ DN80)	Stainless steel AISI316 UNI EN10088	Stainless steel AISI316 UNI EN10088	Stainless steel AISI316 UNI EN10088
04	Disc (≥ DN100)	Cast steel GP240–GH UNI EN10213 plus AISI316 facing welding	Cast steel GP240–GH UNI EN10213 plus AISI316 facing welding	Cast steel GP240–GH UNI EN10213 plus AISI316 facing welding
05	Stem	Stainless steel AISI316 UNI EN10088	Stainless steel AISI316 UNI EN10088	Stainless steel AISI316 UNI EN10088
06	Upper Bonnet	Steel Fe430B(S275JR) UNI EN10025	Steel Fe430B(S275JR) UNI EN10025	Steel Fe430B(S275JR) UNI EN10025
07	Spring	Steel UNI EN10270	Steel UNI EN10270	Steel UNI EN10270
Nota: Combinazioni materiali non standard a richiesta Note: Non standard materials combinations on request				

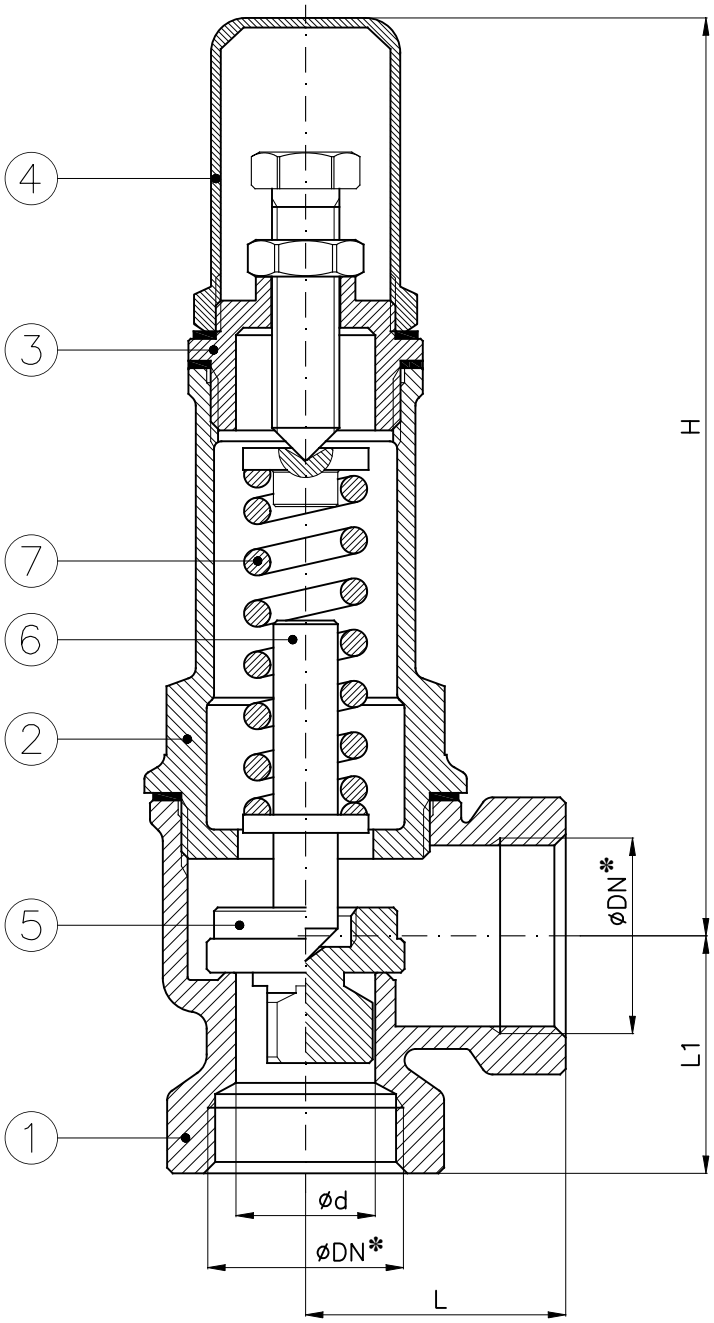

SEDE TEFLON
PTFE SEAT

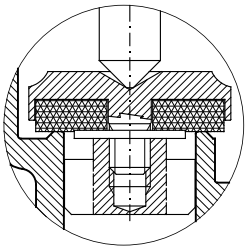

✻: Filettatura GAS
✻: *BSPP threaded*

DN	d	H	L	L1	Weight (Kg)
3/8"	13	125	30	29	0.4
1/2"	15	128	30	28	0.42
3/4"	19	160	36	32	0.67
1"	24.5	175	47	38	1.1
1"1/4	31.5	196	57	44	1.5
1"1/2	38	225	62	47	2.3
2"	48	245	72	54	3.4
2"1/2	64	285	80	72	5.7
3"	75	300	92	74	7
4"	96	380	110	84	13.7

Combinazione materiali standard – Standard materials Combination		
		B/O
ITEM	DENOMINAZIONE DENOMINATION	MATERIALE MATERIAL
01	Body	Bronze UNI EN1982 G-CuSn5Zn5Pb5
02	Bonnet	Brass CW617N (OT58)
03	Plug	Brass CW617N (OT58)
04	Cap	Brass CW617N (OT58)
05	Disc(DN3/8"÷2")	Brass CW617N (OT58)
05	Disc(DN2"1/2"÷4")	Bronze UNI EN1982 G-CuSn5Zn5Pb5
06	Stem	Brass CW617N (OT58)
07	Spring	Steel UNI EN10270
Nota: Note:	Combinazioni materiali non standard a richiesta Non standard materials combinations on request	

Valvola di sicurezza
Safety valve

Art.19AL

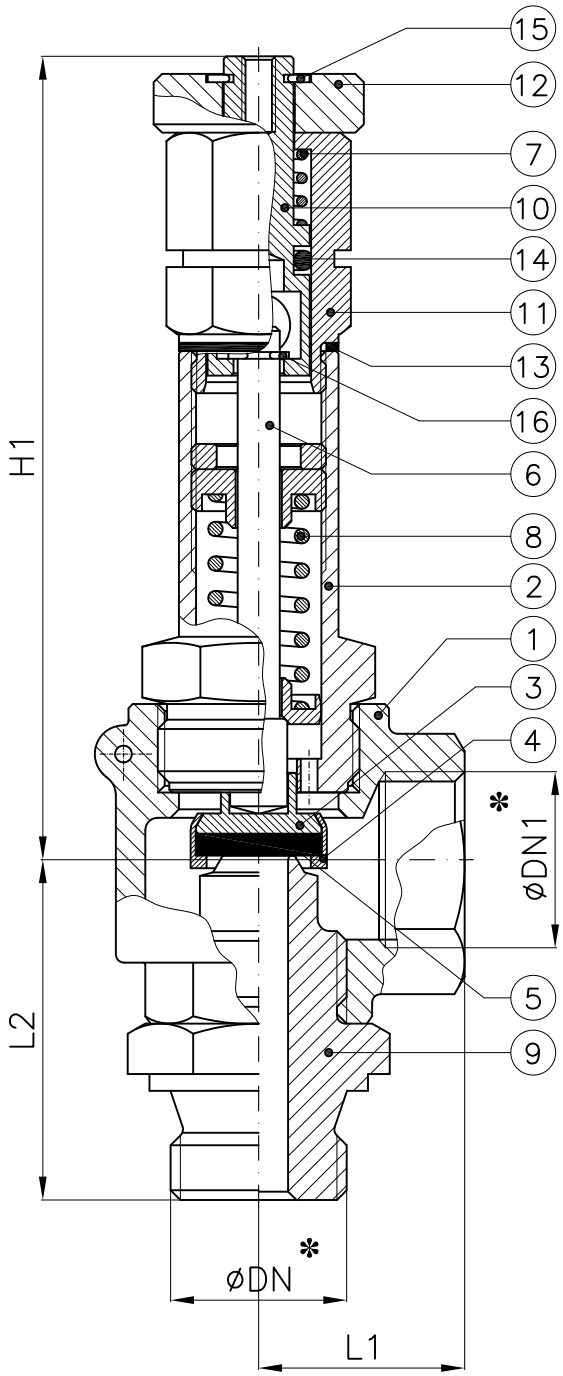

Taratura specifica a richiesta
Specific calibration on request

176–01	6 bar
176–02	15 bar
176–03	10 bar
176–04	7 bar
176–05	8 bar
176–06	12 bar

✻: Filettatura GAS
✻: *BSPP threaded*

DN x DN1	H1 (~)	H2 (~)	L1	L2	Weight (Kg)
1/2" x 1/2"	95	86	24.5	40.5	0.42

Close type

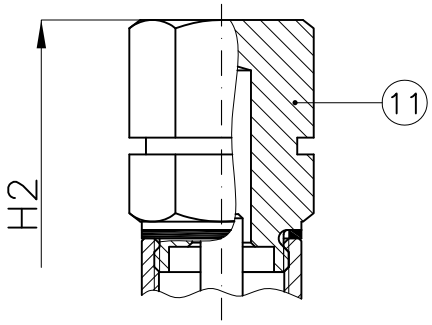

Taratura specifica a richiesta
Specific calibration on request

706–01	7.5 bar
706–02	16 bar
706–03	10 bar
706–04	13 bar

Combinazione materiali standard – Standard materials Combination		
		B/316
ITEM	DENOMINAZIONE DENOMINATION	MATERIALE MATERIAL
01	Body	Bronze UNI EN1982 G-CuSn5Zn5Pb5
02	Cover	Brass CW617N (OT58)
03	Disc	Stainless steel AISI316 UNI EN10088
04	Adjustment ring	Brass CW617N (OT58)
05	Gasket	VITON/PTFE
06	Stem	Stainless steel AISI304 UNI EN10088
07	Cap spring	Stainless steel AISI316 UNI EN10088
08	Spring discharge device	Stainless steel AISI316 UNI EN10088
09	Nozzle	Stainless steel AISI304 UNI EN10088
10	Pin	Brass CW617N (OT58)
11	Cap	Brass CW617N (OT58)
12	Disc washer	Brass CW617N (OT58)
13	Body-cap gasket	Copper
14	O-ring	NBR
15	Radial ring	Stainless steel AISI316 UNI EN10088
16	Radial ring	Stainless steel AISI316 UNI EN10088
Nota: Combinazioni materiali non standard a richiesta Note: Non standard materials combinations on request		

Conform to:
UNI EN1092

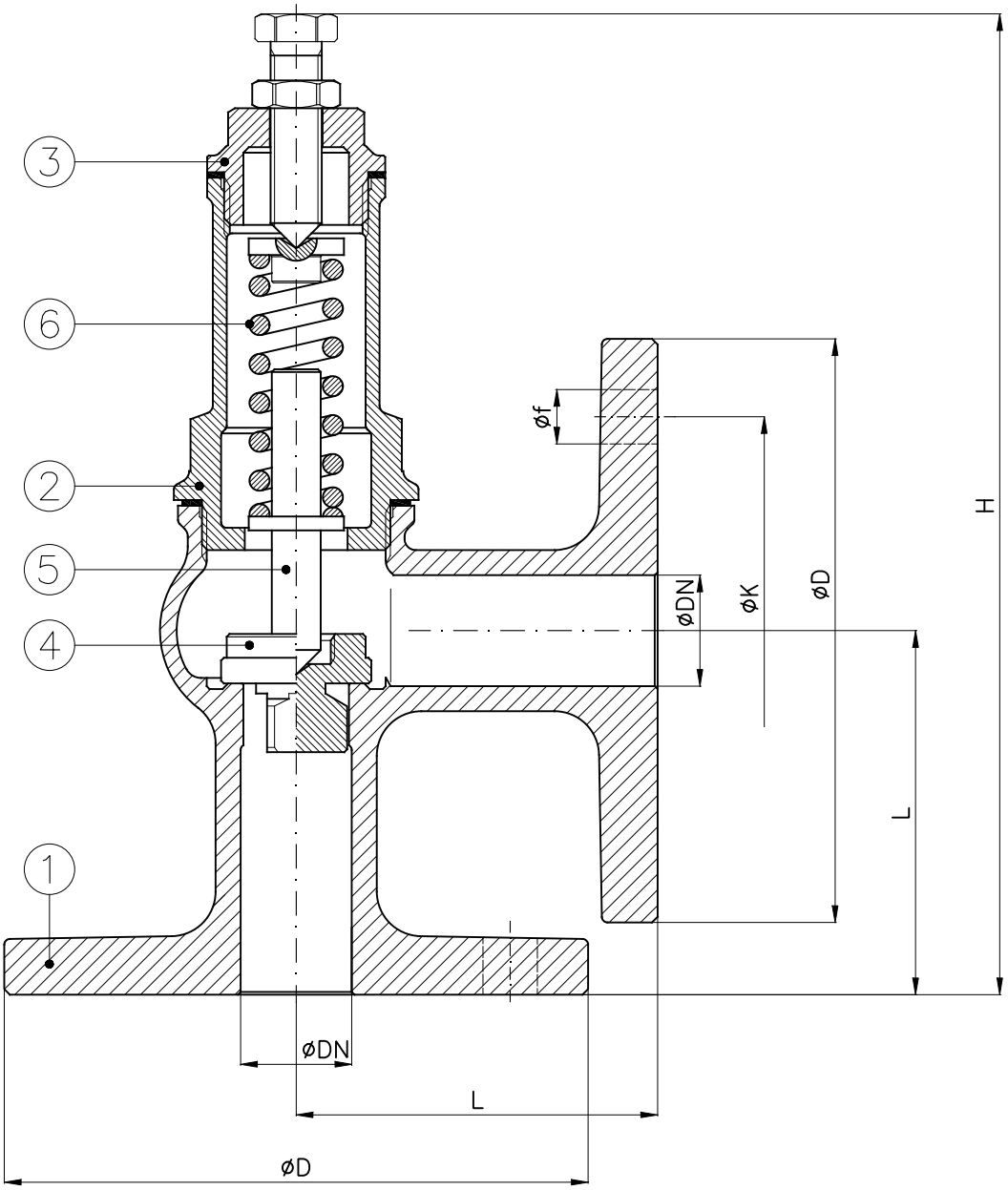

SEDE TEFLON
PTFE SEAT

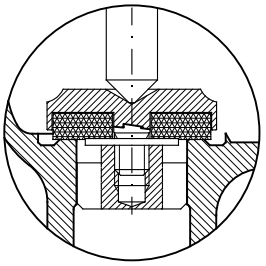

DN	H	L	D	K	f	Holes NO. f	Weight (Kg)
15	155	60	95	65	14	4	1.7
20	183	65	105	75	14	4	2.2
25	202	72	115	85	14	4	3.2
32	239	85	140	100	18	4	4.8
40	255	90	150	110	18	4	6.1
50	280	105	165	125	18	4	8.5
65	320	110	185	145	18	4	12.5
80	337	115	200	160	18	8	14.5
100	415	140	220	180	18	8	20

Combinazione materiali standard – Standard materials Combination		
		B/O
ITEM	DENOMINAZIONE DENOMINATION	MATERIALE MATERIAL
01	Body	Bronze UNI EN1982 G-CuSn5Zn5Pb5
02	Bonnet	Brass CW617N (OT58)
03	Plug	Brass CW617N (OT58)
04	Disc (DN15÷50)	Brass CW617N (OT58)
04	Disc (DN65÷100)	Bronze UNI EN1982 G-CuSn5Zn5Pb5
05	Stem	Brass CW617N (OT58)
06	Spring	Steel UNI EN10270
Nota:	Combinazioni materiali non standard a richiesta	
Note:	Non standard materials combinations on request	

Conform to:
UNI EN1092

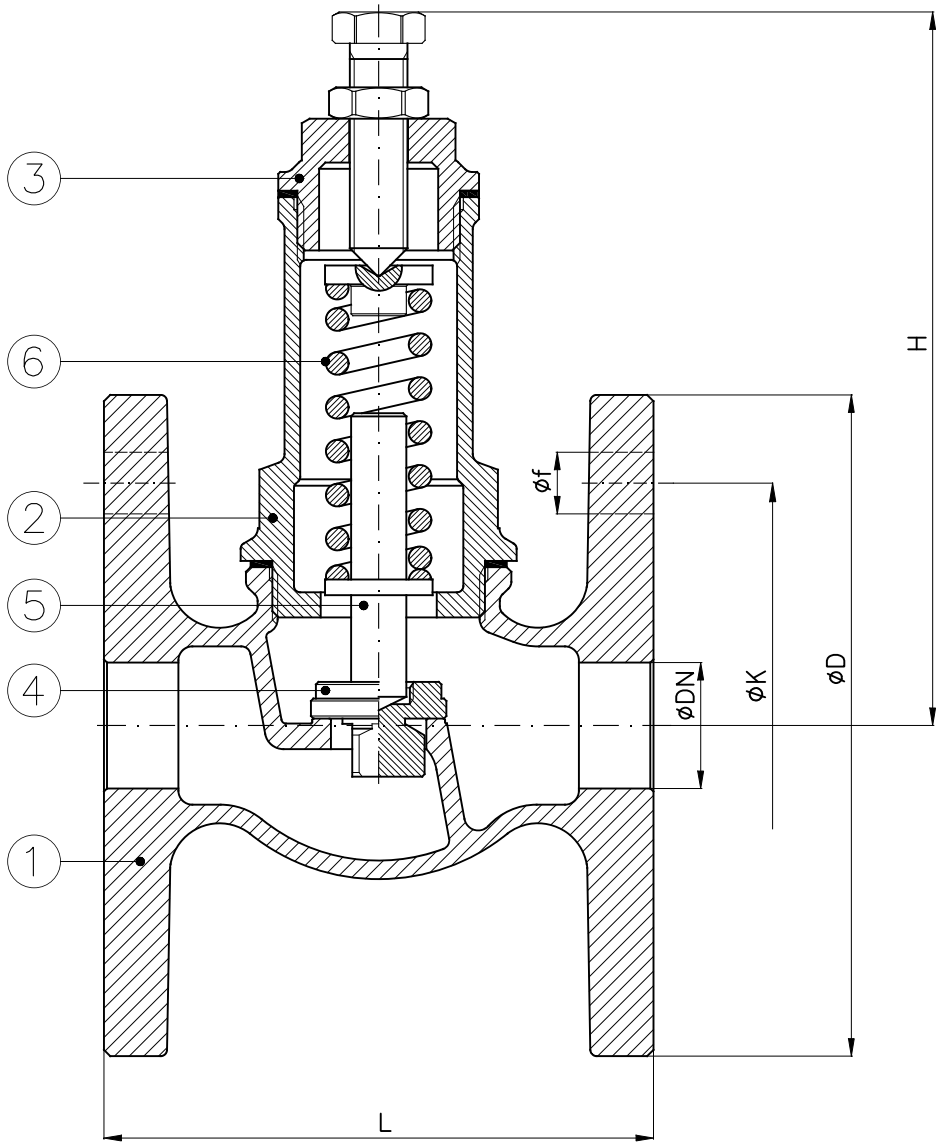

SEDE TEFLON
PTFE SEAT

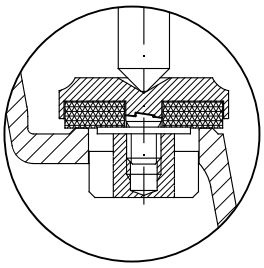

DN	H	L	D	K	f	Holes NO. f	Weight (Kg)
15	93	70	95	65	14	4	1.3
20	120	90	105	75	14	4	2
25	137	99	115	85	14	4	2.6
32	163	108	140	100	18	4	5
40	172	130	150	110	18	4	5.9
50	192	147	165	125	18	4	7
65	228	190	185	145	18	4	11
80	235	207	200	160	18	8	14
100	297	220	220	180	18	8	21

Combinazione materiali standard – Standard materials Combination		
		B/O
ITEM	DENOMINAZIONE DENOMINATION	MATERIALE MATERIAL
01	Body	Bronze UNI EN1982 G-CuSn5Zn5Pb5
02	Bonnet	Brass CW617N (OT58)
03	Plug	Brass CW617N (OT58)
04	Disc (DN15÷50)	Brass CW617N (OT58)
04	Disc (DN65÷100)	Bronze UNI EN1982 G-CuSn5Zn5Pb5
05	Stem	Brass CW617N (OT58)
06	Spring	Steel UNI EN10270
Nota: Note:	Combinazioni materiali non standard a richiesta Non standard materials combinations on request	

Valvola di regolazione pressione DN65 PN20 flangiata ANSI150

Pressure regulating valve (landing valve) ND65 NP20-ANSI150

Tab.1340

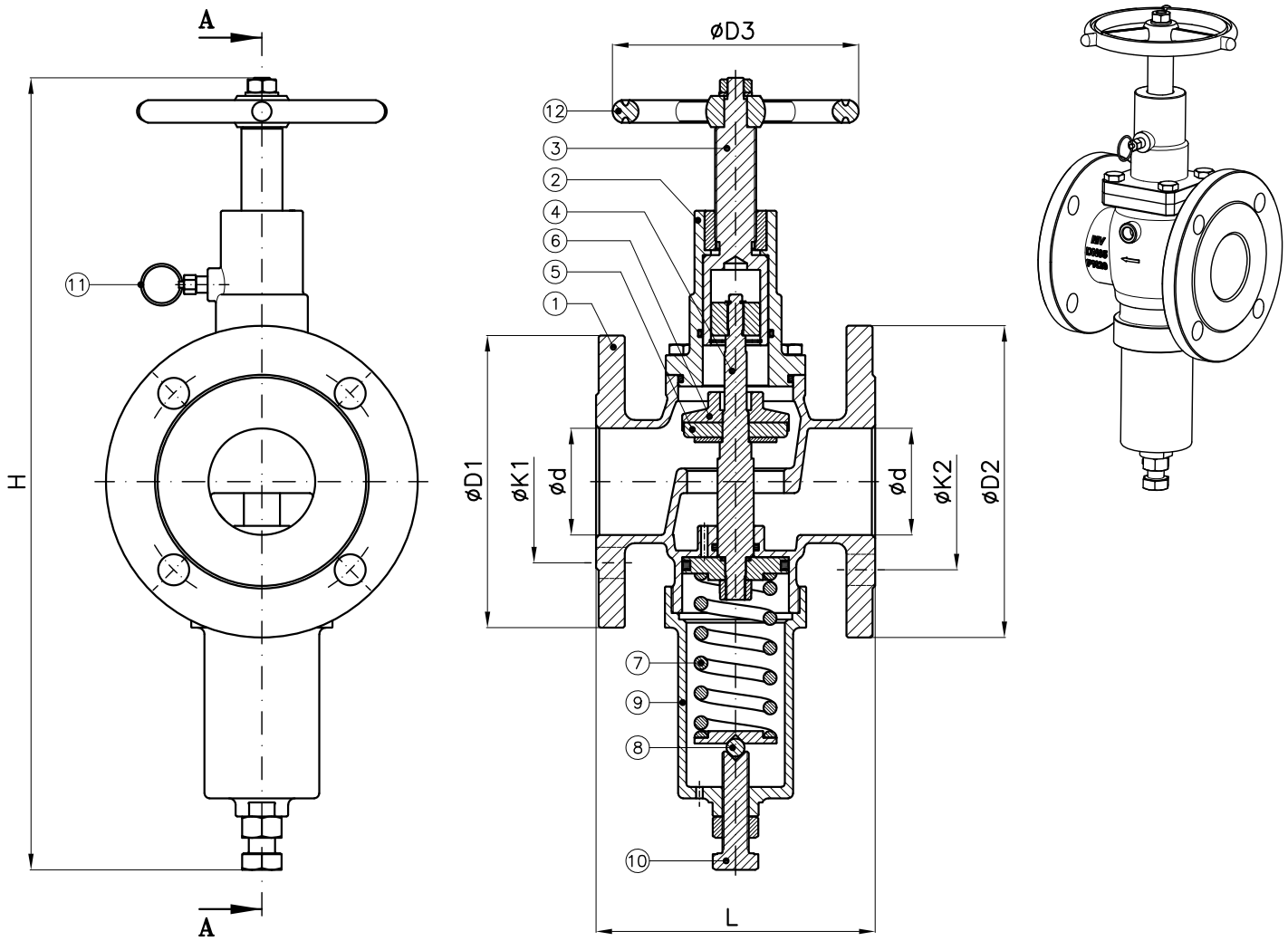

							ANSI150							
DN		D3	d	H (~)	L	Weight (Kg)	D1	K1	f1	Holes NO. f1	D2	K2	f2	Holes NO. f2
65	2"1/2	150	65	490	170	15	178	140	19	4	190	152	19	4

Combinazione materiali standard Standard materials Combination			
		F53/F53	B/B
ITEM	DENOMINAZIONE DENOMINATION	MATERIALE MATERIAL	MATERIALE MATERIAL
01	Body	Super duplex F53–A995 Gr.5A	Bronze ASTM B62
02	Bonnet	Super duplex F53–A995 Gr.5A	Bronze ASTM B62
03	Upper stem	Super duplex UNS S32750 F53	Bronze ASTM B62
04	Stem	Super duplex UNS S32750 F53	Bronze ASTM B62
05	Disc gasket	NBR	NBR
06	Disc	Super duplex UNS S32750 F53	Bronze ASTM B62

Nota: Combinazioni materiali non standard a richiesta
Note: Non standard materials combinations on request

Combinazione materiali standard Standard materials Combination			
		F53/F53	B/B
ITEM	DENOMINAZIONE DENOMINATION	MATERIALE MATERIAL	MATERIALE MATERIAL
07	Spring	Stainless steel AISI302 UNI EN10270	Stainless steel AISI302 UNI EN10270
08	Ball	Stainless steel AISI304 UNI EN10088	Stainless steel AISI304 UNI EN10088
09	Bottom cover	Bronze ASTM B62	Bronze ASTM B62
10	Adjusting screw	Stainless steel A4	Stainless steel A4
11	Locking pin	Stainless steel AISI316 UNI EN10088	Stainless steel AISI316 UNI EN10088
12	Handwheel	Bronze ASTM B62	Bronze ASTM B62

Nota: Combinazioni materiali non standard a richiesta
Note: Non standard materials combinations on request

Rubinetti a maschio a via diritta PN6 e PN16
Straight way cocks NP6 and NP16

Tab.167

Conform to:
UNI EN1092

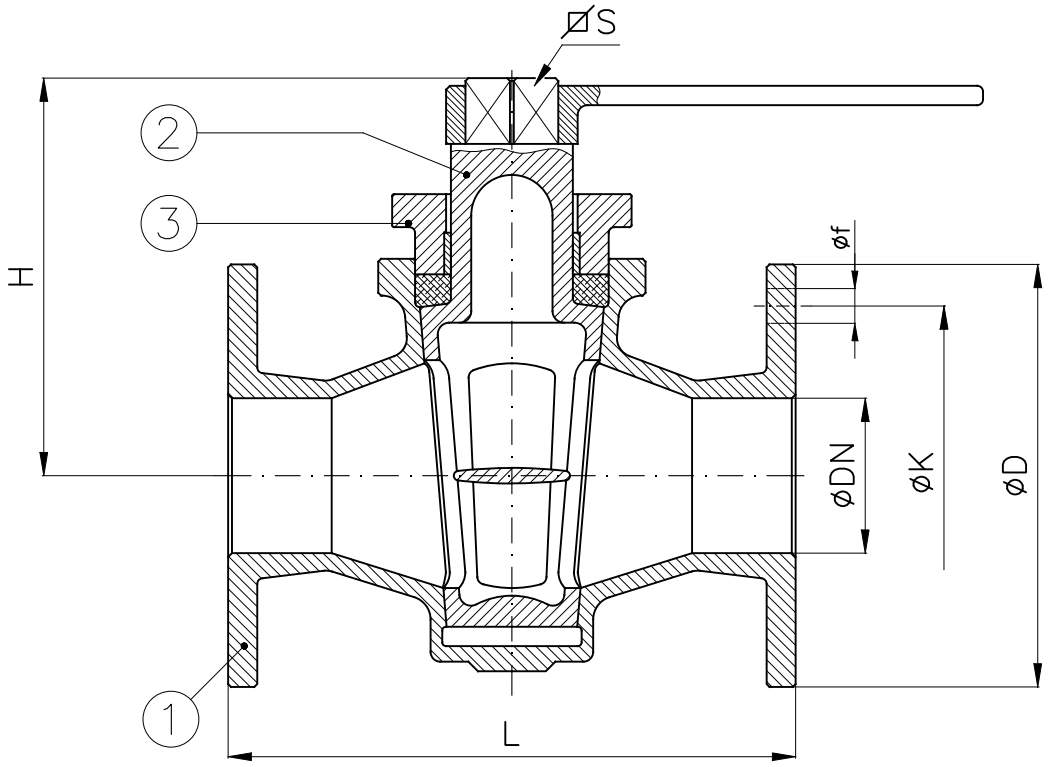

	Ghisa – cast iron			PN6 – NP6					PN16 – NP16				
DN	L	H	S	D	K	f	Holes NO. f	Weight (Kg.)	D	K	f	Holes NO. f	Weight (Kg.)
20	95	98	16	90	65	11	4	2.1	105	75	14	4	2.7
25	115	105	18	100	75	11	4	2.7	115	85	14	4	3.5
32	120	120	22	120	90	14	4	3.9	140	100	18	4	5
40	140	130	24	130	100	14	4	5.8	150	110	18	4	7
50	160	145	27	140	110	14	4	7.8	165	125	18	4	10
65	230	180	32	160	130	14	4	12.5	185	145	18	4	15
80	260	190	36	190	150	18	4	17	200	160	18	8	19
100	320	230	50	210	170	18	4	27	220	180	18	8	30
125	355	300	61	240	200	18	8	53	250	210	18	8	57

	Bronzo – Bronze			PN6 – NP6					PN16 – NP16				
DN	L	H	S	D	K	f	Holes NO. f	Weight (Kg)	D	K	f	Holes NO. f	Weight (Kg)
15	100	87	16	80	55	11	4	5.5	95	65	14	4	6
20	100	87	16	90	65	11	4	5.9	105	75	14	4	6.5
25	100	87	16	100	75	11	4	6.2	115	85	14	4	7
32	110	110	19	120	90	14	4	7.4	140	100	18	4	8.5
40	140	120	19	130	100	14	4	10.8	150	110	18	4	12
50	150	137	26	140	110	14	4	11.2	165	125	18	4	13
65	190	170	32	160	130	14	4	12.7	185	145	18	4	15
80	220	195	36	190	150	18	4		200	160	18	8	
100	250	210	38	210	170	18	4		220	180	18	8	

Combinazione materiali standard – Standard materials Combination			
		G/O	B/O
ITEM	DENOMINAZIONE DENOMINATION	MATERIALE MATERIAL	MATERIALE MATERIAL
01	Body	Cast iron UNI EN1561 EN-GJL-250	Bronze UNI EN1982 G-CuSn5Zn5Pb5
02	Plug	Brass CW617N (OT58)	Brass CW617N (OT58)
03	Gland	Cast iron UNI EN1561 EN-GJL-250	Bronze UNI EN1982 G-CuSn5Zn5Pb5
Nota: Combinazioni materiali non standard a richiesta Note: Non standard materials combinations on request			

Rubinetti a maschio a 3 vie PN6 e PN16
Three way cocks NP6 and NP16

Tab.168

Conform to:
UNI EN1092

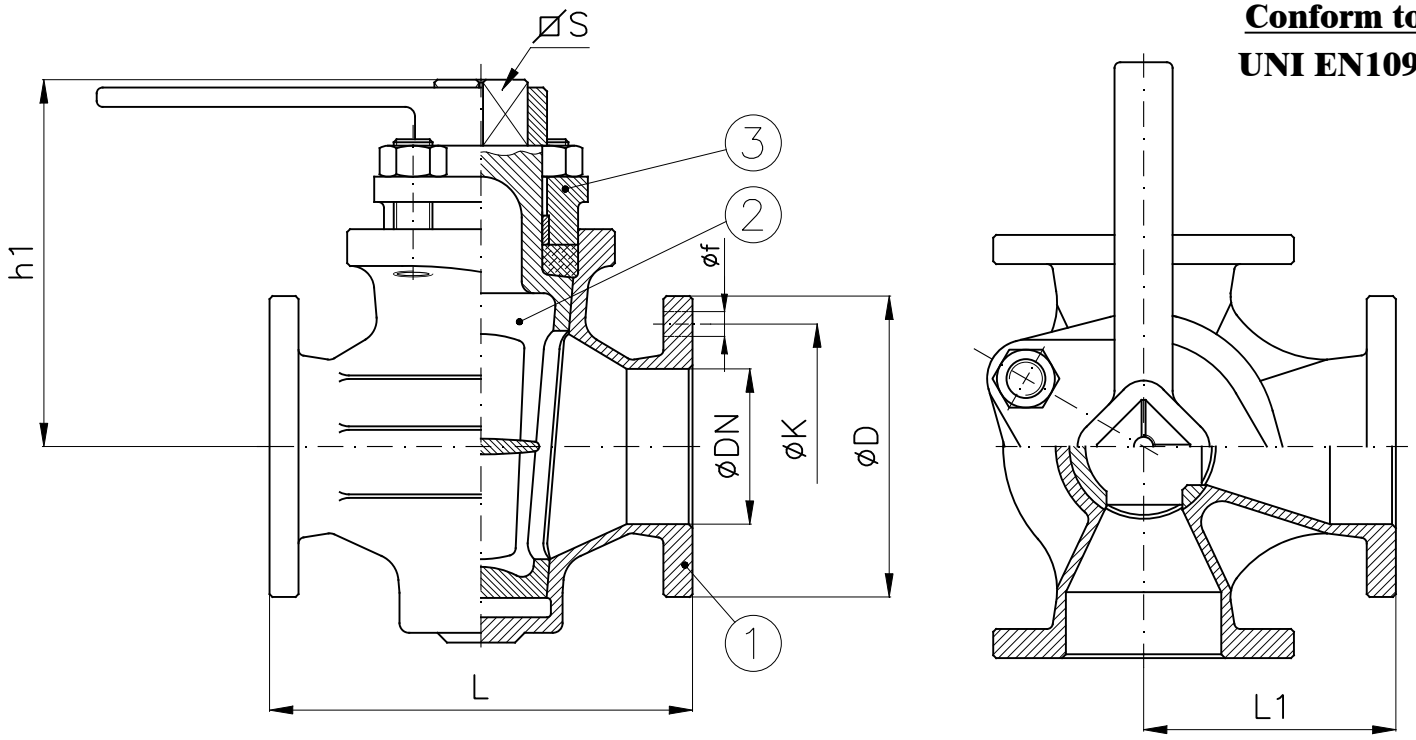

	Ghisa – cast iron				PN6 – NP6					PN16 – NP16				
DN	L	L1	h1	S	D	K	f	Holes NO. f	Weight (Kg.)	D	K	f	Holes NO. f	Weight (Kg.)
25	150	75	120	22	100	75	11	4	4.8	115	85	14	4	6
32	180	90	125	24	120	90	14	4	7.3	140	100	18	4	9
40	190	95	145	27	130	100	14	4	9.7	150	110	18	4	11.5
50	205	102.5	145	27	140	110	14	4	11.7	165	125	18	4	15
65	240	120	180	32	160	130	14	4	17	185	145	18	4	21
80	260	130	190	36	190	150	18	4	23	200	160	18	8	26
100	320	160	230	50	210	170	18	4	34.5	220	180	18	8	39
125	355	177.5	300	61	240	200	18	8	61	250	210	18	8	67

	Bronzo – Bronze				PN6 – NP6					PN16 – NP16				
DN	L	L1	h1	S	D	K	f	Holes NO. f	Weight (Kg.)	D	K	f	Holes NO. f	Weight (Kg.)
15	100	70	65	16	80	55	11	4	5.7	95	65	14	4	7
20	100	70	65	16	90	65	11	4	6	105	75	14	4	7
25	100/130	70/65	65	16	100	75	11	4	6.8	115	85	14	4	8
32	130/160	80/95	110	19	120	90	14	4	8.3	140	100	18	4	10
40	165	100	118	19	130	100	14	4	10	150	110	18	4	12
50	175	105	137	26	140	110	14	4	12	165	125	18	4	15
65	190/220	120/110	170	32	160	130	14	4	14	185	145	18	4	18
80	220	130	195	36	190	150	18	4		200	160	18	8	
100	250	150	210	38	210	170	18	4		220	180	18	8	

Combinazione materiali standard – Standard materials Combination			
		G/O	B/O
ITEM	DENOMINAZIONE DENOMINATION	MATERIALE MATERIAL	MATERIALE MATERIAL
01	Body	Cast iron UNI EN1561 EN-GJL-250	Bronze UNI EN1982 G-CuSn5Zn5Pb5
02	Plug	Brass CW617N (OT58)	Brass CW617N (OT58)
03	Gland	Cast iron UNI EN1561 EN-GJL-250	Bronze UNI EN1982 G-CuSn5Zn5Pb5
Nota: Combinazioni materiali non standard a richiesta Note: Non standard materials combinations on request			

Rubinetti per sonda UNAV4373.1 (Bronzo - contrappeso in ghisa)
Self-closing sounding cocks (Bronze - counter weight cast iron)

Tab.178

Conform to:
NE408723
NM584410

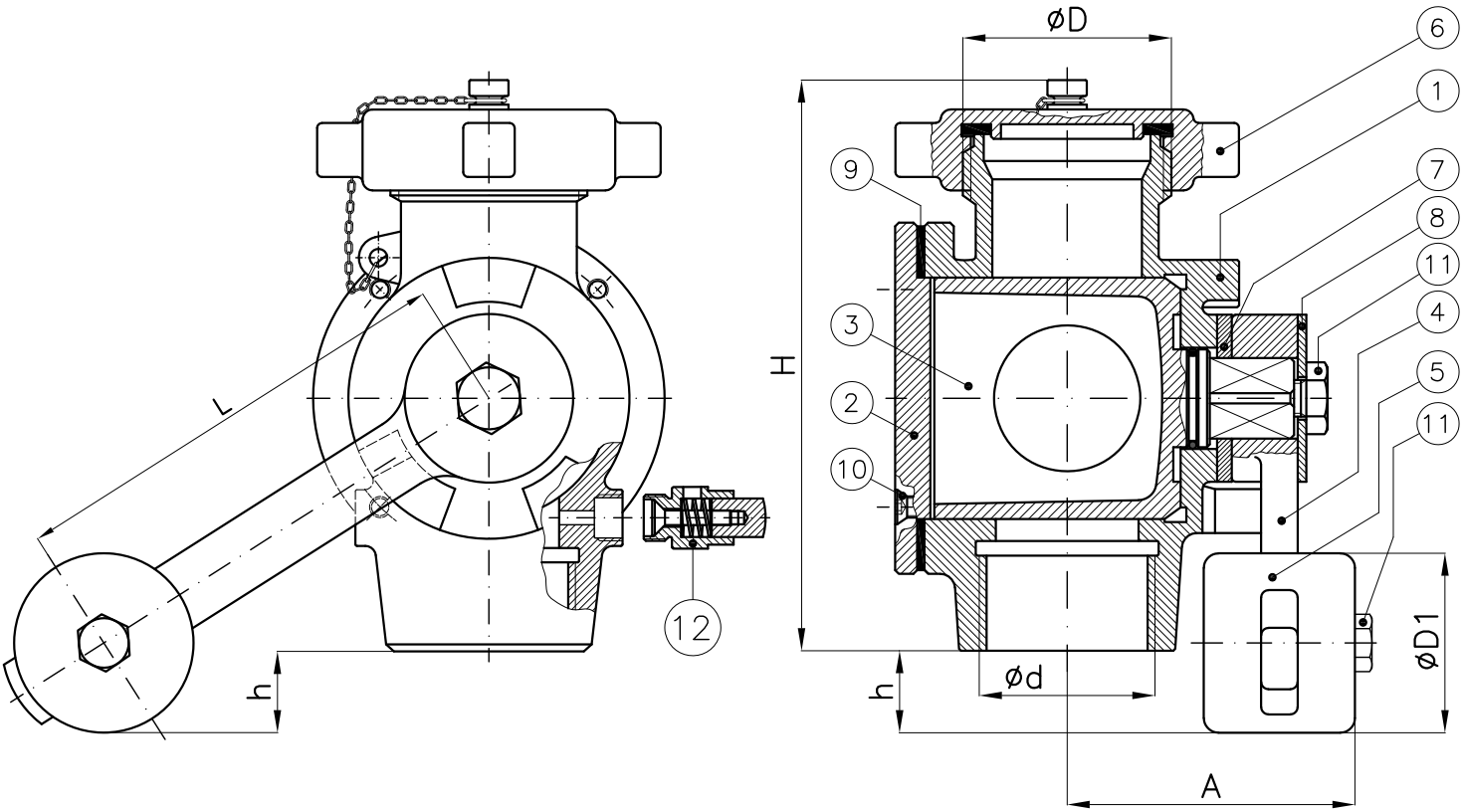

valvolina di sfiato a pulsante (a richiesta)
push button air-vent valve (on request)

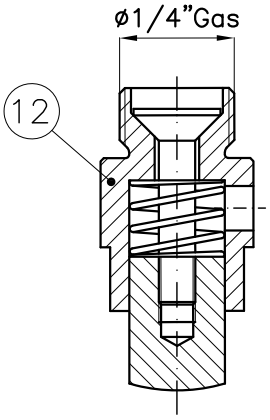

DN-d	D	D1	L	A	H	h	Weight (Kg)
1"1/2Gas	M56x4	70	135	85	170	30	5.5
2"Gas	M70x4	85	155	95	205	40	9.5

Combinazione materiali standard - Standard materials Combination		
		B/B
ITEM	DENOMINAZIONE DENOMINATION	MATERIALE MATERIAL
01	Body	Bronze UNI EN1982 G-CuSn5Zn5Pb5
02	Bonnet	Bronze UNI EN1982 G-CuSn5Zn5Pb5
03	Tap	Bronze UNI EN1982 G-CuSn5Zn5Pb5
04	Lever	Brass CW617N (OT58)
05	Counter weight	Cast iron UNI EN1561 EN-GJL-250
06	Plug	Brass CW509L (OT60)
07	Disc lever	Brass CW617N (OT58)
08	Washer	Galvanized steel
09	Gasket	NBR
10	Countersunk head screw	Stainless steel
11	Bolt	Galvanized steel
12	Push button air-vent valve	Brass CW617N (OT58)

Nota: Combinazioni materiali non standard a richiesta
Note: Non standard materials combinations on request

Rubinetti con premistoppa a due vie serie PN10
Two ways plug cocks with gland, class NP10

Art.31

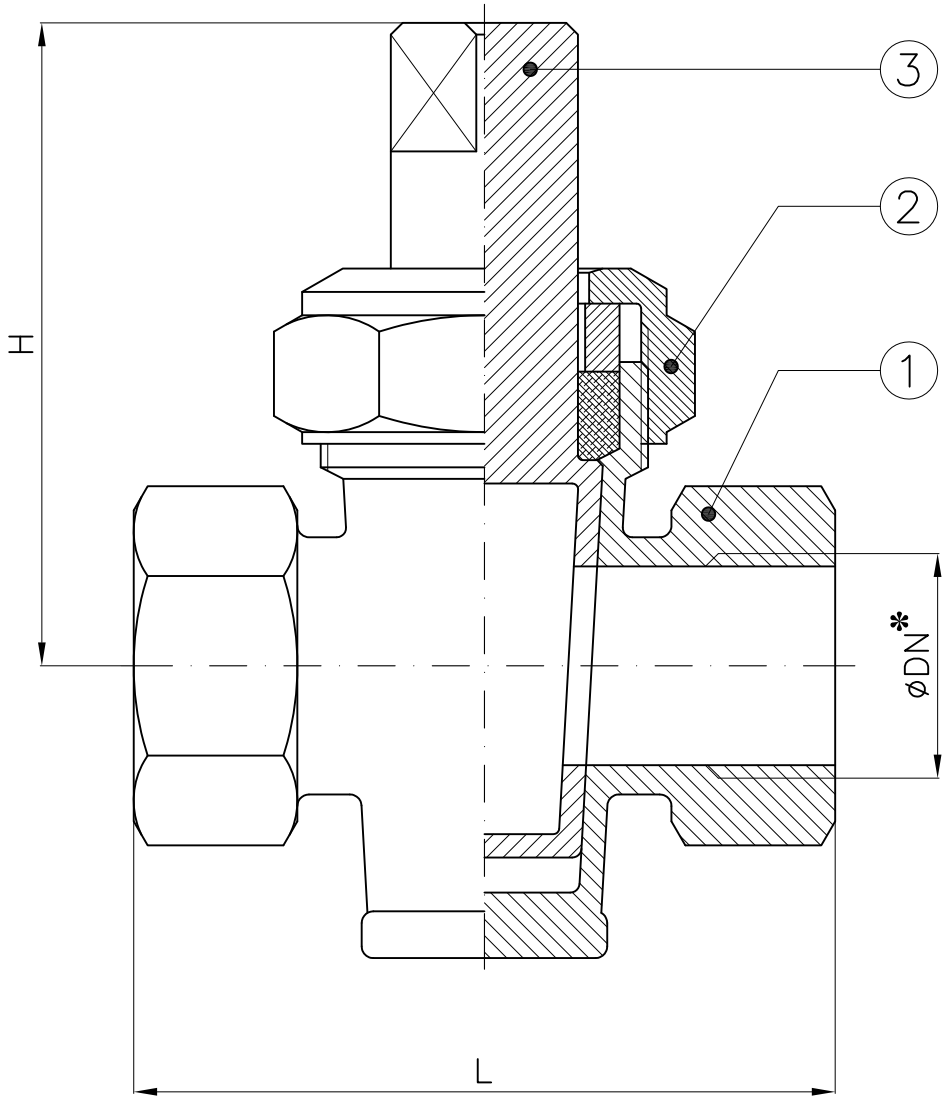

*: Filettatura GAS
*: *BSPP threaded*

DN	H	L	Weight (Kg)
1/4"	51	50	0.23
3/8"	54	54	0.3
1/2"	65	64	0.45
3/4"	71	73	0.65
1"	85	85	0.93
1"1/4	90	97	1.3
1"1/2	113	110	2.1
2"	126	128	3
2"1/2	130	135	4.8
3"	140	155	6.5

Combinazione materiali standard – Standard materials Combination		
		B/O
ITEM	DENOMINAZIONE DENOMINATION	MATERIALE MATERIAL
01	Body	Bronze UNI EN1982 G-CuSn5Zn5Pb5
02	Screw cap	Brass CW617N (OT58)
03	Plug	Brass CW617N (OT58)
Nota: Combinazioni materiali non standard a richiesta Note: Non standard materials combinations on request		

Rubinetti con premistoppa a tre vie serie PN10
Three ways plug cocks with gland, class NP10

Art.32

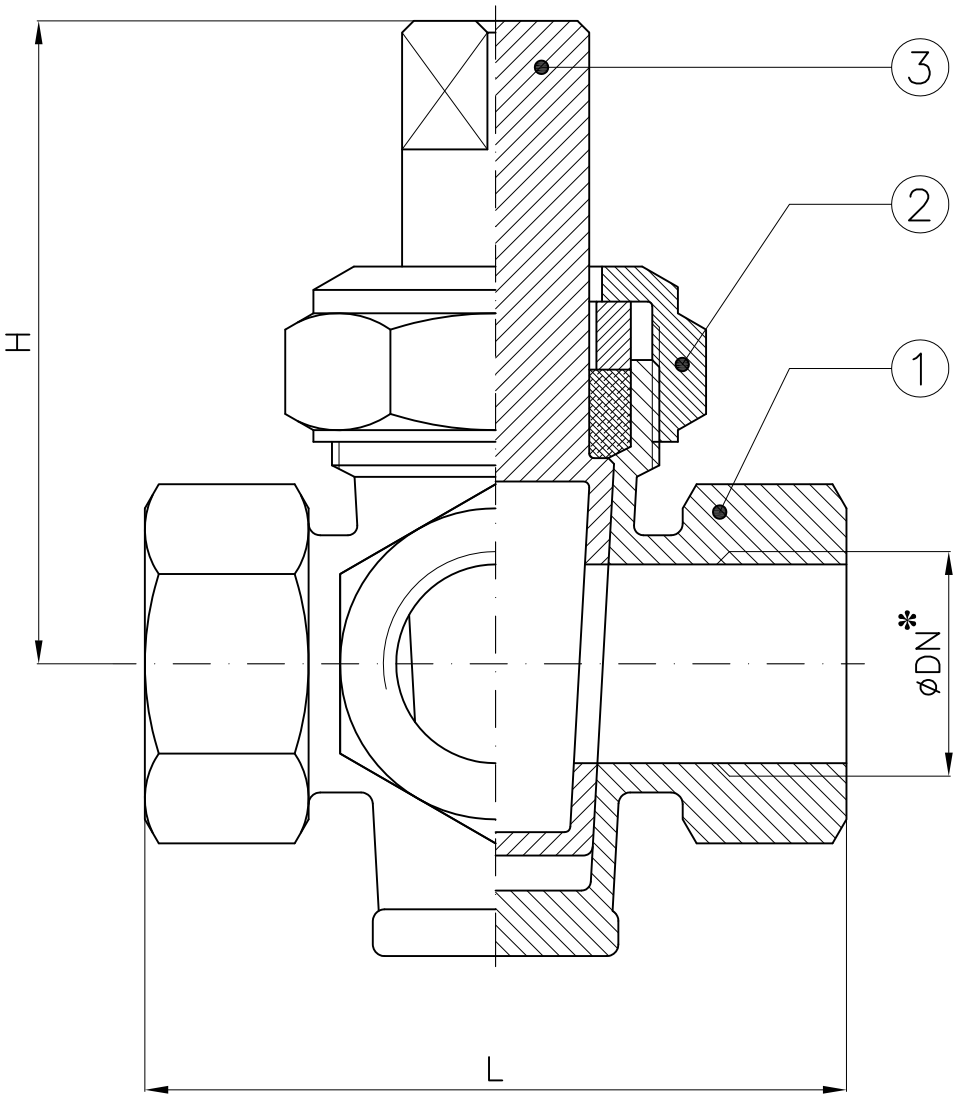

*: Filettatura GAS
*: *BSPP threaded*

DN	H	L	Weight (Kg)
1/4"	51	50	0.28
3/8"	54	54	0.35
1/2"	65	64	0.5
3/4"	71	73	0.7
1"	85	85	1.2
1"1/4	90	97	1.6
1"1/2	113	110	2.5
2"	126	128	3.3
2"1/2	130	135	4.6
3"	140	155	7.2

Combinazione materiali standard – Standard materials Combination		
		B/O
ITEM	DENOMINAZIONE DENOMINATION	MATERIALE MATERIAL
01	Body	Bronze UNI EN1982 G-CuSn5Zn5Pb5
02	Screw cap	Brass CW617N (OT58)
03	Plug	Brass CW617N (OT58)
Nota: Combinazioni materiali non standard a richiesta Note: Non standard materials combinations on request		

Rubinetto scarico diritto M/F in acciaio inox AISI316
Drain cock straight type M/F stainless steel AISI316

Art.425

Conform to:
NM466802

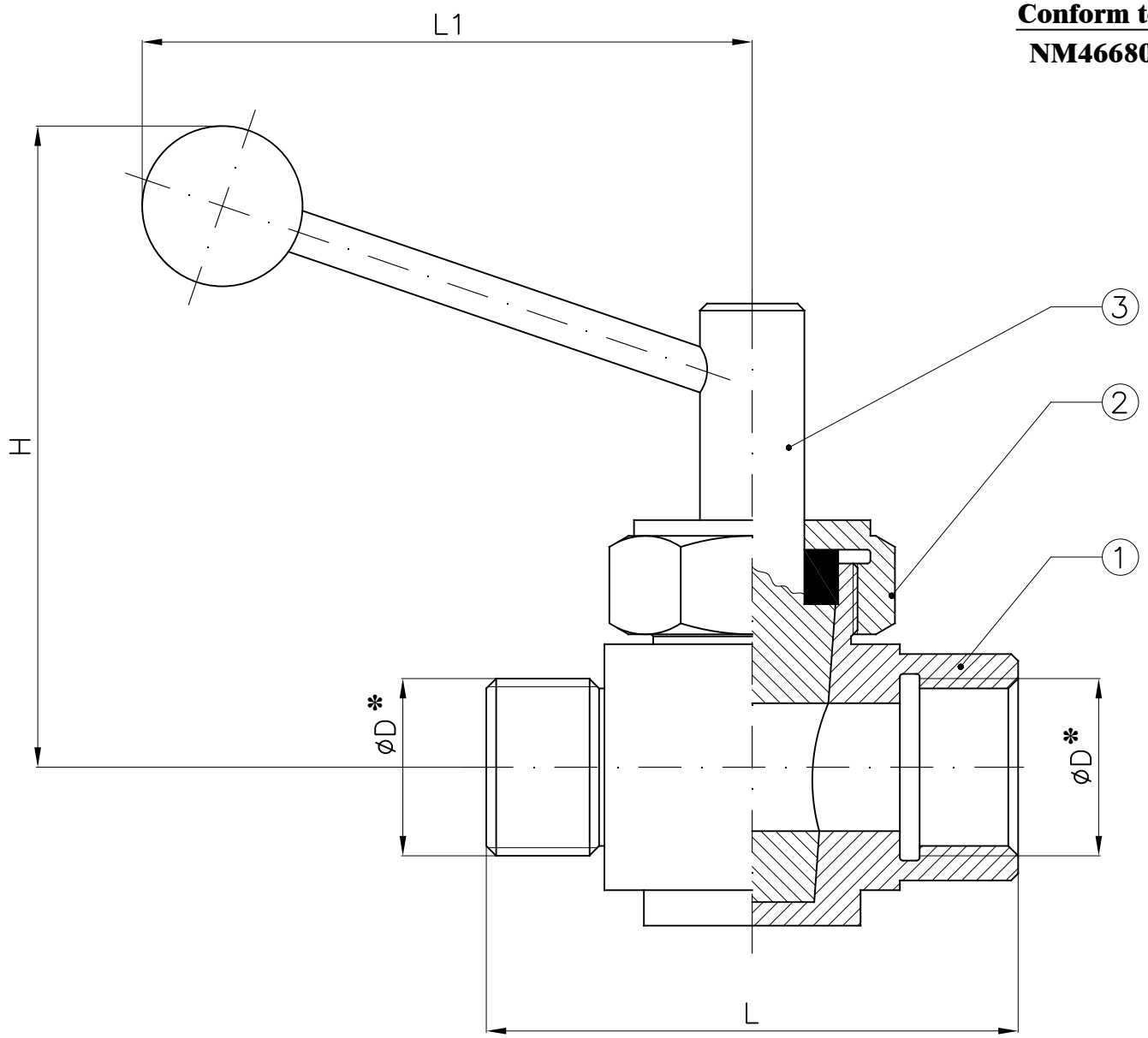

*: Filettatura GAS
*: *BSPP threaded*

DN	D	H	L	L1	Weight (Kg)
3/8"	3/8"	55	60	70	0.45
1/2"	1/2"	60	65	80	0.6
3/4"	3/4"	65	74	90	0.8
1"	1"	70	84	100	1
1"1/4	1"1/4	75	94	110	
1"1/2	1"1/2	80	108	120	
2"	2"	85	115	130	

Combinazione materiali standard – Standard materials Combination		
		316/316
ITEM	DENOMINAZIONE DENOMINATION	MATERIALE MATERIAL
01	Body	Stainless steel AISI316 UNI EN10088
02	Bonnet	Stainless steel AISI316 UNI EN10088
03	Plug	Stainless steel AISI316 UNI EN10088
Nota: Combinazioni materiali non standard a richiesta Note: Non standard materials combinations on request		

Rubinetti a galleggiante filettati in acciaio inox AISI316, sede metallica o teflon

Floating threaded cock stainless steel AISI316, metal or PTFE seat

Art.720

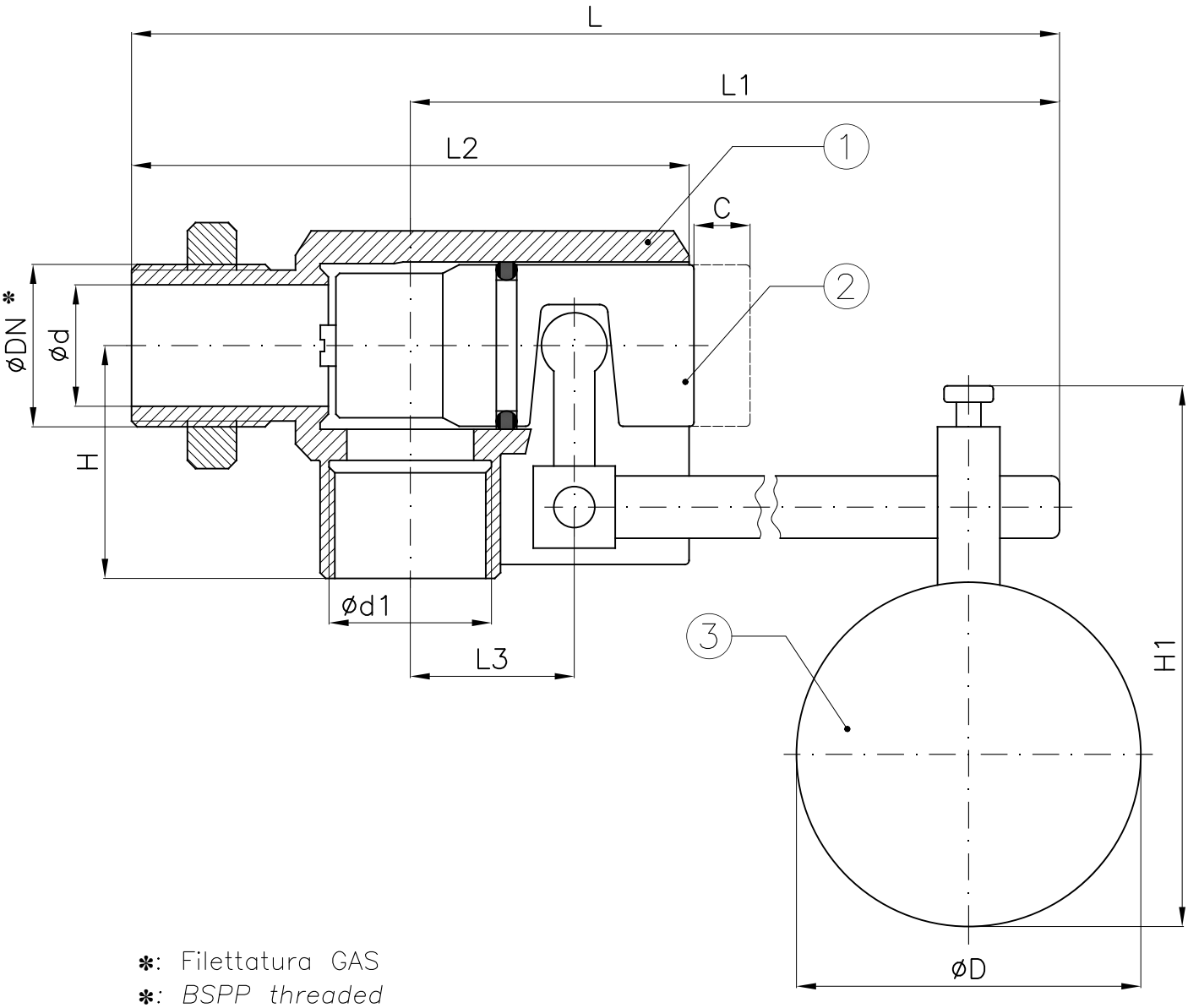

*: Filettatura GAS

*: *BSPP threaded*

DN	C (Corsa pistone) (Piston stroke)	D	d	d1	H	H1	L	L1	L2	L3
3/8"	4	100	11	3/8"	33	140	445	405	80	27
1/2"	6	120	14	1/2"	40	160	506	430	98	32
3/4"	10	150	17	3/4"	50	190	525	440	107	38
1"	10	220	23	1"	55	260	597	520	127	42
1"1/4	12	260	30	1"1/4	67	320	597	520	155	54
1"1/2	13	260	36	1"1/2	70	320	630	540	170	60
2"	15	300	47	2"	80	360	670	575	205	80

Combinazione materiali standard – Standard materials Combination		
		316/316
ITEM	DENOMINAZIONE DENOMINATION	MATERIALE MATERIAL
01	Body	Stainless steel AISI316 UNI EN10088
02	Shutter	Stainless steel AISI316 UNI EN10088
03	Float	Stainless steel AISI304 UNI EN10088

Nota: Combinazioni materiali non standard a richiesta

Note: Non standard materials combinations on request

Rubinetto flangiato "metal seated" per indicatori di livello in acciaio inox AISI316

"Metal seated" flanged cock for level gauges in stainless steel AISI316

Art.425-FL

Tipologia attacchi flangiati

PN6 entrata / uscita
PN16 entrata / uscita
PN6 entrata / PN16 uscita
PN16 entrata / PN6 uscita

Flanged connection type

NP6 inlet / outlet
NP16 inlet / outlet
NP6 inlet / NP16 outlet
NP16 inlet / NP6 outlet

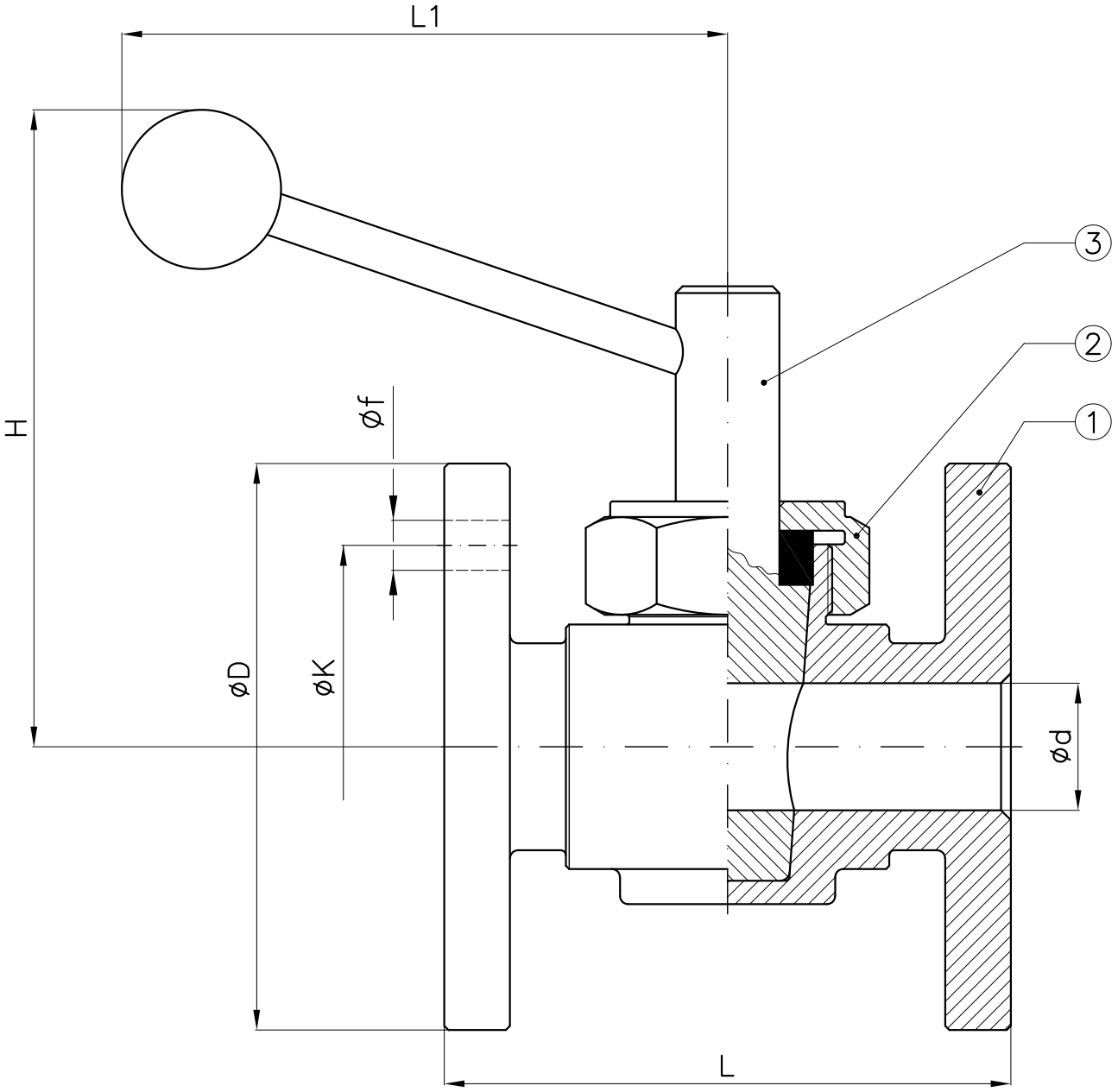

						PN6				PN16			
DN	d	H (~)	L	L1	Max Weight (Kg)	D	K	f	Holes No. f	D	K	f	Holes No. f
25	15	105	95	100	3.5	100	75	11	4	115	85	14	4
40	20	110	120	120	8	130	100	14	4	150	110	18	4

Combinazione materiali standard – Standard materials Combination		
		316/316
ITEM	DENOMINAZIONE DENOMINATION	MATERIALE MATERIAL
01	Body	Stainless steel AISI316 UNI EN10088
02	Bonnet	Stainless steel AISI316 UNI EN10088
03	Plug	Stainless steel AISI316 UNI EN10088

Nota: Combinazioni materiali non standard a richiesta
Note: Non standard materials combinations on request

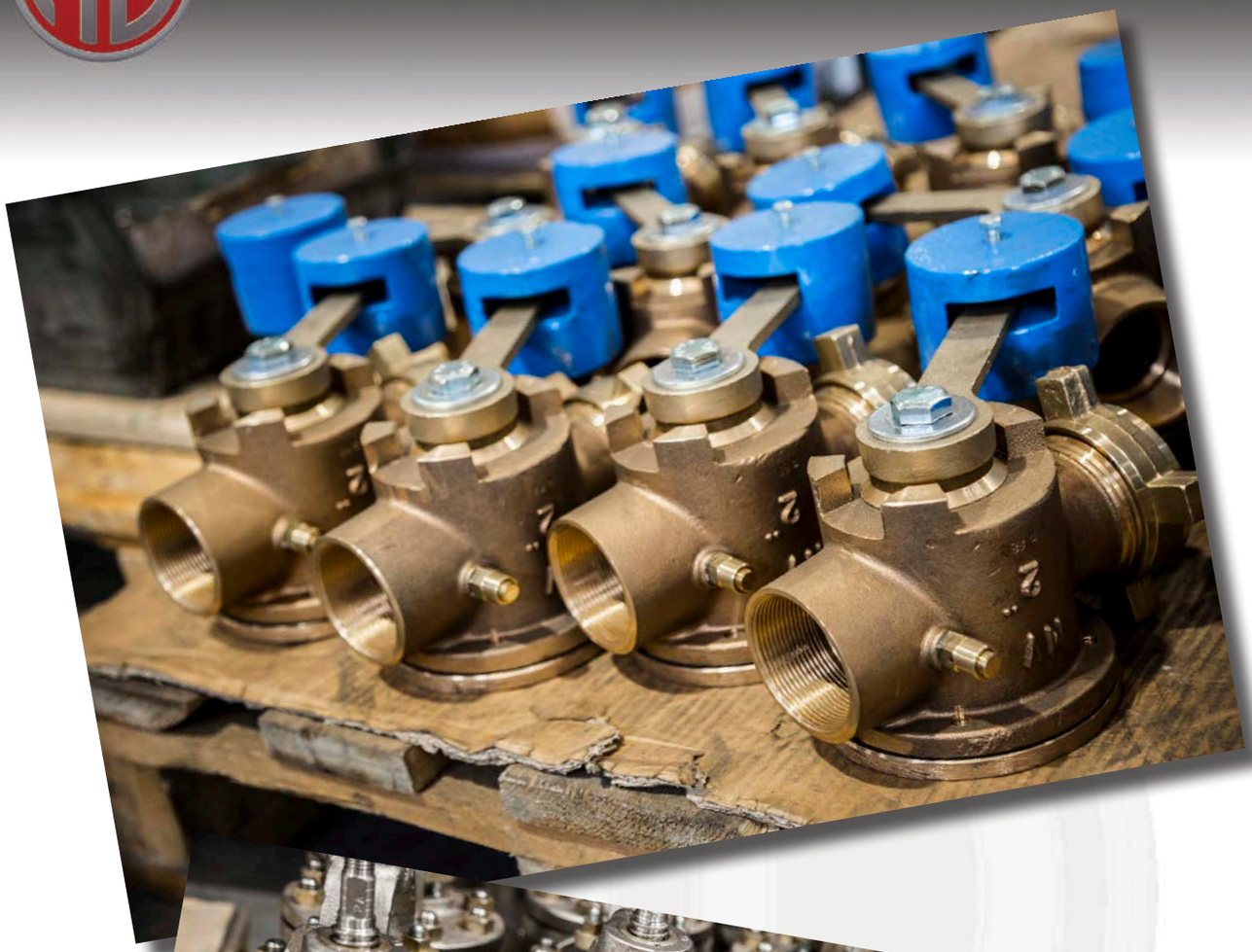

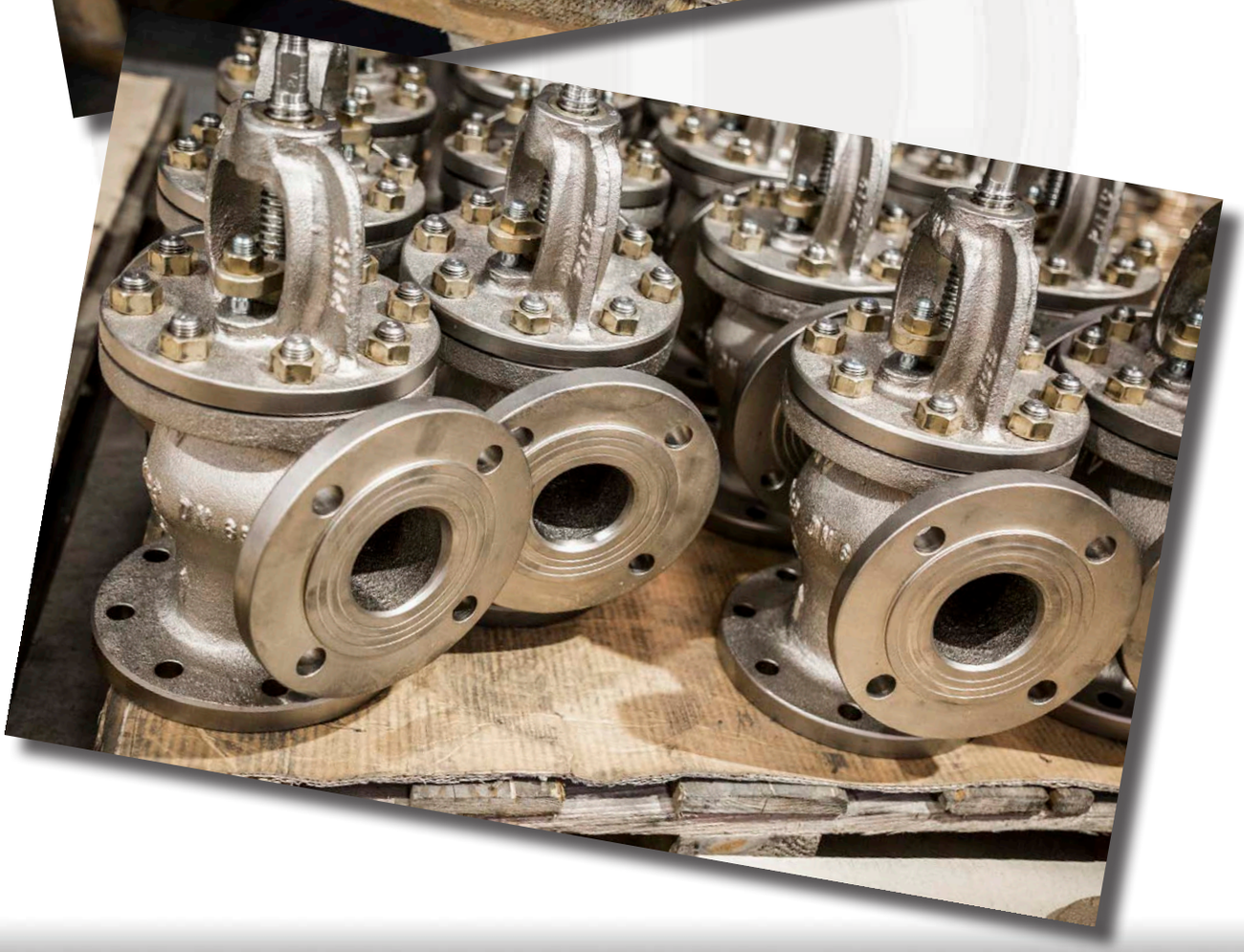

www.medanaevisca.it

Rubinetti automatici di decantazione flangiati DN40 PN6
Automatic decantation cocks flanged ND40 NP6

Tab.170

Conform to:
UNI EN1092

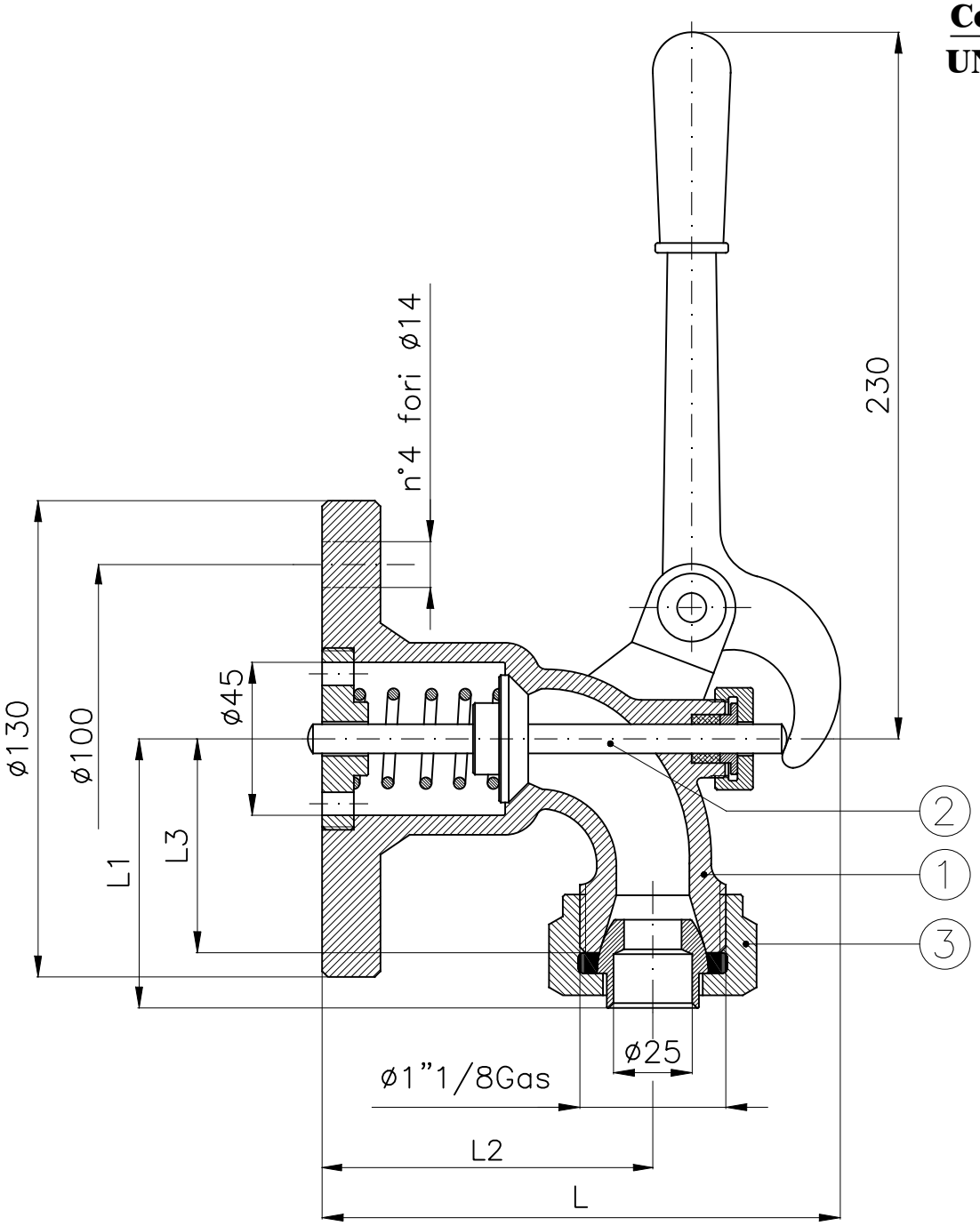

DN	L (B)	L (Gs/A)	L1 (B)	L1 (Gs/A)	L2 (B)	L2 (Gs/A)	L3 (B)	L3 (Gs/A)	Weight (Kg)
20/40	160	170	70	80	91	96	54	65	3

Combinazione materiali standard – Standard materials Combination			
		B/316	GS/316
ITEM	DENOMINAZIONE DENOMINATION	MATERIALE MATERIAL	MATERIALE MATERIAL
01	Body	Bronze UNI EN1982 G-CuSn5Zn5Pb5	Nodular cast iron EN-GJS-400-15U UNI EN1563
02	Stem	Stainless steel AISI316 UNI EN10088	Stainless steel AISI316 UNI EN10088
03	Nut	Brass CW617N (OT58)	Brass CW617N (OT58)
Nota: Combinazioni materiali non standard a richiesta Note: Non standard materials combinations on request			

Conform to:

UNI EN1092
NM466801

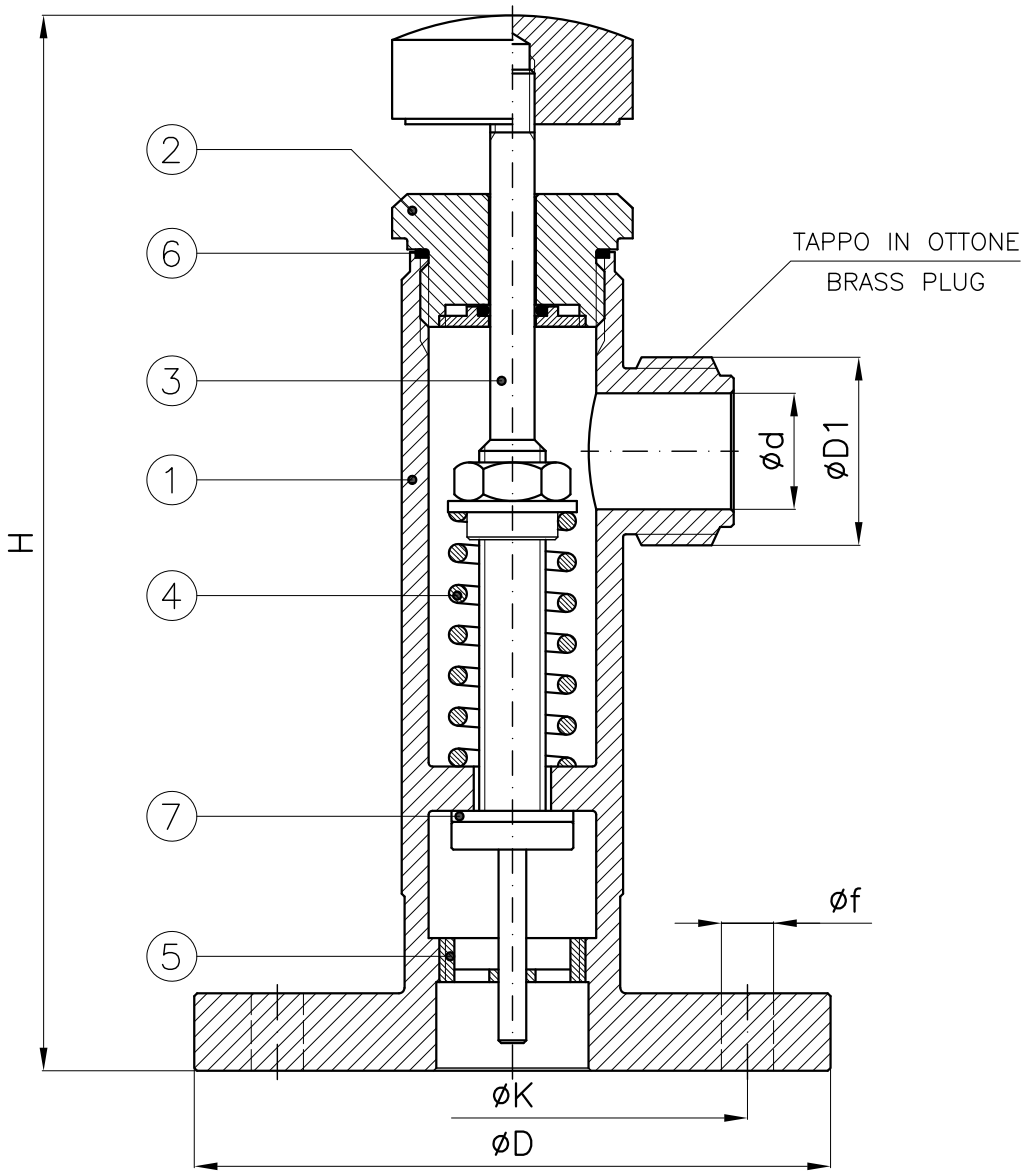

✻ : Filettatura GAS

✻ : *BSPP threaded*

				PN6 – NP6				PN16 – NP16				
DN	D1	d	H	D	K	f	n°fori f	D	K	f	Holes NO. f	Weight (Kg)
40	1"Gas	25	215	130	100	14	4	150	110	18	4	4.5
40	34x3M (UNI25)	25	215	130	100	14	4	150	110	18	4	4.5

Combinazione materiali standard – Standard materials Combination					
		316/316			316/316
ITEM	DENOMINAZIONE DENOMINATION	MATERIALE MATERIAL	ITEM	DENOMINAZIONE DENOMINATION	MATERIALE MATERIAL
01	Body	Stainless steel AISI316 UNI EN10088	05	Stem guide	Stainless steel AISI316 UNI EN10088
02	Cover	Stainless steel AISI316 UNI EN10088	06	Cover gasket	PTFE
03	Stem	Stainless steel AISI316 UNI EN10088	07	Seat seal	PTFE
04	Spring	Stainless steel AISI316 UNI EN10088			

Nota: Combinazioni materiali non standard a richiesta
Note: Non standard materials combinations on request

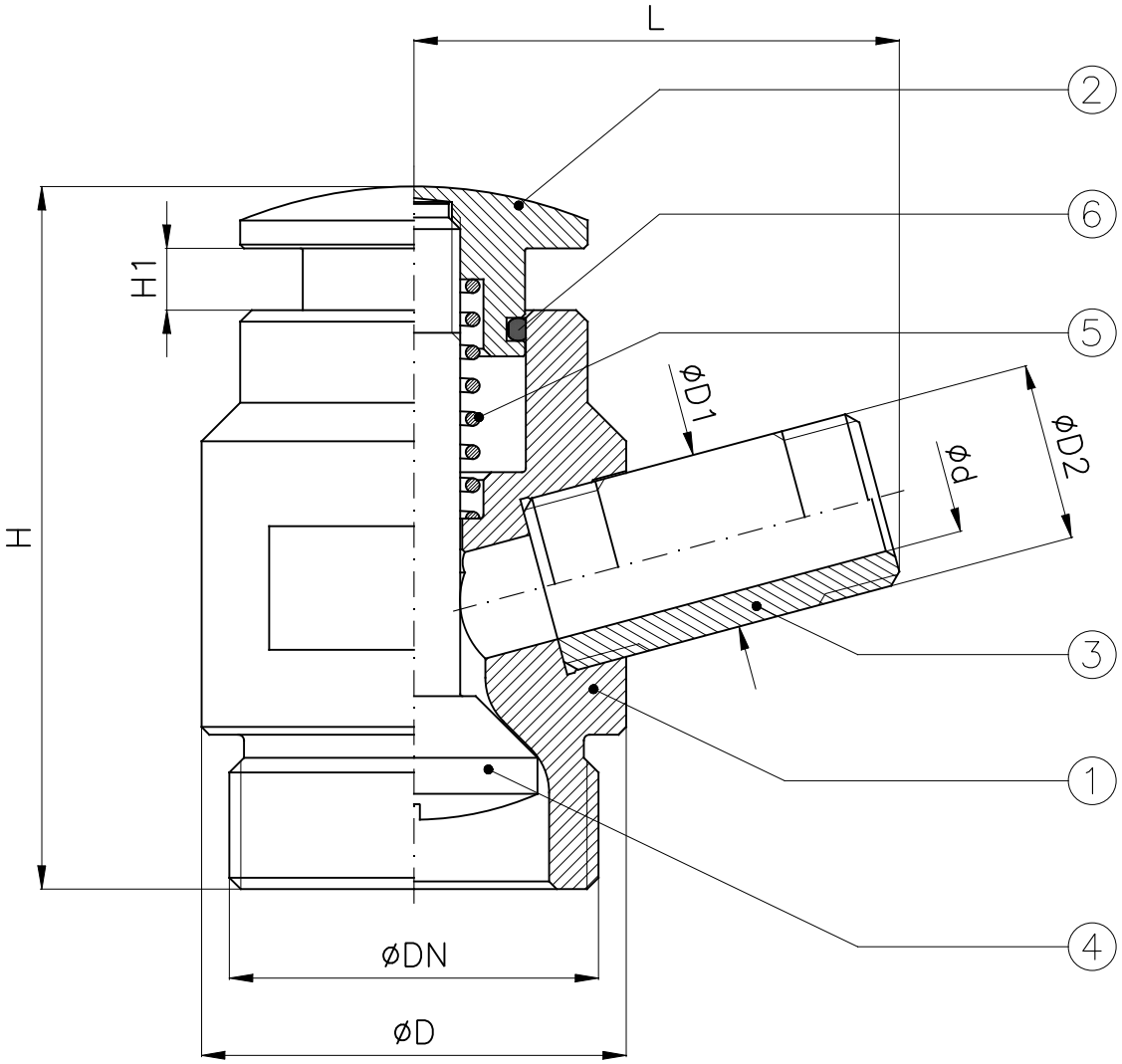

✻: Filettatura GAS
✻: *BSPP threaded*

DN	D	D1	D2 (Gas)	d	H	H1	L	Weight (Kg)
1/2"	28	14	1/4"	8.5	68	5	36	0.3
3/4"	32	18	3/8"	10	76	6	46	0.4
1"	36	18	3/8"	10	80	6	49	0.6
1"1/4	50	23	5/8"	13	86	7	59	1.1
1"1/2	55	23	5/8"	14	91	8	62.5	1.2

Combinazione materiali standard – Standard materials Combination			
		0/0	316/316
ITEM	DENOMINAZIONE DENOMINATION	MATERIALE MATERIAL	MATERIALE MATERIAL
01	Body	Brass CW617N (OT58)	Stainless steel AISI316 UNI EN10088
02	Pushbutton	Brass CW617N (OT58)	Stainless steel AISI316 UNI EN10088
03	Nipple	Brass CW617N (OT58)	Stainless steel AISI316 UNI EN10088
04	Stem	Brass CW617N (OT58)	Stainless steel AISI316 UNI EN10088
05	Spring	Steel UNI EN10270	Stainless steel UNI EN10151
06	Gasket	VITON	VITON

Nota: Combinazioni materiali non standard a richiesta
Note: Non standard materials combinations on request

Conform to:
UNI EN1092

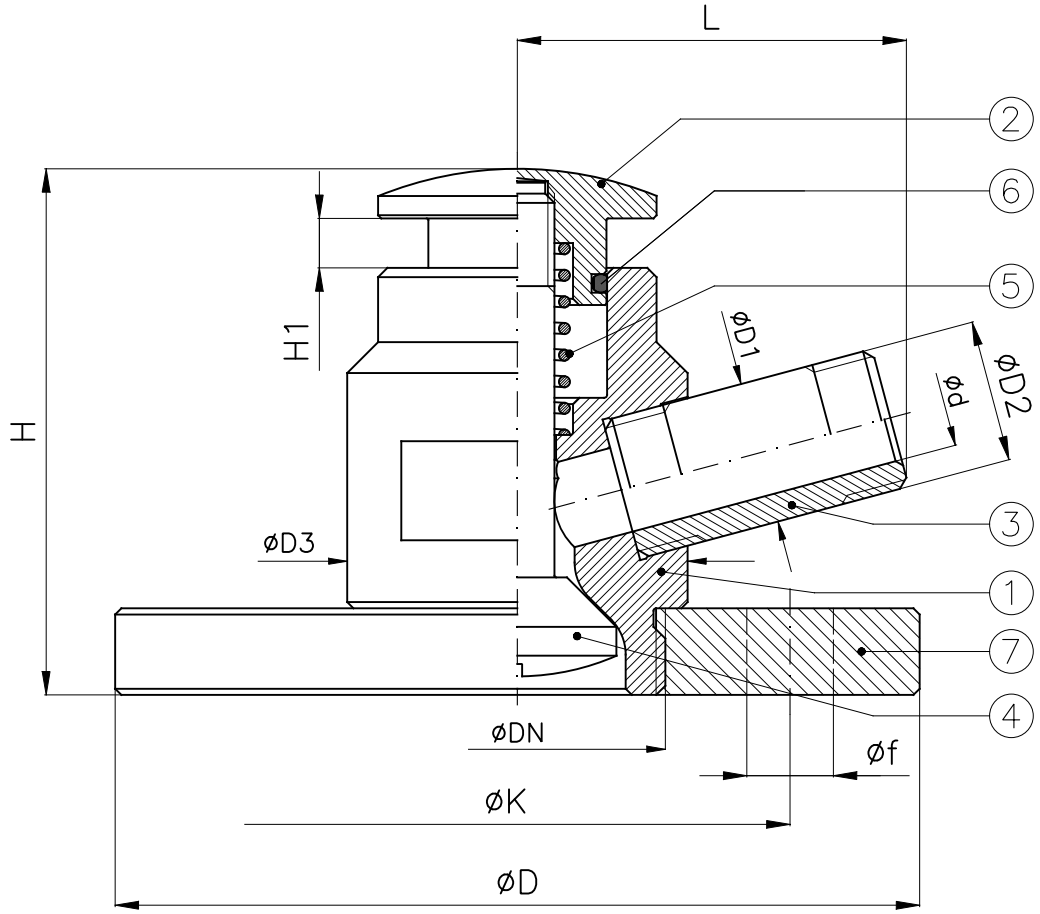

								PN6					PN10					PN16				
DN	D1	D2 (Gas)	D3	d	H	H1	L	D	K	f	Holes NO. f	Weight (Kg)	D	K	f	Holes NO. f	Weight (Kg)	D	K	f	Holes NO. f	Weight (Kg)
1/2"	14	1/4"	28	8.5	68	5	36	80	55	11	4	0.7	95	65	14	4	0.9	95	65	14	4	0.9
3/4"	18	3/8"	32	10	76	6	46	90	65	11	4	1.05	105	75	14	4	1.3	105	75	14	4	1.3
1"	18	3/8"	36	10	80	6	49	100	75	11	4	1.5	115	85	14	4	1.8	115	85	14	4	1.8
1"1/4	23	5/8"	50	13	86	7	59	120	90	14	4	2.5	140	100	18	4	3.1	140	100	18	4	3.1
1"1/2	23	5/8"	55	14	91	8	62.5	130	100	14	4	3.1	150	110	18	4	3.7	150	110	18	4	3.7

Combinazione materiali standard – Standard materials Combination			
		0/0	316/316
ITEM	DENOMINAZIONE DENOMINATION	MATERIALE MATERIAL	MATERIALE MATERIAL
01	Body	Brass CW617N (OT58)	Stainless steel AISI316 UNI EN10088
02	Pushbutton	Brass CW617N (OT58)	Stainless steel AISI316 UNI EN10088
03	Nipple	Brass CW617N (OT58)	Stainless steel AISI316 UNI EN10088
04	Stem	Brass CW617N (OT58)	Stainless steel AISI316 UNI EN10088
05	Spring	Steel UNI EN10270	Stainless steel UNI EN10151
06	Gasket	VITON	VITON
07	Flange	Brass CW617N (OT58)	Stainless steel AISI316 UNI EN10088
Nota: Combinazioni materiali non standard a richiesta Note: Non standard materials combinations on request			

Valvole automatiche di decantazione PN6 - 16
Automatic decantation valves NP6 - 16

Tab.170SP

Conform to:
UNI EN1092
NE 428172

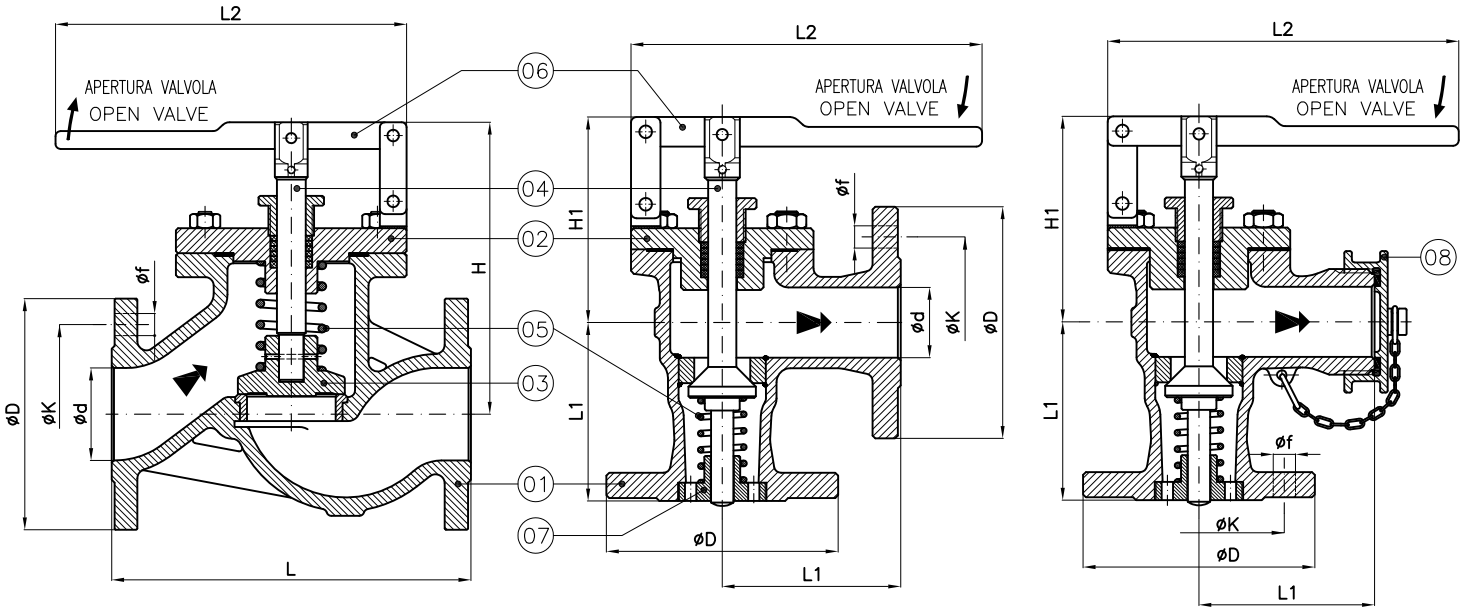

TAB.170SP/0 TAB.170SP/1 TAB.170SP/2

			PN6 – NP6									PN16 – NP16								
DN	d	Weight (Kg)	H (~)	H1 (~)	L	L1	L2	D	K	f	Holes NO. f	H (~)	H1 (~)	L	L1	L2	D	K	f	Holes NO. f
20	25	6	160	140	150	90	200	90	65	11	4	160	140	150	90	200	105	75	14	4
25	25	7	160	140	160	90	200	100	75	11	4	160	140	160	90	200	115	85	14	4
32	32	10	170	135	180	105	210	120	90	14	4	165	135	180	105	210	140	100	18	4
40	40	12	180	155	200	95	210	130	100	14	4	170	150	200	115	210	150	110	18	4
50	50	13	180	155	230	100	250	140	110	14	4	175	150	230	125	250	165	125	18	4
65	65	26				120		160	130	14	4				145		185	145	18	4
80	80	30		180		130	280	190	150	18	4		205		155	325	200	160	18	8

Combinazione materiali standard – Standard materials Combination			
		A/316	B/316
ITEM	DENOMINAZIONE DENOMINATION	MATERIALE MATERIAL	MATERIALE MATERIAL
01	Body	Cast steel GP240-GH UNI EN10213	Bronze UNI EN1982 G-CuSn5Zn5Pb5
02	Bonnet	Cast steel GP240-GH UNI EN10213	Bronze UNI EN1982 G-CuSn5Zn5Pb5
03	Disc	Stainless steel AISI316 UNI EN10088	Stainless steel AISI316 UNI EN10088
04	Stem	Stainless steel AISI316 UNI EN10088	Stainless steel AISI316 UNI EN10088
05	Spring	Steel UNI EN10270	Steel UNI EN10270
06	Lever	Steel (S275JR) UNI EN10025	Steel (S275JR) UNI EN10025
07	Disc spring	Brass CW617N (OT58)	Brass CW617N (OT58)
08	Plug	Brass CW509L (OT60)	Brass CW509L (OT60)
Nota: Combinazioni materiali non standard a richiesta Note: Non standard materials combinations on request			

www.medanaevisca.it

Eiettori idraulici serie PN16
Hydraulic ejectors class NP16

Tab.1168

Conform to:
UNI EN1092
NM585110

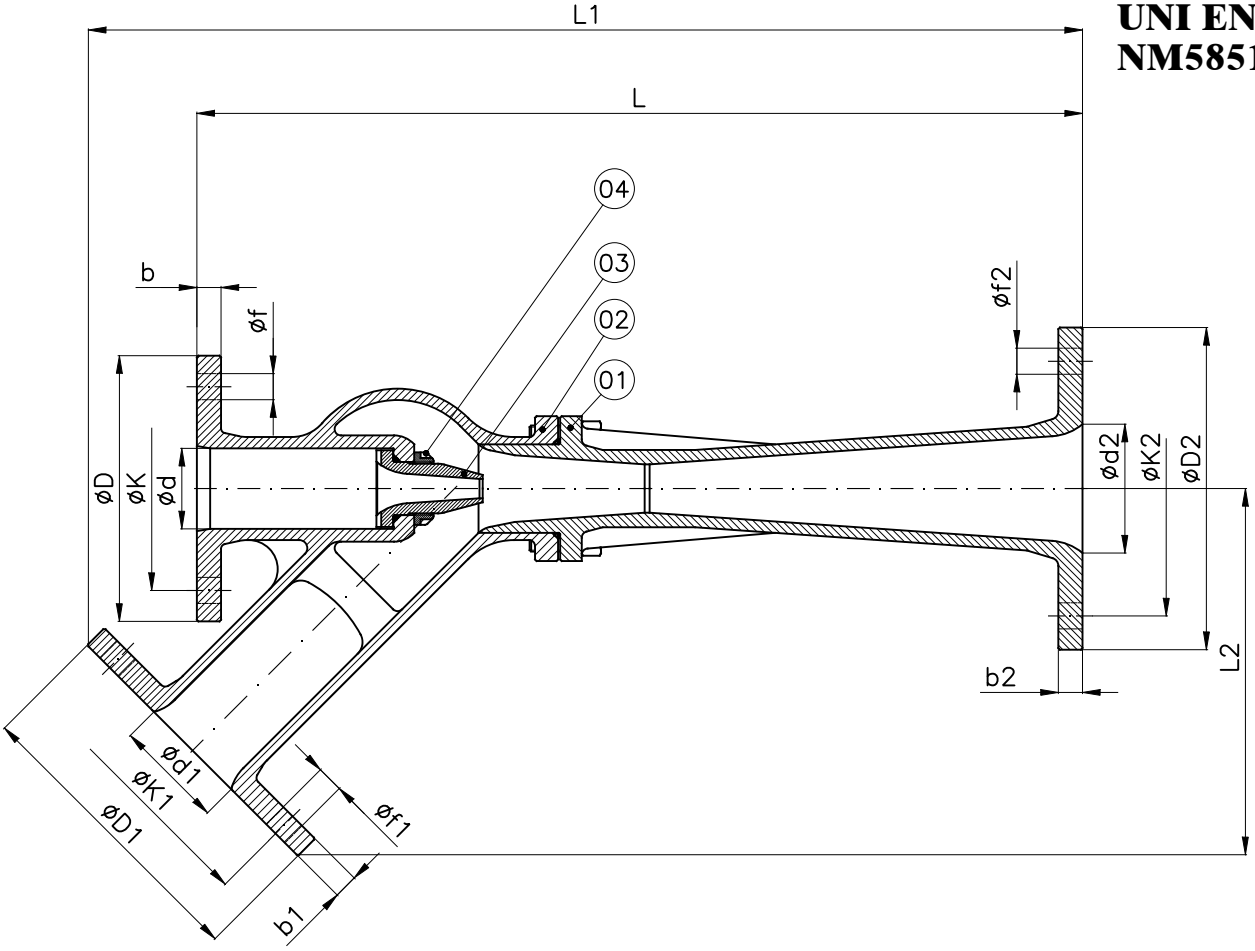

DN	b	D	d	K	f	Holes NO. f	b1	D1	d1	K1	f1	Holes NO. f1	b2	D2	d2	K2	f2	Holes NO. f2	L	L1	L2	Weight (Kg)
10T/h	16	165	50	125	18	4	16	165	50	125	18	4	13	185	65	145	18	4	515	570	215	18
15T/h	16	165	50	125	18	4	16	185	65	145	18	4	15	185	65	145	18	4	529	600	230	21
20T/h	16	165	50	125	18	4	16	185	65	145	18	4	14	200	80	160	18	8	550	620	230	22
50T/h	16	185	65	145	18	4	16	220	100	180	18	8	14	220	100	180	18	8	680	745	275	38
80T/h	20	200	80	160	18	8	22	250	125	210	18	8	16	250	125	210	18	8	825	891	305	76
120T/h	23	220	100	180	18	8	22	285	150	240	22	8	16	285	150	240	22	8	935	996	344	96

Combinazione materiali standard – Standard materials Combination			
		B/316	N/316
ITEM	DENOMINAZIONE DENOMINATION	MATERIALE MATERIAL	MATERIALE MATERIAL
01	Diffusor	Bronze UNI EN1982 G-CuSn5Zn5Pb5	Bronze UNI EN1982 G-CuSn10Zn2Ni2
02	Body	Bronze UNI EN1982 G-CuSn5Zn5Pb5	Bronze UNI EN1982 G-CuSn10Zn2Ni2
03	Nozzle	Stainless steel AISI316 UNI EN10088	Stainless steel AISI316 UNI EN10088
04	Nut	Stainless steel AISI316 UNI EN10088	Stainless steel AISI316 UNI EN10088
Nota: Combinazioni materiali non standard a richiesta Note: Non standard materials combinations on request			

Eiettori tipo "A"

Type "A" ejectors

Tab.EJ-A

Conform to:
UNI EN1092

Specifications

Motive liquid pressure: 1.5 – 15 bar g
Suction lift: up to 7mt
Suction capacities: more than 120 mc/h
Discharge head: up to 30 mt
Connections: all flanges DIN NP10
Test: each ejector is subject to careful testing and certified by an hydrostatic test report

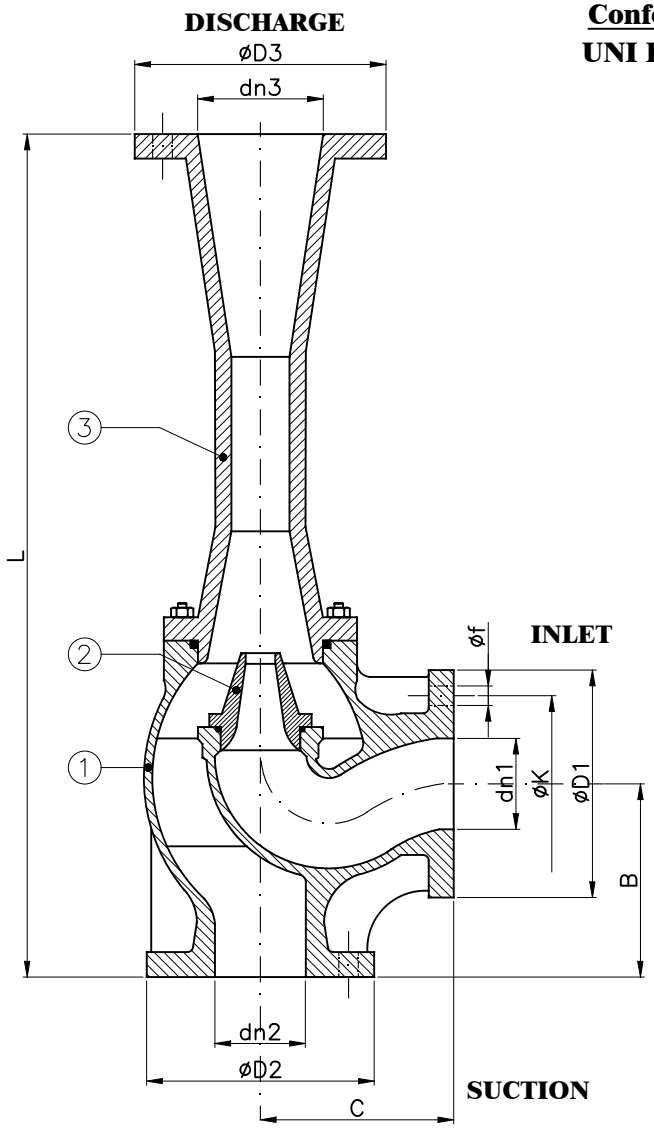

Ejectors "A" type
Coefficient values K=Qs/Qm=suction capacity/motive liquid consumption
Table 1

Suction Lift (mwc)	Motive Pressure (bar g)	Delivery head (mwc) 5	10	15	20	25	30
	1.5	0.55					
	2	0.6	0.2				
	3	1.1	0.5	0.24			
	4	1.45	0.8	0.48	0.25		
	5	1.8	1.05	0.72	0.4	0.25	
2mt	6	2.15	1.3	0.95	0.55	0.38	0.25
	7	2.5	1.5	1.06	0.7	0.5	0.35
	8	2.8	1.7	1.17	0.85	0.6	0.45
	9	3.1	1.9	1.3	0.95	0.7	0.45
	10	3.4	2.1	1.45	1.05	0.8	0.65
	11	3.6	2.3	1.6	1.15	0.9	0.75
	12	3.8	2.5	1.75	1.25	1	0.85

Ejectors "A" type
Coefficient values K=Qs/Qm=suction capacity/motive liquid consumption
Table 2

Suction Lift (mwc)	Motive Pressure (bar g)	Delivery head (mwc) 5	10	15	20	25	30
	1.5	0.27					
	2	0.54	0.17				
	3	0.81	0.39	0.18			
	4	1.08	0.61	0.35	0.18		
	5	1.35	0.8	0.5	0.32	0.18	
5mt	6	1.62	0.98	0.65	0.44	0.31	0.19
	7	1.81	1.12	0.8	0.55	0.41	0.3
	8	2	1.26	0.92	0.65	0.5	0.38
	9	2.18	1.39	1	0.75	0.58	0.45
	10	2.34	1.53	1.1	0.85	0.66	0.52
	11	2.5	1.67	1.2	0.93	0.72	0.59
	12	2.65	1.8	1.3	1	0.8	0.65

Example: required capacity: 100mc/h – delivery head: 15mwc
Motive pressure: 10 bar g – suction lift: 5 mwc
From table2: K=1.1
This ratio indicates the ejector will have a suction capacity equal to 1.1 mc for every mc of inlet liquid
Motive liquid consumption: 91 mc/h
from table A the size 100–125–150 is chosen

SIZE	Total capacity at discharge mc/h	dn1	D1	dn2	D2	dn3	D3	L	B	C	Weight (Kg)
40–50–65	24	40	150	50	165	65	185	515	100	105	23
50–65–65	28	50	165	65	185	65	185	570	125	130	33
65–65–80	42	65	185	65	185	80	200	680	125	130	38
80–80–100	70	80	200	80	200	100	220	800	170	170	54
100–100–125	120	100	220	100	220	125	250	1070	195	170	98
100–125–150	200	100	220	125	250	150	285	1335	130	185	118

DN	K	f	Holes No. f
40	110	18	4
50	125	18	4
65	145	18	4
80	160	18	8
100	180	18	8
125	210	18	8
150	240	22	8

Combinazione materiali standard – Standard materials Combination

		B/316	GS/316
ITEM	DENOMINAZIONE DENOMINATION	MATERIALE MATERIAL	MATERIALE MATERIAL
01	Head	Bronze UNI EN1982 G-CuSn5Zn5Pb5	Nodular cast iron EN-GJS-400-15U UNI EN1563
02	Nozzle	Stainless steel AISI316 UNI EN10088	Stainless steel AISI316 UNI EN10088
03	Diffusor	Bronze UNI EN1982 G-CuSn5Zn5Pb5	Nodular cast iron EN-GJS-400-15U UNI EN1563

Nota: Combinazioni materiali non standard a richiesta
Note: Non standard materials combinations on request

Specifications

Motive liquid pressure: 2 – 10 bar g
Suction lift: up to 6mt
Suction capacities: up to 30 mc/h
Discharge head: up to 20 mt
Test: each ejector is subject to careful testing and certified by an hydrostatic test report

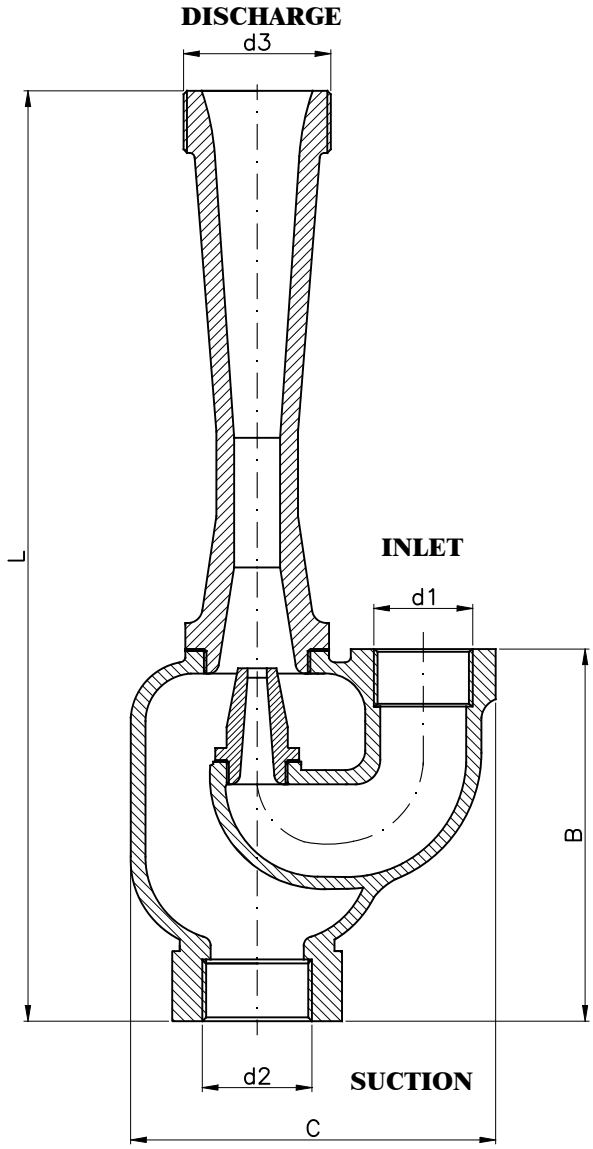

Ejectors "G/G" type

Coefficient values K=Qs/Qm=suction capacity/motive liquid consumption

Table 1

Suction Lift (mwc)	Motive Pressure (bar g)	Delivery head (mwc) 5	10	15	20
	2	0.57	0.17		
	3	1.05	0.42	0.18	
	4	1.39	0.68	0.36	0.17
	5	1.7	0.89	0.54	0.26
2mt	6	2.05	1.1	0.71	0.36
	7	2.4	1.28	0.8	0.45
	8	2.7	1.45	0.88	0.55
	9	2.98	1.6	0.97	0.62
	10	3.25	1.78	1.08	0.68

Ejectors "B/G" type

Coefficient values K=Qs/Qm=suction capacity/motive liquid consumption

Table 2

Suction Lift (mwc)	Motive Pressure (bar g)	Delivery head (mwc) 5	10	15	20
	2	0.5	0.14		
	3	0.75	0.32	0.14	
	4	1	0.5	0.25	0.14
	5	1.25	0.65	0.36	0.2
5mt	6	1.5	0.8	0.47	0.25
	7	1.68	0.92	0.57	0.31
	8	1.85	1.03	0.66	0.4
	9	2	1.14	0.72	0.47
	10	2.15	1.25	0.8	0.53

Example: required capacity: 72mc/h – delivery head: 5mwc
Motive pressure: 5 bar g – suction lift: 2 mwc
From table1: K=1.7
This ratio indicates the ejector will have a suction capacity equal to 1.7 mc for every mc of inlet liquid
Motive liquid consumption: 4 mc/h
from table B/G the size G1 is chosen

✻ : BSPP threaded

SIZE	Total capacity at discharge l/h	d1	d2	d3	L	B	C	Weight (Kg)
B0	1500	3/4"	3/4"	3/4"	223	92	93	2
B1	3000	1"	1"	1"	275	110	115	4
B2	8000	1"1/4	1"1/4	1"1/2	305	120	128	5
G1	14500	1"1/2	1"1/2	2"	390	152	150	8
G2	26000	2"	2"	2"1/2	490	182	180	14
G3	40000	2"1/2	2"1/2	3"	635	215	200	25

Combinazione materiali standard – Standard materials Combination

ITEM	DENOMINAZIONE DENOMINATION	B/316 MATERIALE MATERIAL
01	Head	Bronze UNI EN1982 G-CuSn5Zn5Pb5
02	Nozzle	Stainless steel AISI316 UNI EN10088
03	Diffusor	Bronze UNI EN1982 G-CuSn5Zn5Pb5

Nota: Combinazioni materiali non standard a richiesta
Note: Non standard materials combinations on request

Specifications

Conform to:
UNI EN1092

Motive liquid pressure: 1.5 – 15 bar g
Suction lift: up to 7mt
Suction capacities: more than 150 mc/h
Discharge head: up to 30 mt
Connections: all flanges DIN NP10
Test: each ejector is subject to careful testing and certified by an hydrostatic test report

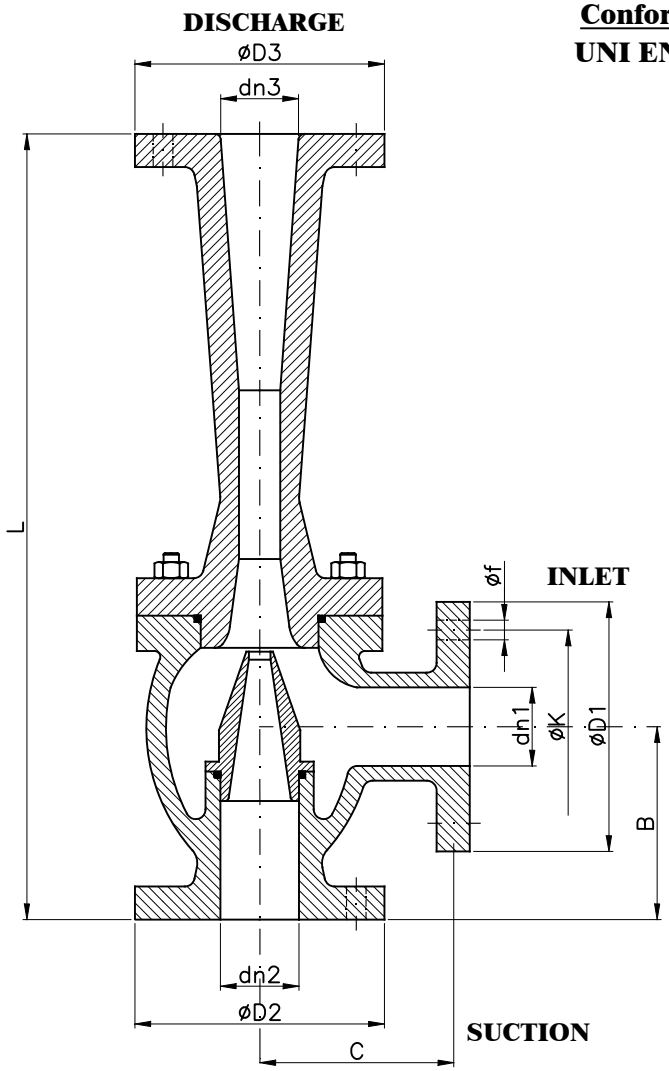

Ejectors "E" type
Coefficient values K=Qs/Qm=suction capacity/motive liquid consumption
Table 1

Suction Lift (mwc)	Motive Pressure (bar g)	Delivery head (mwc) 5	10	15	20	25	30
	1.5	0.55					
	2	0.6	0.2				
	3	1.1	0.5	0.24			
	4	1.45	0.8	0.48	0.25		
	5	1.8	1.05	0.72	0.4	0.25	
2mt	6	2.15	1.3	0.95	0.55	0.38	0.25
	7	2.5	1.5	1.06	0.7	0.5	0.35
	8	2.8	1.7	1.17	0.85	0.6	0.45
	9	3.1	1.9	1.3	0.95	0.7	0.55
	10	3.4	2.1	1.45	1.05	0.8	0.65
	11	3.6	2.3	1.6	1.15	0.9	0.75
	12	3.8	2.5	1.75	1.25	1	0.85

Ejectors "E" type
Coefficient values K=Qs/Qm=suction capacity/motive liquid consumption
Table 2

Suction Lift (mwc)	Motive Pressure (bar g)	Delivery head (mwc) 5	10	15	20	25	30
	1.5	0.27					
	2	0.54	0.17				
	3	0.81	0.39	0.18			
	4	1.08	0.61	0.35	0.18		
	5	1.35	0.8	0.5	0.32	0.18	
5mt	6	1.62	0.98	0.65	0.44	0.31	0.19
	7	1.81	1.12	0.8	0.55	0.41	0.3
	8	2	1.26	0.92	0.65	0.5	0.38
	9	2.18	1.39	1	0.75	0.58	0.45
	10	2.34	1.53	1.1	0.85	0.66	0.52
	11	2.5	1.67	1.2	0.93	0.72	0.59
	12	2.65	1.8	1.3	1	0.8	0.65

Example: required capacity: 72mc/h – delivery head: 10mwc
Motive pressure: 7 bar g – suction lift: 2 mwc
From table1: K=1.5
This ratio indicates the ejector will have a suction capacity equal to 1.5 mc for every mc of inlet liquid
Motive liquid consumption: 48 mc/h
from table E the size 80–125–125 is chosen

SIZE	Total capacity at discharge mc/h	dn1	D1	dn2	D2	dn3	D3	L	B	C	Weight (Kg)
32–40–40	10	32	140	40	150	40	150	395	90	105	17
40–40–50	18	40	150	40	150	50	165	510	80	120	20
65–65–80	42	65	185	65	185	80	200	660	135	130	30
80–80–100	70	80	200	80	200	100	220	775	143	140	48
80–125–125	120	80	200	125	250	125	250	1030	195	170	95
100–150–150	200	100	220	150	285	150	285	1300	130	185	113

DN	K	f	Holes No. f
32	100	18	4
40	110	18	4
50	125	18	4
65	145	18	4
80	160	18	8
100	180	18	8
125	210	18	8
150	240	22	8

Combinazione materiali standard – Standard materials Combination

		B/316	GS/316
ITEM	DENOMINAZIONE DENOMINATION	MATERIALE MATERIAL	MATERIALE MATERIAL
01	Head	Bronze UNI EN1982 G–CuSn5Zn5Pb5	Nodular cast iron EN–GJS–400–15U UNI EN1563
02	Nozzle	Stainless steel AISI316 UNI EN10088	Stainless steel AISI316 UNI EN10088
03	Diffusor	Bronze UNI EN1982 G–CuSn5Zn5Pb5	Nodular cast iron EN–GJS–400–15U UNI EN1563

Nota: Combinazioni materiali non standard a richiesta
Note: Non standard materials combinations on request

2 Elements

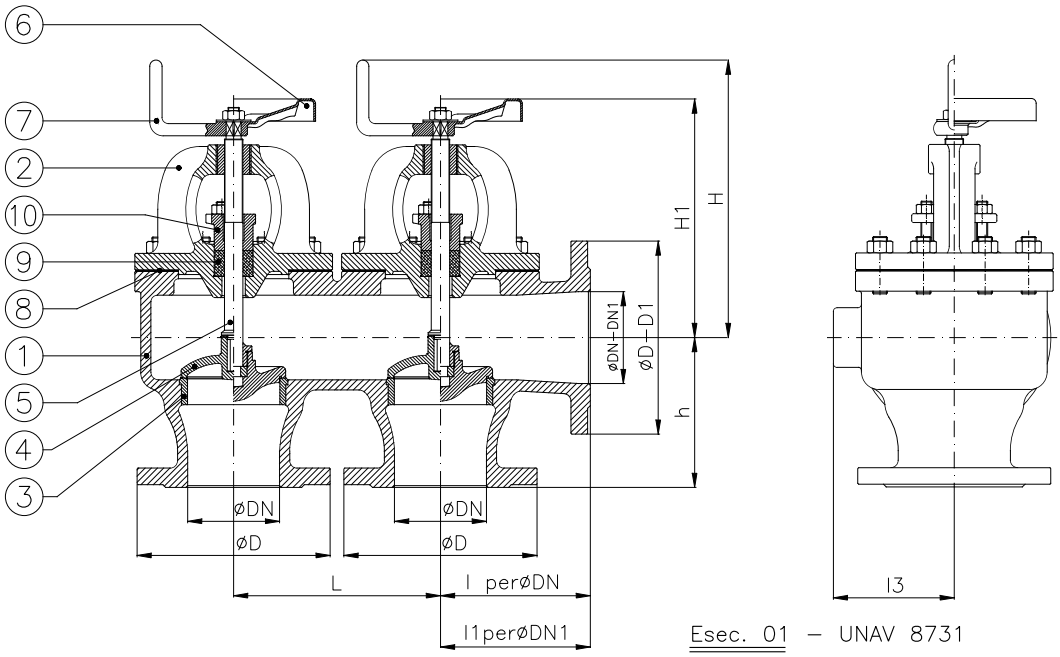

Esec. 02 – UNAV 8732
Semiautomatica con manovella
With loose disc and handle (SDNR)

Esec. 01 – UNAV 8731
Comandata con volantino
With fixed disc and handwheel (SDSL)

3 Elements

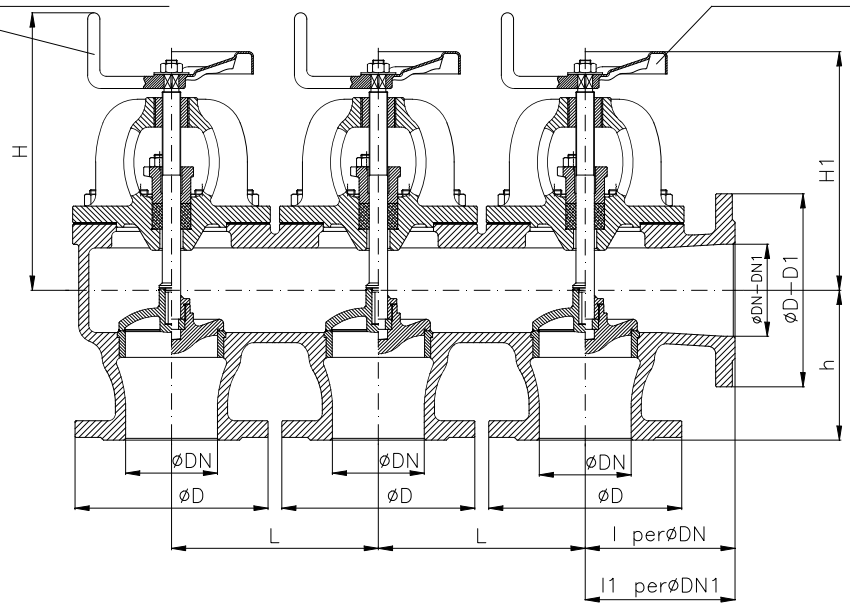

4 Elements

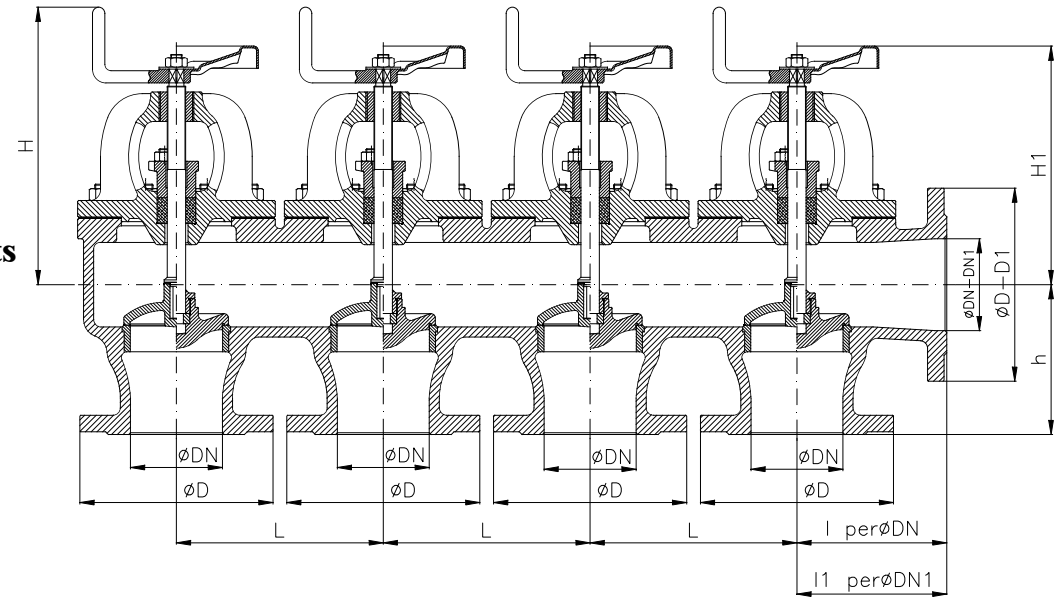

Casse valvole serie pesante PN6 - UNAV 8731-8732 tipo I

Distribution boxes suction type,heavy class NP6 - UNAV 8731-8732 type I

Tab.135-I

DN (ASPIRAZIONE) (SUCTION)	DN1 (MANDATA) (DELIVERY)	D	D1	H (APERTA) (OPEN)	H1 (APERTA) (OPEN)	h	L	l	l1	l3 (~)	Weight (Kg) 2 elements	Weight (Kg) 3 elements	Weight (Kg) 4 elements
40	40–50	130	140	240	210	100	145	95	100	80	23	34	46
50	50–65	140	160	250	220	105	145	100	105	90	25	36	48
65	65–80	160	190	300	260	130	195	115	125	100	39	54	69
80	80–100	190	210	305	270	140	195	130	150	125	50	72	100
100	100–125	210	240	340	305	160	225	150	160	140	70	100	138
125	125–150	240	265	380	350	180	255	175	185	160	127	148	193
150	150–175	265	295	405	375	205	275	200	210	170			
175	175–200	295	320	460	435	235	315	225	235	195			
200	200–250	320	375	475	455	260	340	250	270	210			

Combinazione materiali standard – Standard materials Combination				
		B/B	B/316	G/316
ITEM	DENOMINAZIONE DENOMINATION	MATERIALE MATERIAL	MATERIALE MATERIAL	MATERIALE MATERIAL
01	Body	Bronze UNI EN1982 G-CuSn5Zn5Pb5	Bronze UNI EN1982 G-CuSn5Zn5Pb5	Cast iron UNI EN1561 EN-GJL-250
02	Bonnet	Bronze UNI EN1982 G-CuSn5Zn5Pb5	Bronze UNI EN1982 G-CuSn5Zn5Pb5	Cast iron UNI EN1561 EN-GJL-250
03	Body seat	Bronze UNI EN1982 G-CuSn5Zn5Pb5	Bronze UNI EN1982 G-CuSn5Zn5Pb5	Stainless steel AISI316 UNI EN10088
04	Disc (≤ DN80)	Bronze UNI EN1982 G-CuSn5Zn5Pb5	Stainless steel AISI316 UNI EN10088	Stainless steel AISI316 UNI EN10088
04	Disc (≥ DN100)	Bronze UNI EN1982 G-CuSn5Zn5Pb5	Stainless steel AISI316 UNI EN10088	Cast steel GP240-GH UNI EN10213 plus AISI316 facing welding
05	Stem	Brass CW617N (OT58)	Stainless steel AISI316 UNI EN10088	Stainless steel AISI316 UNI EN10088
06	Handwheel	Sheet of carbon steel	Sheet of carbon steel	Sheet of carbon steel
07	Handle	Steel A37 UNI EN10217-1	Steel A37 UNI EN10217-1	Steel A37 UNI EN10217-1
08	Gasket	Planiflex KG carbo/C PF81	Planiflex KG carbo/C PF81	Planiflex KG carbo/C PF81
09	Packing	Carbograph GR8800	Carbograph GR8800	Carbograph GR8800
10	Gland bushing	Brass CW509L (OT60)	Brass CW509L (OT60)	Bronze UNI EN1982 G-CuSn5Zn5Pb5
Nota: Combinazioni materiali non standard a richiesta Note: Non standard materials combinations on request				

Combinazione materiali standard – Standard materials Combination				
		G/B	GS/316	GS/B
ITEM	DENOMINAZIONE DENOMINATION	MATERIALE MATERIAL	MATERIALE MATERIAL	MATERIALE MATERIAL
01	Body	Cast iron UNI EN1561 EN-GJL-250	Nodular cast iron EN-GJS-400-15U UNI EN1563	Nodular cast iron EN-GJS-400-15U UNI EN1563
02	Bonnet	Cast iron UNI EN1561 EN-GJL-250	Nodular cast iron EN-GJS-400-15U UNI EN1563	Nodular cast iron EN-GJS-400-15U UNI EN1563
03	Body seat	Bronze UNI EN1982 G-CuSn5Zn5Pb5	Stainless steel AISI316 UNI EN10088	Bronze UNI EN1982 G-CuSn5Zn5Pb5
04	Disc (≤ DN80)	Bronze UNI EN1982 G-CuSn5Zn5Pb5	Stainless steel AISI316 UNI EN10088	Bronze UNI EN1982 G-CuSn5Zn5Pb5
04	Disc (≥ DN100)	Bronze UNI EN1982 G-CuSn5Zn5Pb5	Cast steel GP240-GH UNI EN10213 plus AISI316 facing welding	Bronze UNI EN1982 G-CuSn5Zn5Pb5
05	Stem	Brass CW617N (OT58)	Stainless steel AISI316 UNI EN10088	Brass CW617N (OT58)
06	Handwheel	Sheet of carbon steel	Sheet of carbon steel	Sheet of carbon steel
07	Handle	Steel A37 UNI EN10217-1	Steel A37 UNI EN10217-1	Steel A37 UNI EN10217-1
08	Gasket	Planiflex KG carbo/C PF81	Planiflex KG carbo/C PF81	Planiflex KG carbo/C PF81
09	Packing	Carbograph GR8800	Carbograph GR8800	Carbograph GR8800
10	Gland bushing	Bronze UNI EN1982 G-CuSn5Zn5Pb5	Bronze UNI EN1982 G-CuSn5Zn5Pb5	Bronze UNI EN1982 G-CuSn5Zn5Pb5
Nota: Combinazioni materiali non standard a richiesta Note: Non standard materials combinations on request				

2 Elements

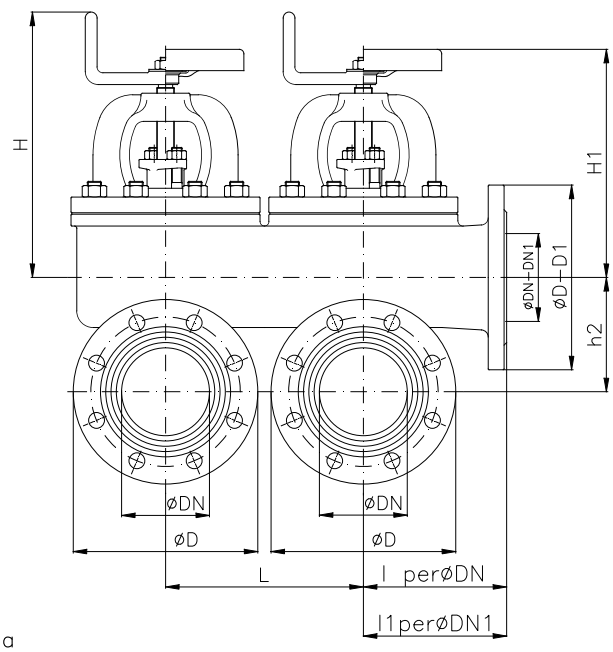

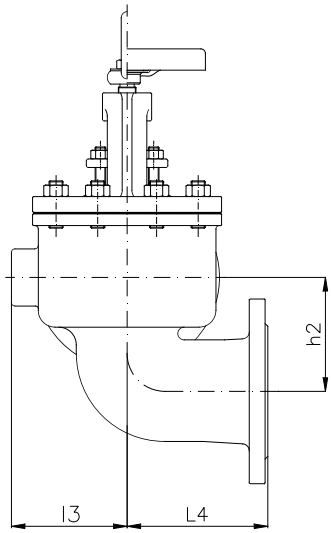

Esec. 02 – UNAV 8732
Semiautomatica con manovella
With loose disc and handle (SDNR)

Esec. 01 – UNAV 8731
Comandata con volantino
With fixed disc and handwheel (SDSL)

3 Elements

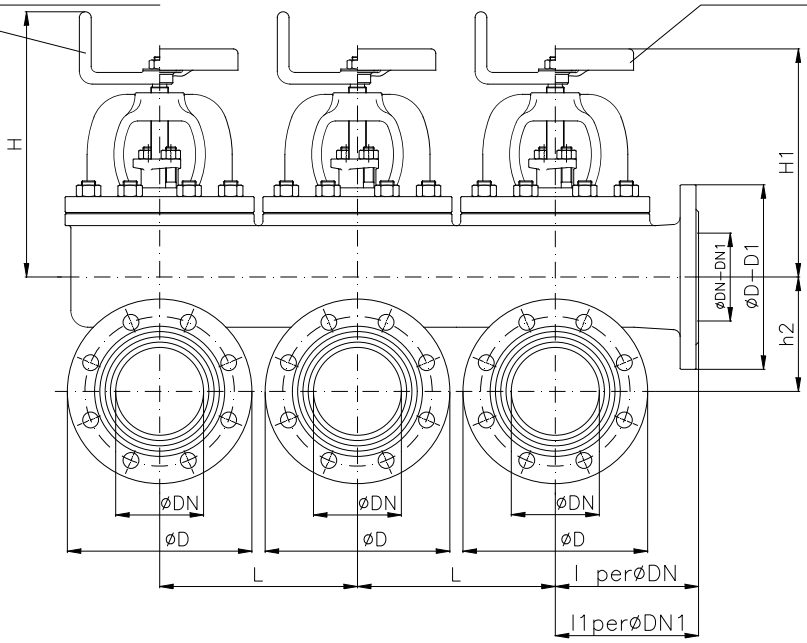

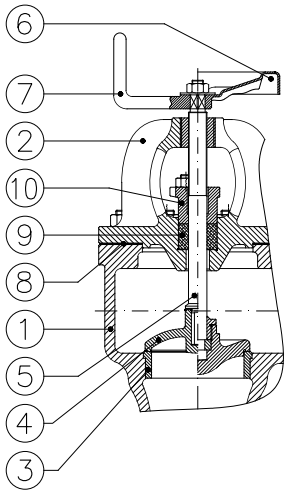

4 Elements

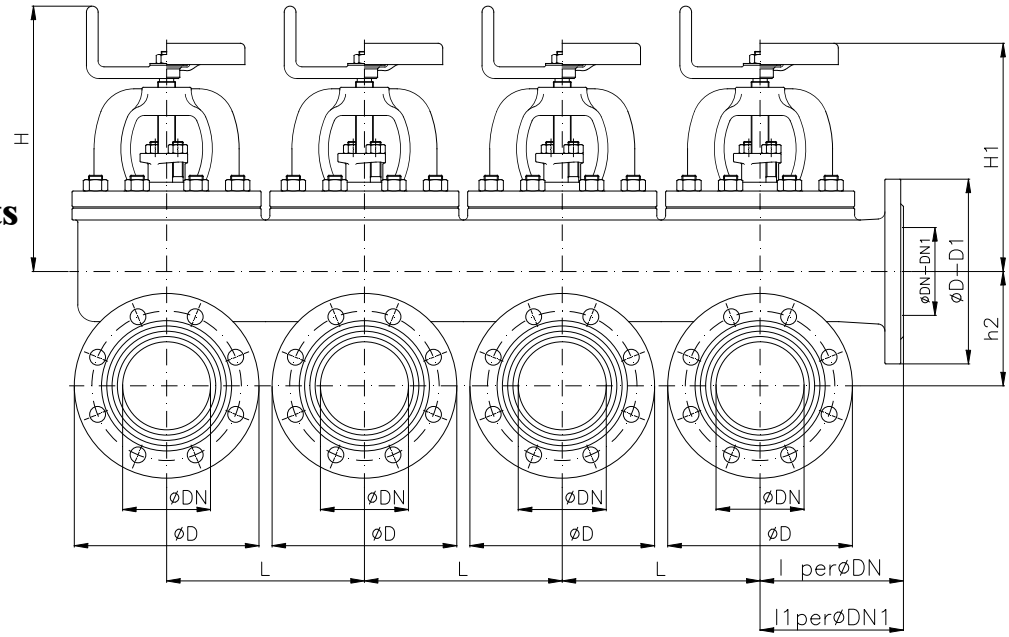

Casse valvole serie pesante PN6 - UNAV 8731-8732 tipo II

Distribution boxes suction type,heavy class NP6 - UNAV 8731-8732 type II

Tab.135-II

DN (ASPIRAZIONE) (SUCTION)	DN1 (MANDATA) (DELIVERY)	D	D1	H (APERTA) (OPEN)	H1 (APERTA) (OPEN)	h2	L	L4	l	l1	l3 (~)	Weight (Kg) 2 elements	Weight (Kg) 3 elements	Weight (Kg) 4 elements
40	40–50	130	140	240	210	70	145	95	95	100	80			45
50	50–65	140	160	250	220	80	145	110	100	105	90			52
65	65–80	160	190	300	260	100	195	125	115	125	100		61	
80	80–100	190	210	305	270	110	195	150	130	150	125	56	80	105
100	100–125	210	240	340	305	130	225	160	150	160	140	75	110	142
125	125–150	240	265	380	350	155	255	180	175	185	160			
150	150–175	265	295	405	375	180	275	195	200	210	170			
175	175–200	295	320	460	435	210	315	220	225	235	195			
200	200–250	320	375	475	455	230	340	235	250	270	210			

Combinazione materiali standard – Standard materials Combination

		B/B	B/316	G/316
ITEM	DENOMINAZIONE DENOMINATION	MATERIALE MATERIAL	MATERIALE MATERIAL	MATERIALE MATERIAL
01	Body	Bronze UNI EN1982 G-CuSn5Zn5Pb5	Bronze UNI EN1982 G-CuSn5Zn5Pb5	Cast iron UNI EN1561 EN-GJL-250
02	Bonnet	Bronze UNI EN1982 G-CuSn5Zn5Pb5	Bronze UNI EN1982 G-CuSn5Zn5Pb5	Cast iron UNI EN1561 EN-GJL-250
03	Body seat	Bronze UNI EN1982 G-CuSn5Zn5Pb5	Bronze UNI EN1982 G-CuSn5Zn5Pb5	Stainless steel AISI316 UNI EN10088
04	Disc (≤ DN80)	Bronze UNI EN1982 G-CuSn5Zn5Pb5	Stainless steel AISI316 UNI EN10088	Stainless steel AISI316 UNI EN10088
04	Disc (≥ DN100)	Bronze UNI EN1982 G-CuSn5Zn5Pb5	Stainless steel AISI316 UNI EN10088	Cast steel GP240-GH UNI EN10213 plus AISI316 facing welding
05	Stem	Brass CW617N (OT58)	Stainless steel AISI316 UNI EN10088	Stainless steel AISI316 UNI EN10088
06	Handwheel	Sheet of carbon steel	Sheet of carbon steel	Sheet of carbon steel
07	Handle	Steel A37 UNI EN10217-1	Steel A37 UNI EN10217-1	Steel A37 UNI EN10217-1
08	Gasket	Planiflex KG carbo/C PF81	Planiflex KG carbo/C PF81	Planiflex KG carbo/C PF81
09	Packing	Carbograph GR8800	Carbograph GR8800	Carbograph GR8800
10	Gland bushing	Brass CW509L (OT60)	Brass CW509L (OT60)	Bronze UNI EN1982 G-CuSn5Zn5Pb5

Nota: Combinazioni materiali non standard a richiesta
Note: Non standard materials combinations on request

Combinazione materiali standard – Standard materials Combination

		G/B	GS/316	GS/B
ITEM	DENOMINAZIONE DENOMINATION	MATERIALE MATERIAL	MATERIALE MATERIAL	MATERIALE MATERIAL
01	Body	Cast iron UNI EN1561 EN-GJL-250	Nodular cast iron EN-GJS-400-15U UNI EN1563	Nodular cast iron EN-GJS-400-15U UNI EN1563
02	Bonnet	Cast iron UNI EN1561 EN-GJL-250	Nodular cast iron EN-GJS-400-15U UNI EN1563	Nodular cast iron EN-GJS-400-15U UNI EN1563
03	Body seat	Bronze UNI EN1982 G-CuSn5Zn5Pb5	Stainless steel AISI316 UNI EN10088	Bronze UNI EN1982 G-CuSn5Zn5Pb5
04	Disc (≤ DN80)	Bronze UNI EN1982 G-CuSn5Zn5Pb5	Stainless steel AISI316 UNI EN10088	Bronze UNI EN1982 G-CuSn5Zn5Pb5
04	Disc (≥ DN100)	Bronze UNI EN1982 G-CuSn5Zn5Pb5	Cast steel GP240-GH UNI EN10213 plus AISI316 facing welding	Bronze UNI EN1982 G-CuSn5Zn5Pb5
05	Stem	Brass CW617N (OT58)	Stainless steel AISI316 UNI EN10088	Brass CW617N (OT58)
06	Handwheel	Sheet of carbon steel	Sheet of carbon steel	Sheet of carbon steel
07	Handle	Steel A37 UNI EN10217-1	Steel A37 UNI EN10217-1	Steel A37 UNI EN10217-1
08	Gasket	Planiflex KG carbo/C PF81	Planiflex KG carbo/C PF81	Planiflex KG carbo/C PF81
09	Packing	Carbograph GR8800	Carbograph GR8800	Carbograph GR8800
10	Gland bushing	Bronze UNI EN1982 G-CuSn5Zn5Pb5	Bronze UNI EN1982 G-CuSn5Zn5Pb5	Bronze UNI EN1982 G-CuSn5Zn5Pb5

Nota: Combinazioni materiali non standard a richiesta
Note: Non standard materials combinations on request

2 Elements

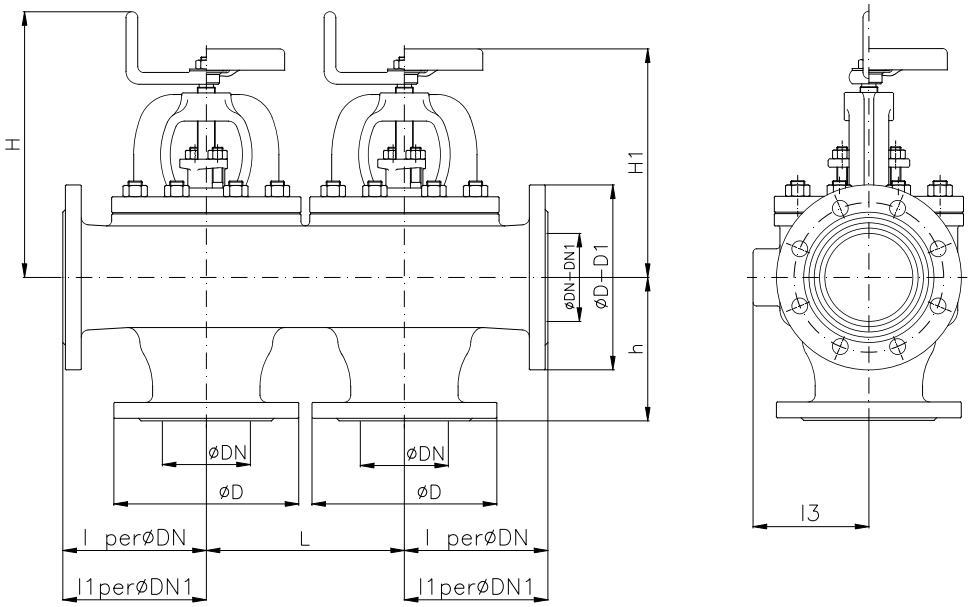

Esec. 02 – UNAV 8732
Semiautomatica con manovella
With loose disc and handle (SDNR)

Esec. 01 – UNAV 8731
Comandata con volantino
With fixed disc and handwheel (SDSL)

3 Elements

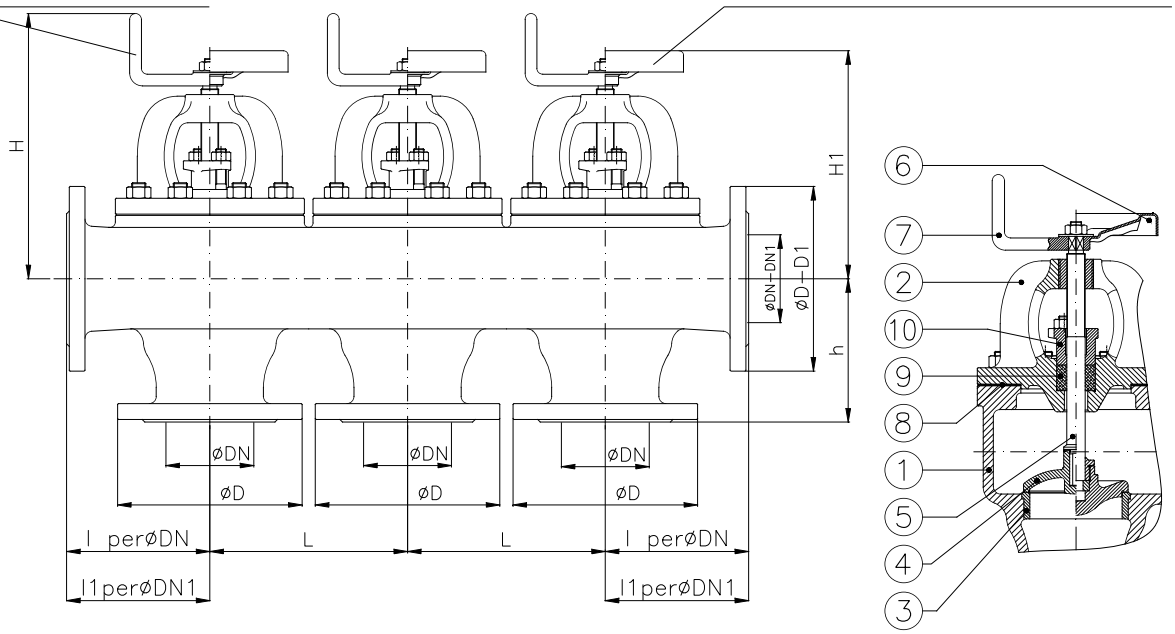

4 Elements

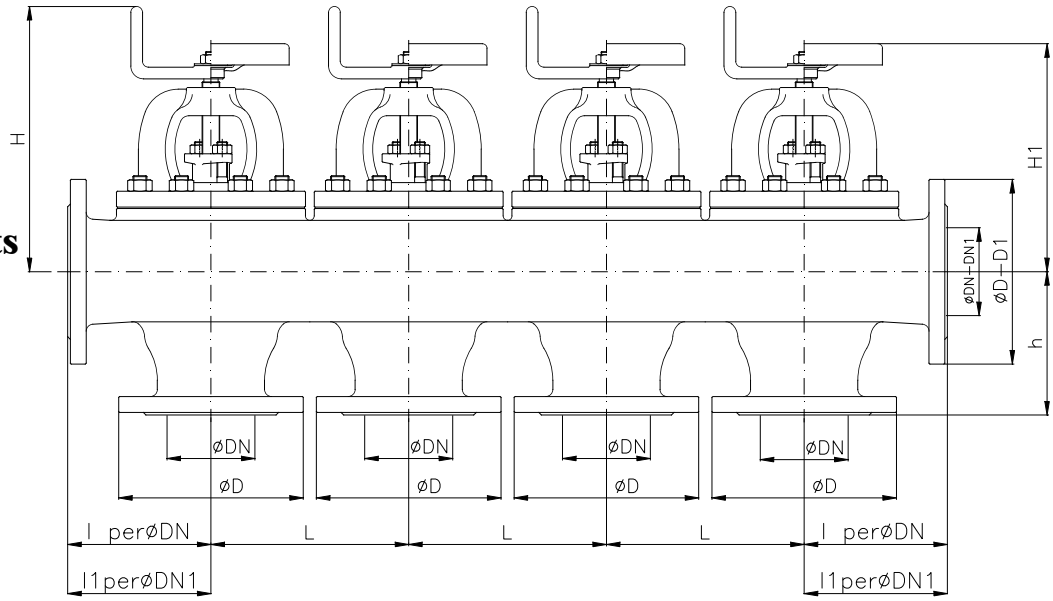

Casse valvole serie pesante PN6 - UNAV 8731-8732 tipo III

Distribution boxes suction type,heavy class NP6 - UNAV 8731-8732 type III

Tab.135-III

DN (ASPIRAZIONE) (SUCTION)	DN1 (MANDATA) (DELIVERY)	D	D1	H (APERTA) (OPEN)	H1 (APERTA) (OPEN)	h	L	l	l1	l3 (~)	Weight (Kg) 2 elements	Weight (Kg) 3 elements	Weight (Kg) 4 elements
40	40–50	130	140	240	210	100	145	95	100	80	26	36	48
50	50–65	140	160	250	220	105	145	100	105	90	28	38	51
65	65–80	160	190	300	260	130	195	115	125	100	40	60	79
80	80–100	190	210	305	270	140	195	130	150	125		78	98
100	100–125	210	240	340	305	160	225	150	160	140		110	145
125	125–150	240	265	380	350	180	255	175	185	160		154	
150	150–175	265	295	405	375	205	275	200	210	170			
175	175–200	295	320	460	435	235	315	225	235	195			
200	200–250	320	375	475	455	260	340	250	270	210			

Combinazione materiali standard – Standard materials Combination				
		B/B	B/316	G/316
ITEM	DENOMINAZIONE DENOMINATION	MATERIALE MATERIAL	MATERIALE MATERIAL	MATERIALE MATERIAL
01	Body	Bronze UNI EN1982 G-CuSn5Zn5Pb5	Bronze UNI EN1982 G-CuSn5Zn5Pb5	Cast iron UNI EN1561 EN-GJL-250
02	Bonnet	Bronze UNI EN1982 G-CuSn5Zn5Pb5	Bronze UNI EN1982 G-CuSn5Zn5Pb5	Cast iron UNI EN1561 EN-GJL-250
03	Body seat	Bronze UNI EN1982 G-CuSn5Zn5Pb5	Bronze UNI EN1982 G-CuSn5Zn5Pb5	Stainless steel AISI316 UNI EN10088
04	Disc (≤ DN80)	Bronze UNI EN1982 G-CuSn5Zn5Pb5	Stainless steel AISI316 UNI EN10088	Stainless steel AISI316 UNI EN10088
04	Disc (≥ DN100)	Bronze UNI EN1982 G-CuSn5Zn5Pb5	Stainless steel AISI316 UNI EN10088	Cast steel GP240-GH UNI EN10213 plus AISI316 facing welding
05	Stem	Brass CW617N (OT58)	Stainless steel AISI316 UNI EN10088	Stainless steel AISI316 UNI EN10088
06	Handwheel	Sheet of carbon steel	Sheet of carbon steel	Sheet of carbon steel
07	Handle	Steel A37 UNI EN10217-1	Steel A37 UNI EN10217-1	Steel A37 UNI EN10217-1
08	Gasket	Planiflex KG carbo/C PF81	Planiflex KG carbo/C PF81	Planiflex KG carbo/C PF81
09	Packing	Carbograph GR8800	Carbograph GR8800	Carbograph GR8800
10	Gland bushing	Brass CW509L (OT60)	Brass CW509L (OT60)	Bronze UNI EN1982 G-CuSn5Zn5Pb5
Nota: Combinazioni materiali non standard a richiesta Note: Non standard materials combinations on request				

Combinazione materiali standard – Standard materials Combination				
		G/B	GS/316	GS/B
ITEM	DENOMINAZIONE DENOMINATION	MATERIALE MATERIAL	MATERIALE MATERIAL	MATERIALE MATERIAL
01	Body	Cast iron UNI EN1561 EN-GJL-250	Nodular cast iron EN-GJS-400-15U UNI EN1563	Nodular cast iron EN-GJS-400-15U UNI EN1563
02	Bonnet	Cast iron UNI EN1561 EN-GJL-250	Nodular cast iron EN-GJS-400-15U UNI EN1563	Nodular cast iron EN-GJS-400-15U UNI EN1563
03	Body seat	Bronze UNI EN1982 G-CuSn5Zn5Pb5	Stainless steel AISI316 UNI EN10088	Bronze UNI EN1982 G-CuSn5Zn5Pb5
04	Disc (≤ DN80)	Bronze UNI EN1982 G-CuSn5Zn5Pb5	Stainless steel AISI316 UNI EN10088	Bronze UNI EN1982 G-CuSn5Zn5Pb5
04	Disc (≥ DN100)	Bronze UNI EN1982 G-CuSn5Zn5Pb5	Cast steel GP240-GH UNI EN10213 plus AISI316 facing welding	Bronze UNI EN1982 G-CuSn5Zn5Pb5
05	Stem	Brass CW617N (OT58)	Stainless steel AISI316 UNI EN10088	Brass CW617N (OT58)
06	Handwheel	Sheet of carbon steel	Sheet of carbon steel	Sheet of carbon steel
07	Handle	Steel A37 UNI EN10217-1	Steel A37 UNI EN10217-1	Steel A37 UNI EN10217-1
08	Gasket	Planiflex KG carbo/C PF81	Planiflex KG carbo/C PF81	Planiflex KG carbo/C PF81
09	Packing	Carbograph GR8800	Carbograph GR8800	Carbograph GR8800
10	Gland bushing	Bronze UNI EN1982 G-CuSn5Zn5Pb5	Bronze UNI EN1982 G-CuSn5Zn5Pb5	Bronze UNI EN1982 G-CuSn5Zn5Pb5
Nota: Combinazioni materiali non standard a richiesta Note: Non standard materials combinations on request				

2 Elements

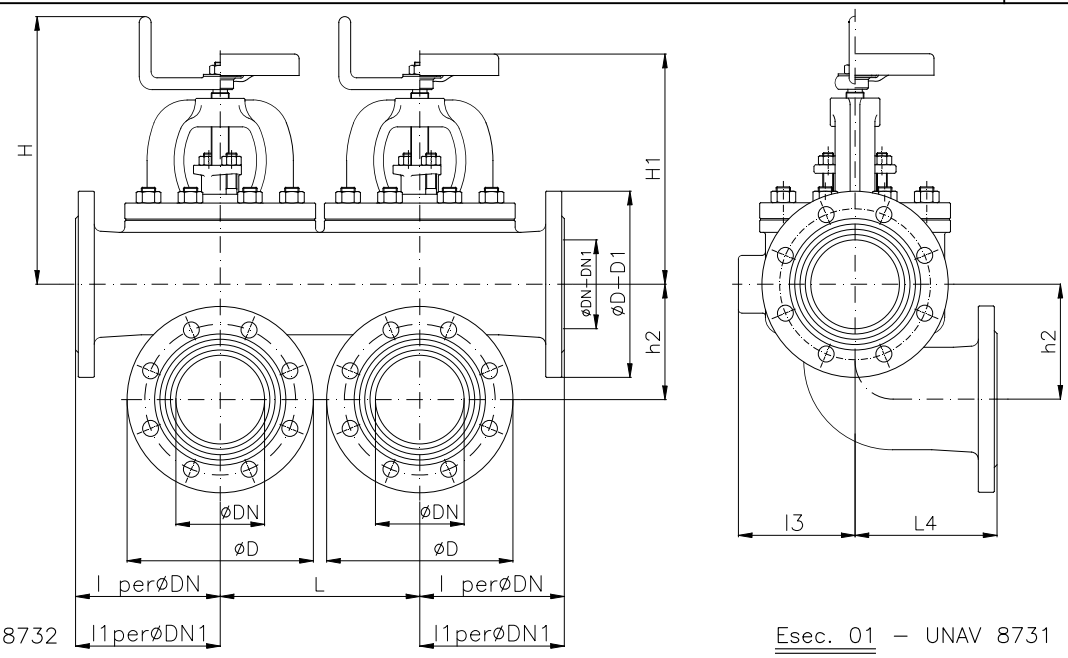

Esec. 02 – UNAV 8732
Semiautomatica con manovella
With loose disc and handle (SDNR)

Esec. 01 – UNAV 8731
Comandata con volantino
With fixed disc and handwheel (SDSL)

3 Elements

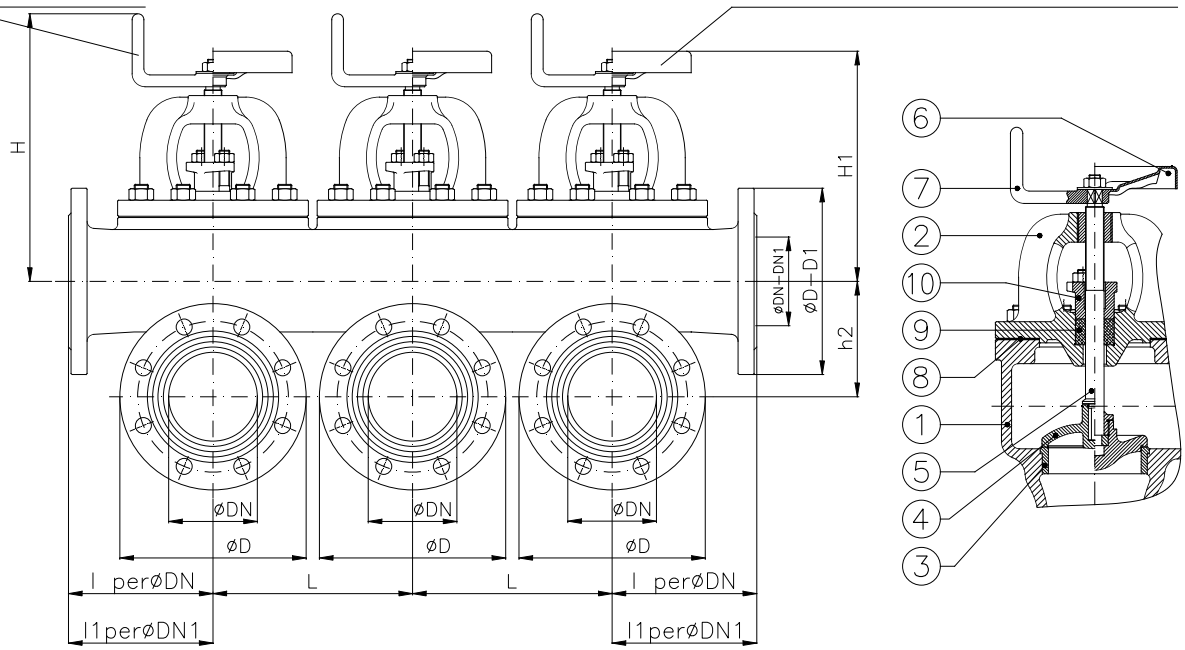

4 Elements

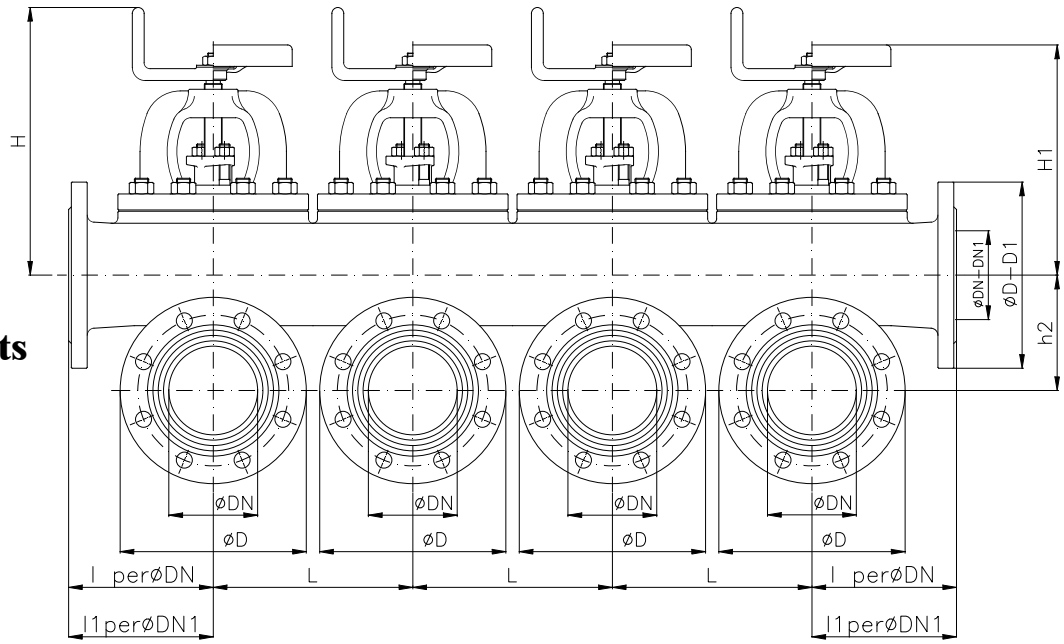

Casse valvole serie pesante PN6 - UNAV 8731-8732 tipo IV

Distribution boxes suction type,heavy class NP6 - UNAV 8731-8732 type IV

Tab.135-IV

DN (ASPIRAZIONE) (SUCTION)	DN1 (MANDATA) (DELIVERY)	D	D1	H (APERTA) (OPEN)	H1 (APERTA) (OPEN)	h2	L	L4	l	l1	l3 (~)	Weight (Kg) 2 elements	Weight (Kg) 3 elements	Weight (Kg) 4 elements
40	40–50	130	140	240	210	70	145	95	95	100	80	25		
50	50–65	140	160	250	220	80	145	110	100	105	90	28	42	51
65	65–80	160	190	300	260	100	195	125	115	125	100	42	63	82
80	80–100	190	210	305	270	110	195	150	130	150	125	54		
100	100–125	210	240	340	305	130	225	160	150	160	140	94		
125	125–150	240	265	380	350	155	255	180	175	185	160	117		
150	150–175	265	295	405	375	180	275	195	200	210	170			
175	175–200	295	320	460	435	210	315	220	225	235	195	200		
200	200–250	320	375	475	455	230	340	235	250	270	210			

Combinazione materiali standard – Standard materials Combination				
		B/B	B/316	G/316
ITEM	DENOMINAZIONE DENOMINATION	MATERIALE MATERIAL	MATERIALE MATERIAL	MATERIALE MATERIAL
01	Body	Bronze UNI EN1982 G–CuSn5Zn5Pb5	Bronze UNI EN1982 G–CuSn5Zn5Pb5	Cast iron UNI EN1561 EN–GJL–250
02	Bonnet	Bronze UNI EN1982 G–CuSn5Zn5Pb5	Bronze UNI EN1982 G–CuSn5Zn5Pb5	Cast iron UNI EN1561 EN–GJL–250
03	Body seat	Bronze UNI EN1982 G–CuSn5Zn5Pb5	Bronze UNI EN1982 G–CuSn5Zn5Pb5	Stainless steel AISI316 UNI EN10088
04	Disc (≤ DN80)	Bronze UNI EN1982 G–CuSn5Zn5Pb5	Stainless steel AISI316 UNI EN10088	Stainless steel AISI316 UNI EN10088
04	Disc (≥ DN100)	Bronze UNI EN1982 G–CuSn5Zn5Pb5	Stainless steel AISI316 UNI EN10088	Cast steel GP240–GH UNI EN10213 plus AISI316 facing welding
05	Stem	Brass CW617N (OT58)	Stainless steel AISI316 UNI EN10088	Stainless steel AISI316 UNI EN10088
06	Handwheel	Sheet of carbon steel	Sheet of carbon steel	Sheet of carbon steel
07	Handle	Steel A37 UNI EN10217–1	Steel A37 UNI EN10217–1	Steel A37 UNI EN10217–1
08	Gasket	Planiflex KG carbo/C PF81	Planiflex KG carbo/C PF81	Planiflex KG carbo/C PF81
09	Packing	Carbograph GR8800	Carbograph GR8800	Carbograph GR8800
10	Gland bushing	Brass CW509L (OT60)	Brass CW509L (OT60)	Bronze UNI EN1982 G–CuSn5Zn5Pb5

Nota: Combinazioni materiali non standard a richiesta
Note: Non standard materials combinations on request

Combinazione materiali standard – Standard materials Combination				
		G/B	GS/316	GS/B
ITEM	DENOMINAZIONE DENOMINATION	MATERIALE MATERIAL	MATERIALE MATERIAL	MATERIALE MATERIAL
01	Body	Cast iron UNI EN1561 EN–GJL–250	Nodular cast iron EN–GJS–400–15U UNI EN1563	Nodular cast iron EN–GJS–400–15U UNI EN1563
02	Bonnet	Cast iron UNI EN1561 EN–GJL–250	Nodular cast iron EN–GJS–400–15U UNI EN1563	Nodular cast iron EN–GJS–400–15U UNI EN1563
03	Body seat	Bronze UNI EN1982 G–CuSn5Zn5Pb5	Stainless steel AISI316 UNI EN10088	Bronze UNI EN1982 G–CuSn5Zn5Pb5
04	Disc (≤ DN80)	Bronze UNI EN1982 G–CuSn5Zn5Pb5	Stainless steel AISI316 UNI EN10088	Bronze UNI EN1982 G–CuSn5Zn5Pb5
04	Disc (≥ DN100)	Bronze UNI EN1982 G–CuSn5Zn5Pb5	Cast steel GP240–GH UNI EN10213 plus AISI316 facing welding	Bronze UNI EN1982 G–CuSn5Zn5Pb5
05	Stem	Brass CW617N (OT58)	Stainless steel AISI316 UNI EN10088	Brass CW617N (OT58)
06	Handwheel	Sheet of carbon steel	Sheet of carbon steel	Sheet of carbon steel
07	Handle	Steel A37 UNI EN10217–1	Steel A37 UNI EN10217–1	Steel A37 UNI EN10217–1
08	Gasket	Planiflex KG carbo/C PF81	Planiflex KG carbo/C PF81	Planiflex KG carbo/C PF81
09	Packing	Carbograph GR8800	Carbograph GR8800	Carbograph GR8800
10	Gland bushing	Bronze UNI EN1982 G–CuSn5Zn5Pb5	Bronze UNI EN1982 G–CuSn5Zn5Pb5	Bronze UNI EN1982 G–CuSn5Zn5Pb5

Nota: Combinazioni materiali non standard a richiesta
Note: Non standard materials combinations on request

2 Elements

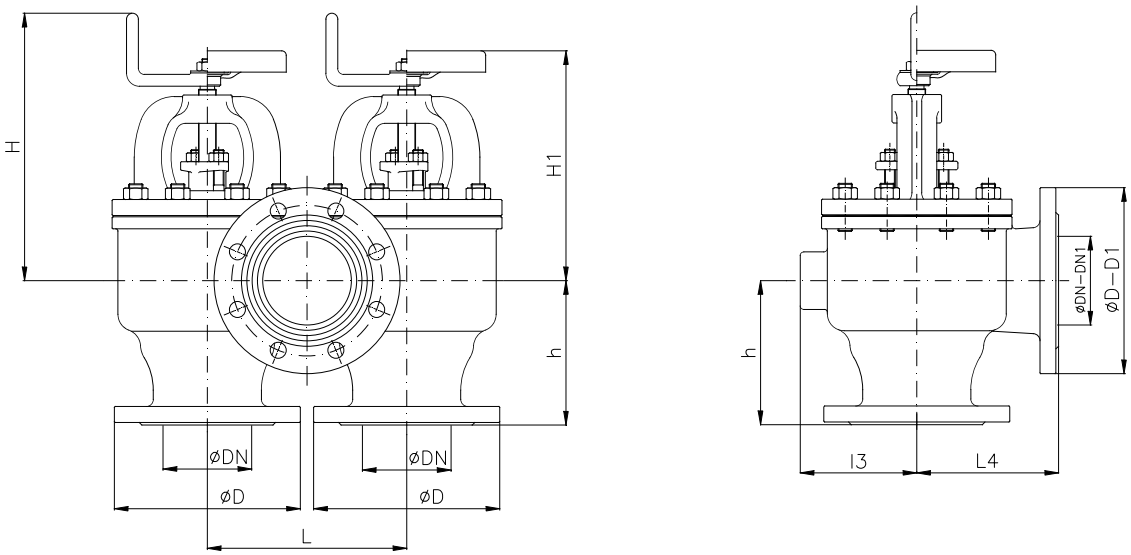

3 Elements

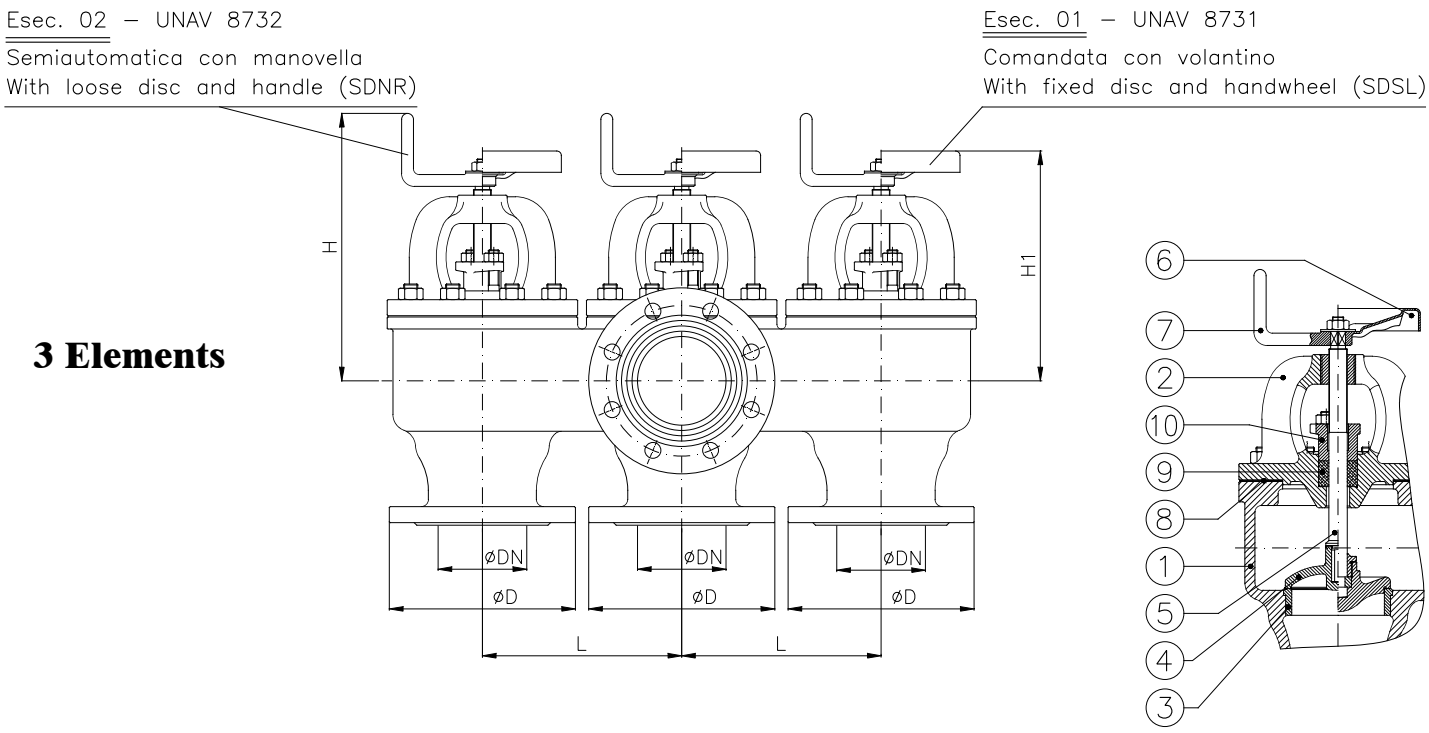

4 Elements

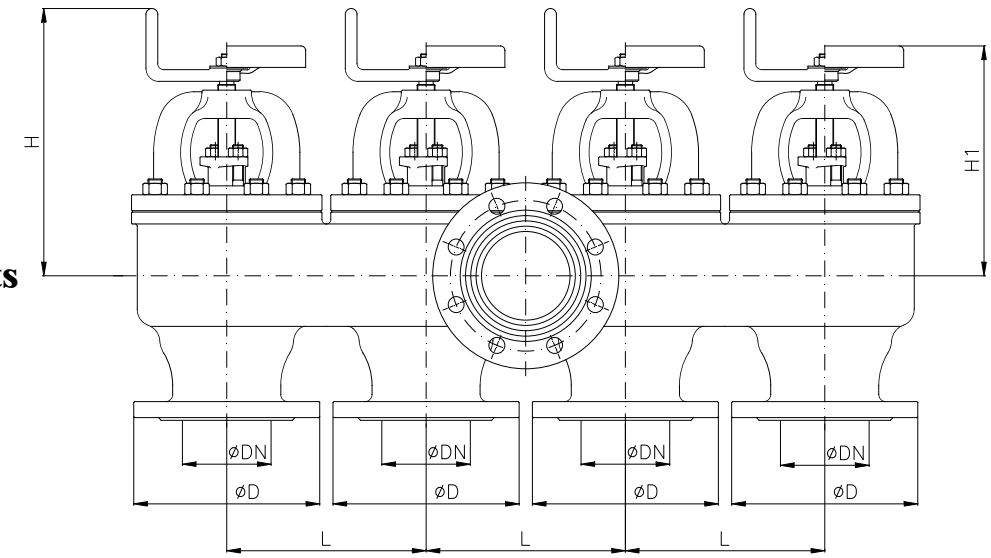

Casse valvole serie pesante PN6 - UNAV 8731-8732 tipo V

Distribution boxes suction type,heavy class NP6 - UNAV 8731-8732 type V

Tab.135-V

DN (ASPIRAZIONE) (SUCTION)	DN1 (MANDATA) (DELIVERY)	D	D1	H (APERTA) (OPEN)	H1 (APERTA) (OPEN)	h	L	L4	l3 (~)	Weight (Kg) 2 elements	Weight (Kg) 3 elements	Weight (Kg) 4 elements
40	40–50	130	140	240	210	100	145	95	80	22	31	
50	50–65	140	160	250	220	105	145	110	90	26	35	46
65	65–80	160	190	300	260	130	195	125	100	38	54	72
80	80–100	190	210	305	270	140	195	150	125	47	75	99
100	100–125	210	240	340	305	160	225	160	140	70	105	123
125	125–150	240	265	380	350	180	255	180	160	101	143	
150	150–175	265	295	405	375	205	275	195	170	118	176	
175	175–200	295	320	460	435	235	315	220	195	160	235	
200	200–250	320	375	475	455	260	340	235	210			

Combinazione materiali standard – Standard materials Combination

		B/B	B/316	G/316
ITEM	DENOMINAZIONE DENOMINATION	MATERIALE MATERIAL	MATERIALE MATERIAL	MATERIALE MATERIAL
01	Body	Bronze UNI EN1982 G-CuSn5Zn5Pb5	Bronze UNI EN1982 G-CuSn5Zn5Pb5	Cast iron UNI EN1561 EN-GJL-250
02	Bonnet	Bronze UNI EN1982 G-CuSn5Zn5Pb5	Bronze UNI EN1982 G-CuSn5Zn5Pb5	Cast iron UNI EN1561 EN-GJL-250
03	Body seat	Bronze UNI EN1982 G-CuSn5Zn5Pb5	Bronze UNI EN1982 G-CuSn5Zn5Pb5	Stainless steel AISI316 UNI EN10088
04	Disc (≤ DN80)	Bronze UNI EN1982 G-CuSn5Zn5Pb5	Stainless steel AISI316 UNI EN10088	Stainless steel AISI316 UNI EN10088
04	Disc (≥ DN100)	Bronze UNI EN1982 G-CuSn5Zn5Pb5	Stainless steel AISI316 UNI EN10088	Cast steel GP240-GH UNI EN10213 plus AISI316 facing welding
05	Stem	Brass CW617N (OT58)	Stainless steel AISI316 UNI EN10088	Stainless steel AISI316 UNI EN10088
06	Handwheel	Sheet of carbon steel	Sheet of carbon steel	Sheet of carbon steel
07	Handle	Steel A37 UNI EN10217-1	Steel A37 UNI EN10217-1	Steel A37 UNI EN10217-1
08	Gasket	Planiflex KG carbo/C PF81	Planiflex KG carbo/C PF81	Planiflex KG carbo/C PF81
09	Packing	Carbograph GR8800	Carbograph GR8800	Carbograph GR8800
10	Gland bushing	Brass CW509L (OT60)	Brass CW509L (OT60)	Bronze UNI EN1982 G-CuSn5Zn5Pb5

Nota: Combinazioni materiali non standard a richiesta
Note: Non standard materials combinations on request

Combinazione materiali standard – Standard materials Combination

		G/B	GS/316	GS/B
ITEM	DENOMINAZIONE DENOMINATION	MATERIALE MATERIAL	MATERIALE MATERIAL	MATERIALE MATERIAL
01	Body	Cast iron UNI EN1561 EN-GJL-250	Nodular cast iron EN-GJS-400-15U UNI EN1563	Nodular cast iron EN-GJS-400-15U UNI EN1563
02	Bonnet	Cast iron UNI EN1561 EN-GJL-250	Nodular cast iron EN-GJS-400-15U UNI EN1563	Nodular cast iron EN-GJS-400-15U UNI EN1563
03	Body seat	Bronze UNI EN1982 G-CuSn5Zn5Pb5	Stainless steel AISI316 UNI EN10088	Bronze UNI EN1982 G-CuSn5Zn5Pb5
04	Disc (≤ DN80)	Bronze UNI EN1982 G-CuSn5Zn5Pb5	Stainless steel AISI316 UNI EN10088	Bronze UNI EN1982 G-CuSn5Zn5Pb5
04	Disc (≥ DN100)	Bronze UNI EN1982 G-CuSn5Zn5Pb5	Cast steel GP240-GH UNI EN10213 plus AISI316 facing welding	Bronze UNI EN1982 G-CuSn5Zn5Pb5
05	Stem	Brass CW617N (OT58)	Stainless steel AISI316 UNI EN10088	Brass CW617N (OT58)
06	Handwheel	Sheet of carbon steel	Sheet of carbon steel	Sheet of carbon steel
07	Handle	Steel A37 UNI EN10217-1	Steel A37 UNI EN10217-1	Steel A37 UNI EN10217-1
08	Gasket	Planiflex KG carbo/C PF81	Planiflex KG carbo/C PF81	Planiflex KG carbo/C PF81
09	Packing	Carbograph GR8800	Carbograph GR8800	Carbograph GR8800
10	Gland bushing	Bronze UNI EN1982 G-CuSn5Zn5Pb5	Bronze UNI EN1982 G-CuSn5Zn5Pb5	Bronze UNI EN1982 G-CuSn5Zn5Pb5

Nota: Combinazioni materiali non standard a richiesta
Note: Non standard materials combinations on request

TYPE I

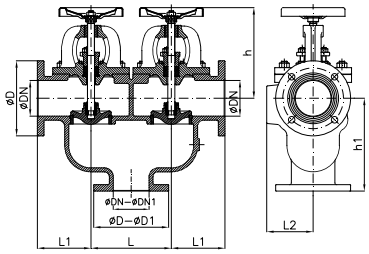

2 Elements

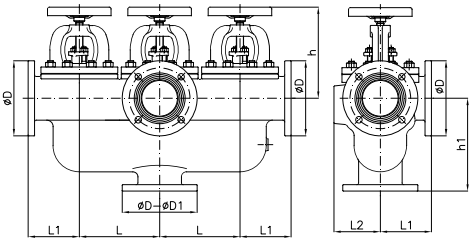

3 Elements

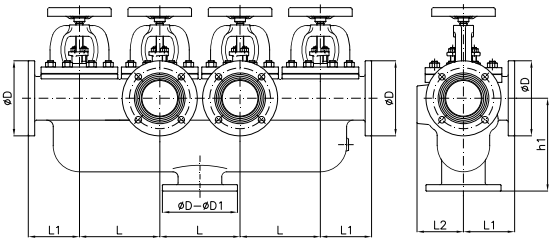

4 Elements

TYPE II

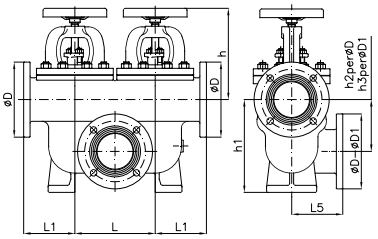

2 Elements

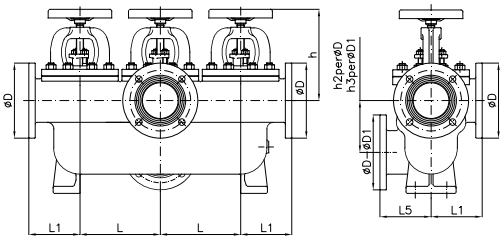

3 Elements

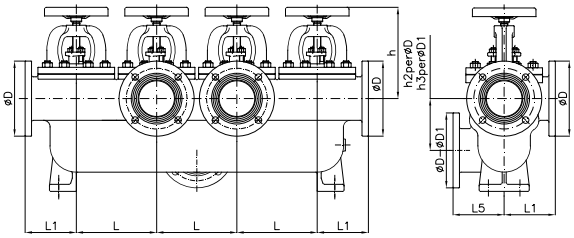

4 Elements

TYPE III

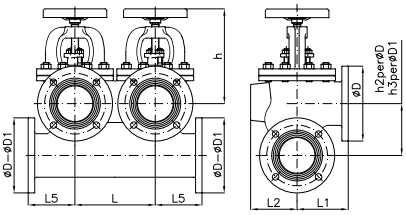

2 Elements

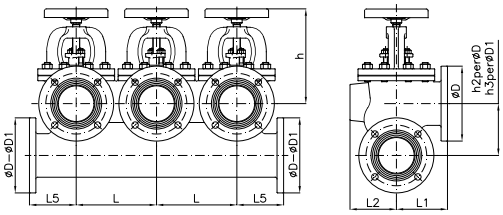

3 Elements

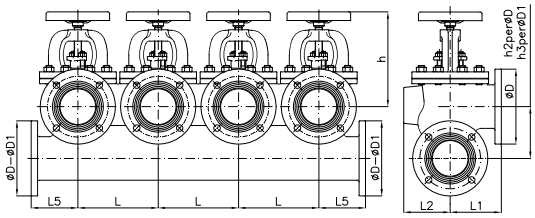

4 Elements

TYPE IV

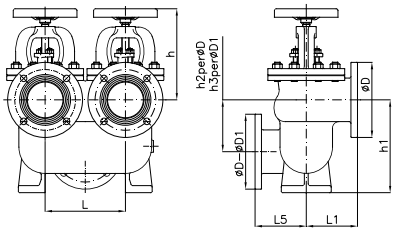

2 Elements

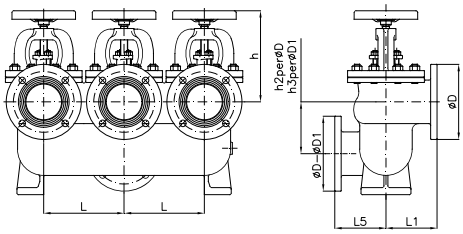

3 Elements

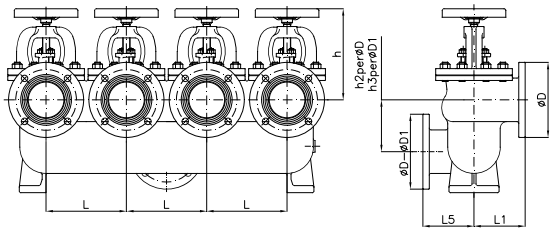

4 Elements

Casse valvole serie pesante PN6 - UNAV 8733
Distribution boxes suction type,heavy class NP6 - UNAV 8733

Tab.135A

DN (MANDATA) (DELIVERY)	DN1 (ASPIRAZIONE) (SUCTION)	D	D1	h (APERTA) (OPEN)	h1	h2	h3	L	L1	L2	L5	Weight (Kg) 2 elements	Weight (Kg) 3 elements	Weight (Kg) 4 elements
40	40–50	130	140	215	145	75	70	145	95	75	90	25	34	
50	50–65	140	160	220	170	90	82.5	145	100	85	100	29	49	
65	65–80	160	190	265	200	105	97.5	195	120	100	120	47	69	88
80	80–100	190	210	275	225	120	110	195	130	115	135	56	78	
100	100–125	210	240	310	260	145	132.5	225	150	130	150	82	130	
125	125–175	240	295	355	330	200	175	255	175	155	175			
150	150–200	265	320	380	370	225	200	275	200	170	190	164	228	
175	175–250	295	375	440	445	280	242.5	315	230	190	210	214	345	
200	200–300	320	440	460	510	325	275	340	250	225	225			

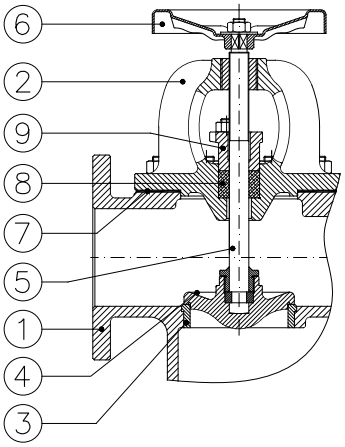

Combinazione materiali standard – Standard materials Combination				
		B/B	B/316	G/316
ITEM	DENOMINAZIONE DENOMINATION	MATERIALE MATERIAL	MATERIALE MATERIAL	MATERIALE MATERIAL
01	Body	Bronze UNI EN1982 G-CuSn5Zn5Pb5	Bronze UNI EN1982 G-CuSn5Zn5Pb5	Cast iron UNI EN1561 EN-GJL-250
02	Bonnet	Bronze UNI EN1982 G-CuSn5Zn5Pb5	Bronze UNI EN1982 G-CuSn5Zn5Pb5	Cast iron UNI EN1561 EN-GJL-250
03	Body seat	Bronze UNI EN1982 G-CuSn5Zn5Pb5	Bronze UNI EN1982 G-CuSn5Zn5Pb5	Stainless steel AISI316 UNI EN10088
04	Disc (≤ DN80)	Bronze UNI EN1982 G-CuSn5Zn5Pb5	Stainless steel AISI316 UNI EN10088	Stainless steel AISI316 UNI EN10088
04	Disc (≥ DN100)	Bronze UNI EN1982 G-CuSn5Zn5Pb5	Stainless steel AISI316 UNI EN10088	Cast steel GP240-GH UNI EN10213 plus AISI316 facing welding
05	Stem	Brass CW617N (OT58)	Stainless steel AISI316 UNI EN10088	Stainless steel AISI316 UNI EN10088
06	Handwheel	Sheet of carbon steel	Sheet of carbon steel	Sheet of carbon steel
07	Gasket	Planiflex KG carbo/C PF81	Planiflex KG carbo/C PF81	Planiflex KG carbo/C PF81
08	Packing	Carbograph GR8800	Carbograph GR8800	Carbograph GR8800
09	Gland bushing	Brass CW509L (OT60)	Brass CW509L (OT60)	Bronze UNI EN1982 G-CuSn5Zn5Pb5

Nota: Combinazioni materiali non standard a richiesta
Note: Non standard materials combinations on request

Combinazione materiali standard – Standard materials Combination				
		G/B	GS/316	GS/B
ITEM	DENOMINAZIONE DENOMINATION	MATERIALE MATERIAL	MATERIALE MATERIAL	MATERIALE MATERIAL
01	Body	Cast iron UNI EN1561 EN-GJL-250	Nodular cast iron EN-GJS-400-15U UNI EN1563	Nodular cast iron EN-GJS-400-15U UNI EN1563
02	Bonnet	Cast iron UNI EN1561 EN-GJL-250	Nodular cast iron EN-GJS-400-15U UNI EN1563	Nodular cast iron EN-GJS-400-15U UNI EN1563
03	Body seat	Bronze UNI EN1982 G-CuSn5Zn5Pb5	Stainless steel AISI316 UNI EN10088	Bronze UNI EN1982 G-CuSn5Zn5Pb5
04	Disc (≤ DN80)	Bronze UNI EN1982 G-CuSn5Zn5Pb5	Stainless steel AISI316 UNI EN10088	Bronze UNI EN1982 G-CuSn5Zn5Pb5
04	Disc (≥ DN100)	Bronze UNI EN1982 G-CuSn5Zn5Pb5	Cast steel GP240-GH UNI EN10213 plus AISI316 facing welding	Bronze UNI EN1982 G-CuSn5Zn5Pb5
05	Stem	Brass CW617N (OT58)	Stainless steel AISI316 UNI EN10088	Brass CW617N (OT58)
06	Handwheel	Sheet of carbon steel	Sheet of carbon steel	Sheet of carbon steel
07	Gasket	Planiflex KG carbo/C PF81	Planiflex KG carbo/C PF81	Planiflex KG carbo/C PF81
08	Packing	Carbograph GR8800	Carbograph GR8800	Carbograph GR8800
09	Gland bushing	Bronze UNI EN1982 G-CuSn5Zn5Pb5	Bronze UNI EN1982 G-CuSn5Zn5Pb5	Bronze UNI EN1982 G-CuSn5Zn5Pb5

Nota: Combinazioni materiali non standard a richiesta
Note: Non standard materials combinations on request

4 elements

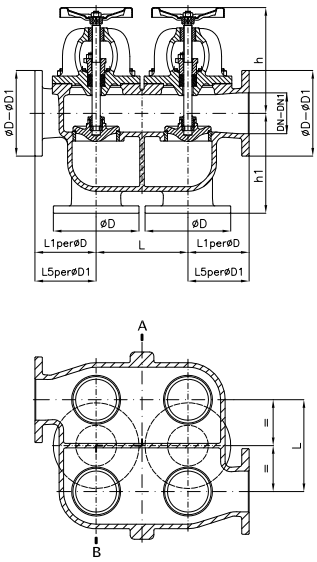

Sezione A−B
Sectional view A−B

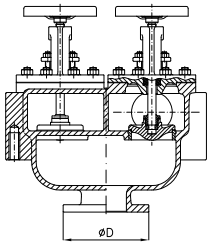

TYPE I

TYPE II

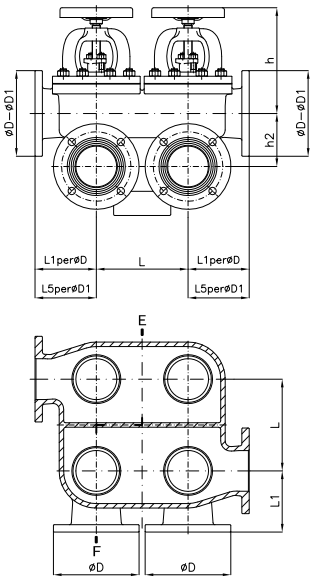

Sezione E−F
Sectional view E−F

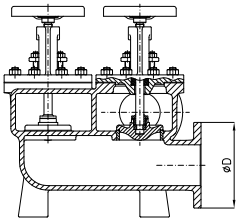

6 elements

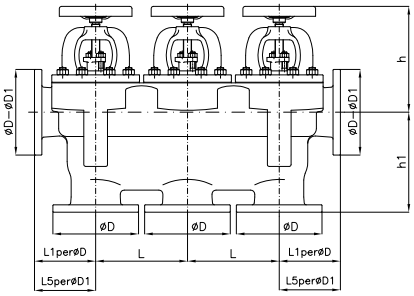

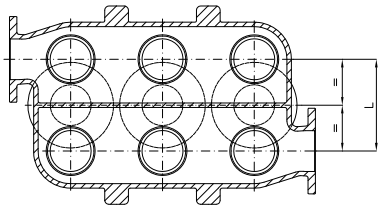

TYPE I

TYPE II

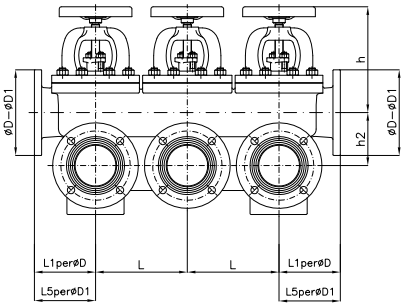

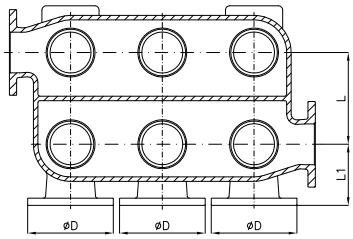

8 elements

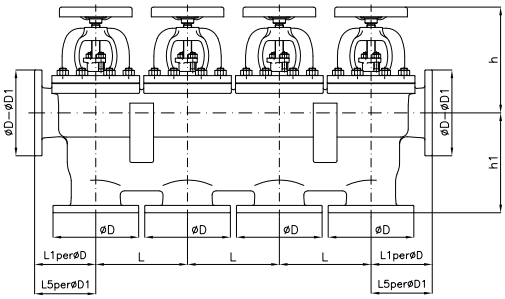

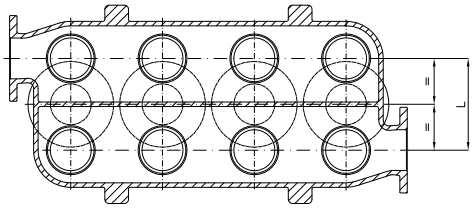

TYPE I

TYPE II

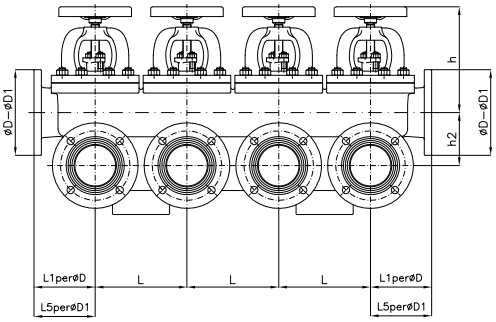

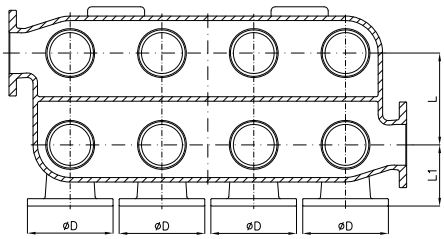

Casse valvole serie pesante PN6 - UNAV 8737
Distribution boxes combined type,heavy class NP6 - UNAV 8737

Tab.135B

DN (ASPIRAZIONE) (SUCTION)	DN1 (MANDATA) (DELIVERY)	D	D1	h (APERTA) (OPEN)	h1	h2	L	L1	L5	Weight (Kg) 4 elements	Weight (Kg) 6 elements	Weight (Kg) 8 elements
40	40–50	130	140	205	140	70	145	95	100	59	82	104
50	50–65	140	160	230	165	80	180	100	105	75	119	145
65	65–80	160	190	275	185	97.5	195	115	125	99	154	186
80	80–100	190	210	285	210	110	195	130	145	117	179	210
100	100–125	210	240	320	245	130	225	150	160	182	290	357
125	125–150	240	265	375	280	152.5	255	175	185		314	406
150	150–175	265	295	410	320	180	275	200	210	288		
175	175–200	295	320	465	370	212.5	315	225	235			
200	200–250	320	375	520	405	230	340	250	270			

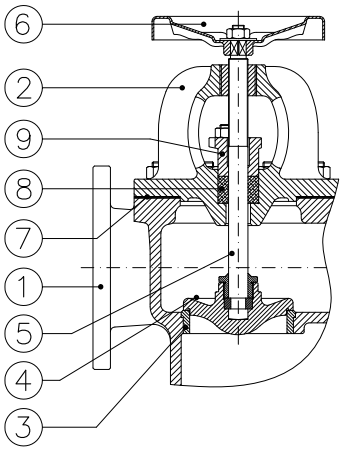

Combinazione materiali standard – Standard materials Combination				
		B/B	B/316	G/316
ITEM	DENOMINAZIONE DENOMINATION	MATERIALE MATERIAL	MATERIALE MATERIAL	MATERIALE MATERIAL
01	Body	Bronze UNI EN1982 G–CuSn5Zn5Pb5	Bronze UNI EN1982 G–CuSn5Zn5Pb5	Cast iron UNI EN1561 EN–GJL–250
02	Bonnet	Bronze UNI EN1982 G–CuSn5Zn5Pb5	Bronze UNI EN1982 G–CuSn5Zn5Pb5	Cast iron UNI EN1561 EN–GJL–250
03	Body seat	Bronze UNI EN1982 G–CuSn5Zn5Pb5	Bronze UNI EN1982 G–CuSn5Zn5Pb5	Stainless steel AISI316 UNI EN10088
04	Disc (≤ DN80)	Bronze UNI EN1982 G–CuSn5Zn5Pb5	Stainless steel AISI316 UNI EN10088	Stainless steel AISI316 UNI EN10088
04	Disc (≥ DN100)	Bronze UNI EN1982 G–CuSn5Zn5Pb5	Stainless steel AISI316 UNI EN10088	Cast steel GP240–GH UNI EN10213 plus AISI316 facing welding
05	Stem	Brass CW617N (OT58)	Stainless steel AISI316 UNI EN10088	Stainless steel AISI316 UNI EN10088
06	Handwheel	Sheet of carbon steel	Sheet of carbon steel	Sheet of carbon steel
07	Gasket	Planiflex KG carbo/C PF81	Planiflex KG carbo/C PF81	Planiflex KG carbo/C PF81
08	Packing	Carbograph GR8800	Carbograph GR8800	Carbograph GR8800
09	Gland bushing	Brass CW509L (OT60)	Brass CW509L (OT60)	Bronze UNI EN1982 G–CuSn5Zn5Pb5

Nota: Combinazioni materiali non standard a richiesta
Note: Non standard materials combinations on request

Combinazione materiali standard – Standard materials Combination				
		G/B	GS/316	GS/B
ITEM	DENOMINAZIONE DENOMINATION	MATERIALE MATERIAL	MATERIALE MATERIAL	MATERIALE MATERIAL
01	Body	Cast iron UNI EN1561 EN-GJL-250	Nodular cast iron EN-GJS-400-15U UNI EN1563	Nodular cast iron EN-GJS-400-15U UNI EN1563
02	Bonnet	Cast iron UNI EN1561 EN-GJL-250	Nodular cast iron EN-GJS-400-15U UNI EN1563	Nodular cast iron EN-GJS-400-15U UNI EN1563
03	Body seat	Bronze UNI EN1982 G–CuSn5Zn5Pb5	Stainless steel AISI316 UNI EN10088	Bronze UNI EN1982 G–CuSn5Zn5Pb5
04	Disc (≤ DN80)	Bronze UNI EN1982 G–CuSn5Zn5Pb5	Stainless steel AISI316 UNI EN10088	Bronze UNI EN1982 G–CuSn5Zn5Pb5
04	Disc (≥ DN100)	Bronze UNI EN1982 G–CuSn5Zn5Pb5	Cast steel GP240–GH UNI EN10213 plus AISI316 facing welding	Bronze UNI EN1982 G–CuSn5Zn5Pb5
05	Stem	Brass CW617N (OT58)	Stainless steel AISI316 UNI EN10088	Brass CW617N (OT58)
06	Handwheel	Sheet of carbon steel	Sheet of carbon steel	Sheet of carbon steel
07	Gasket	Planiflex KG carbo/C PF81	Planiflex KG carbo/C PF81	Planiflex KG carbo/C PF81
08	Packing	Carbograph GR8800	Carbograph GR8800	Carbograph GR8800
09	Gland bushing	Bronze UNI EN1982 G–CuSn5Zn5Pb5	Bronze UNI EN1982 G–CuSn5Zn5Pb5	Bronze UNI EN1982 G–CuSn5Zn5Pb5

Nota: Combinazioni materiali non standard a richiesta
Note: Non standard materials combinations on request

Spie di controllo a flangia a 2 cristalli PN6-16-10DIN-ANSI150

Sight glasses, double window NP6-16-10DIN-ANSI150

Tab.171

Conform to:

UNI EN1092
ANSI B16.5
NE585640
NM764413

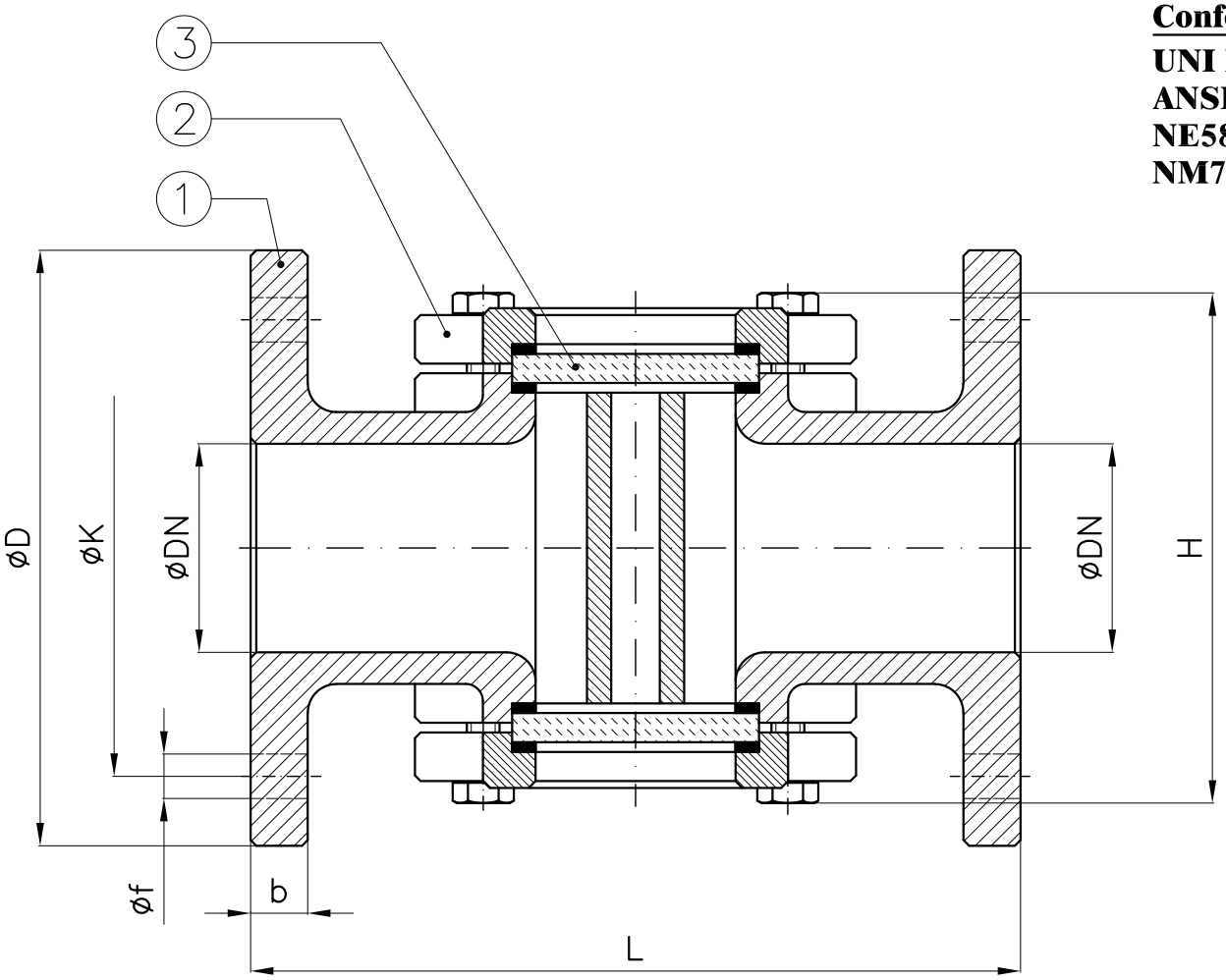

	Ghisa–Cast iron Acciaio–Cast steel Acciaio inox–Stainless steel				Bronzo–Bronze				PN6				PN16				PN10DIN				ANSI150			
DN	L	H (~)	b	Weight (Kg)	L	H (~)	b	Weight (Kg)	D	K	f	Holes No. f	D	K	f	Holes No. f	D	K	f	Holes No. f	D	K	f	Holes No. f
15	135	105	13	3	110	85	11	2.5	80	55	11	4	95	65	14	4	95	65	14	4	88.9	60	16	4
20	150	106	16	4	120	92	11	2.8	90	65	11	4	105	75	14	4	105	75	14	4	98.4	70	16	4
25	160	110	16	5	135	92	11	3	100	75	11	4	115	85	14	4	115	85	14	4	108	79	16	4
32	180	132	16.5	6.5	150	111	12	4.8	120	90	14	4	140	100	18	4	140	100	18	4	118	89	16	4
40	200	140	16.5	7.3	180	119	13	5.7	130	100	14	4	150	110	18	4	150	110	18	4	127	98	16	4
50	230	150	17	10.5	200	142	13	9	140	110	14	4	165	125	18	4	165	125	18	4	152	121	19	4
65	290	190	19	17	240	163	14	12.3	160	130	14	4	185	145	18	4	185	145	18	4	178	140	19	4
80	310	210	20	20	260	201	15	16	190	150	18	4	200	160	18	8	200	160	18	8	190	152	19	4
100	350	245	23	26.5	300	216	17	22	210	170	18	4	220	180	18	8	220	180	18	8	216	178	19	8
125	400	315	24	52	–	–	–	–	240	200	18	8	250	210	18	8	250	210	18	8	229	191	19	8
150	480	340	26	68	–	–	–	–	265	225	18	8	285	240	22	8	285	240	22	8	254	216	22	8
175	550		28	92	–	–	–	–	295	255	18	8	315	270	22	8	315	270	22	8	279	241	22	8
200	600	415	30	125	–	–	–	–	320	280	18	8	340	295	22	12	340	295	22	8	343	298	22	8
250	730	450	30	165	–	–	–	–	375	335	18	12	405	355	26	12	395	350	22	12	406	362	25	12

Combinazione materiali standard – Standard materials Combination					
		G	A	316	B
ITEM	DENOMINAZIONE DENOMINATION	MATERIALE MATERIAL	MATERIALE MATERIAL	MATERIALE MATERIAL	MATERIALE MATERIAL
01	Body	Cast iron UNI EN1561 EN–GJL–250	Cast steel GP240–GH UNI EN10213	Stainless steel AISI316 UNI EN10088	Bronze UNI EN1982 G–CuSn5Zn5Pb5
02	Ring nut	Cast iron UNI EN1561 EN–GJL–250	Cast steel GP240–GH UNI EN10213	Stainless steel AISI316 UNI EN10088	Bronze UNI EN1982 G–CuSn5Zn5Pb5
03	Window	Tempered or borosilicate glass	Tempered or borosilicate glass	Tempered or borosilicate glass	Tempered or borosilicate glass

Nota: Combinazioni materiali non standard a richiesta
Note: Non standard materials combinations on request

Spie a semplice cristallo temperato con alette fisse serie PN16
Sight glasses single window NP16

Art.36

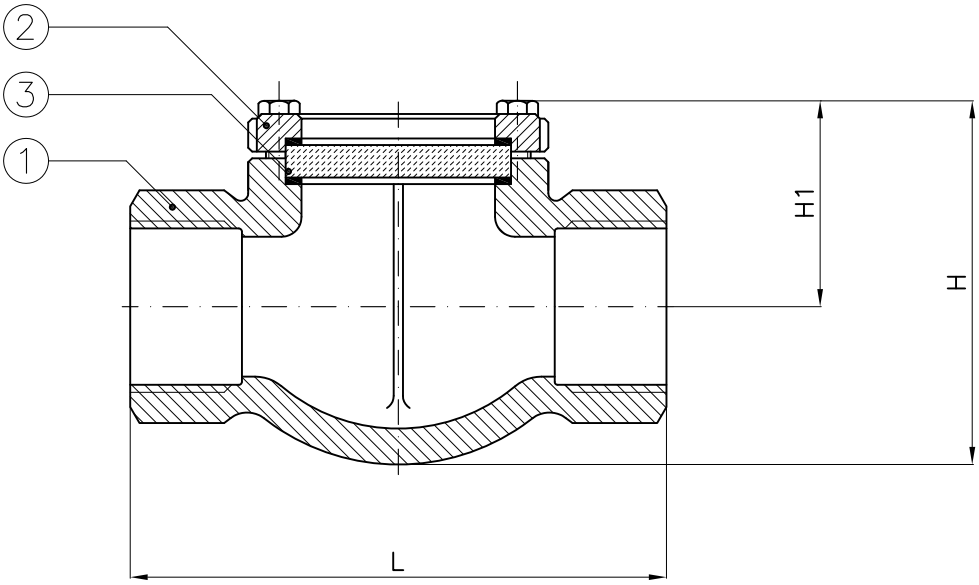

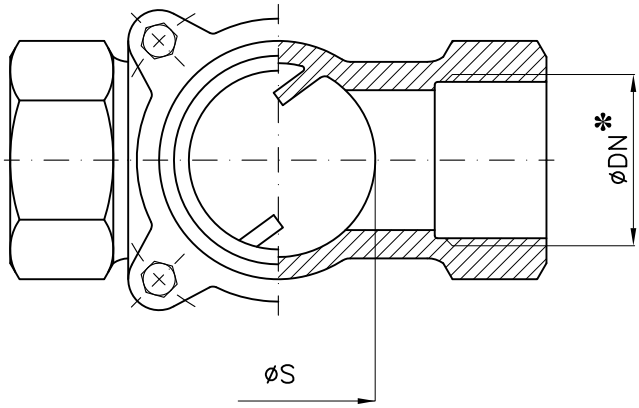

*: Filettatura GAS
*: *BSPP threaded*

DN	H	H1	L	S	Weight (Kg)
3/8"	63	40	107	39	0.76
1/2"	63	40	95	39	0.75
3/4"	71	44	100	44	0.9
1"	74	46	107	44	0.98
1"1/4	85	57	128	50	1.7
1"1/2	93	60	137	50	2
2"	112	72	162	63	3.4
2"1/2	120	80	180	82	5

Combinazione materiali standard – Standard materials Combination		
		B/GLASS
ITEM	DENOMINAZIONE DENOMINATION	MATERIALE MATERIAL
01	Body	Bronze UNI EN1982 G-CuSn5Zn5Pb5
02	Ring nut	Bronze UNI EN1982 G-CuSn5Zn5Pb5
03	Window	Tempered or borosilicate glass

Nota: Combinazioni materiali non standard a richiesta
Note: Non standard materials combinations on request

Spie a doppio cristallo temperato con alette fisse serie PN16
Sight glasses double window NP16

Art.37

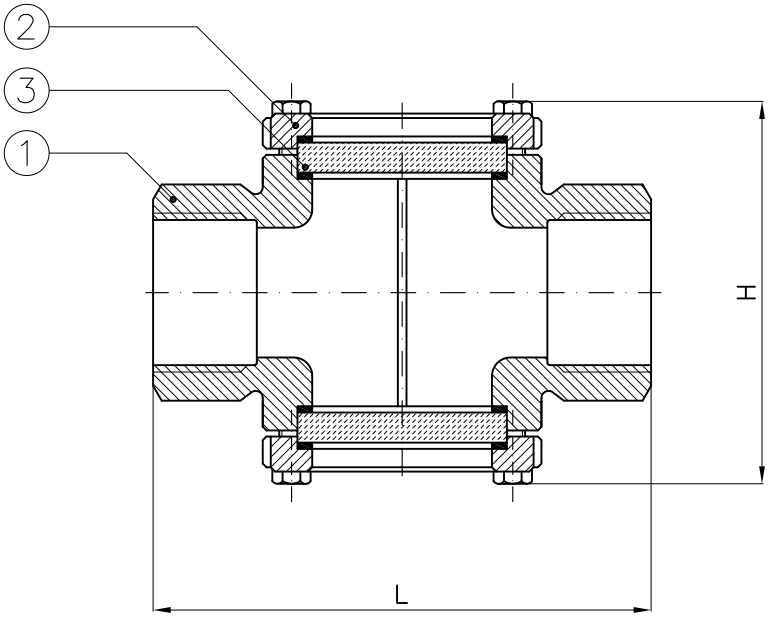

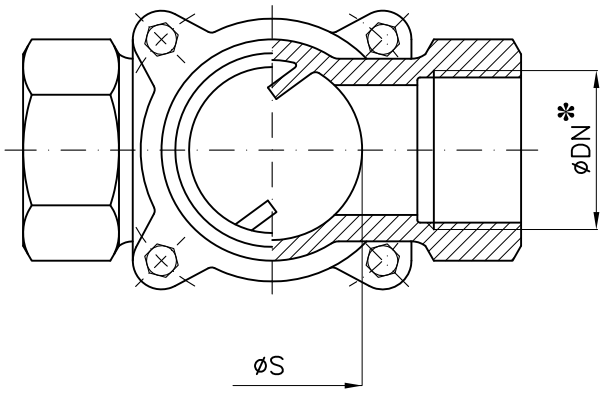

*: Filettatura GAS
*: *BSPP threaded*

DN	H	L	S	Weight (Kg)
3/8"	80	107	44	1.3
1/2"	80	105	44	1.3
3/4"	90	110	44	1.5
1"	92	116	44	1.7
1"1/4	112	126	50	2.5
1"1/2	118	135	50	2.8
2"	140	170	63	5
2"1/2	145	180	82	6.5

Combinazione materiali standard – Standard materials Combination		
		B/GLASS
ITEM	DENOMINAZIONE DENOMINATION	MATERIALE MATERIAL
01	Body	Bronze UNI EN1982 G–CuSn5Zn5Pb5
02	Ring nut	Bronze UNI EN1982 G–CuSn5Zn5Pb5
03	Window	Tempered or borosilicate glass

Nota: Combinazioni materiali non standard a richiesta
Note: Non standard materials combinations on request

Spie di controllo a due cristalli in acciaio inox AISI316
Sight glasses double window stainless steel AISI316

Art.2056

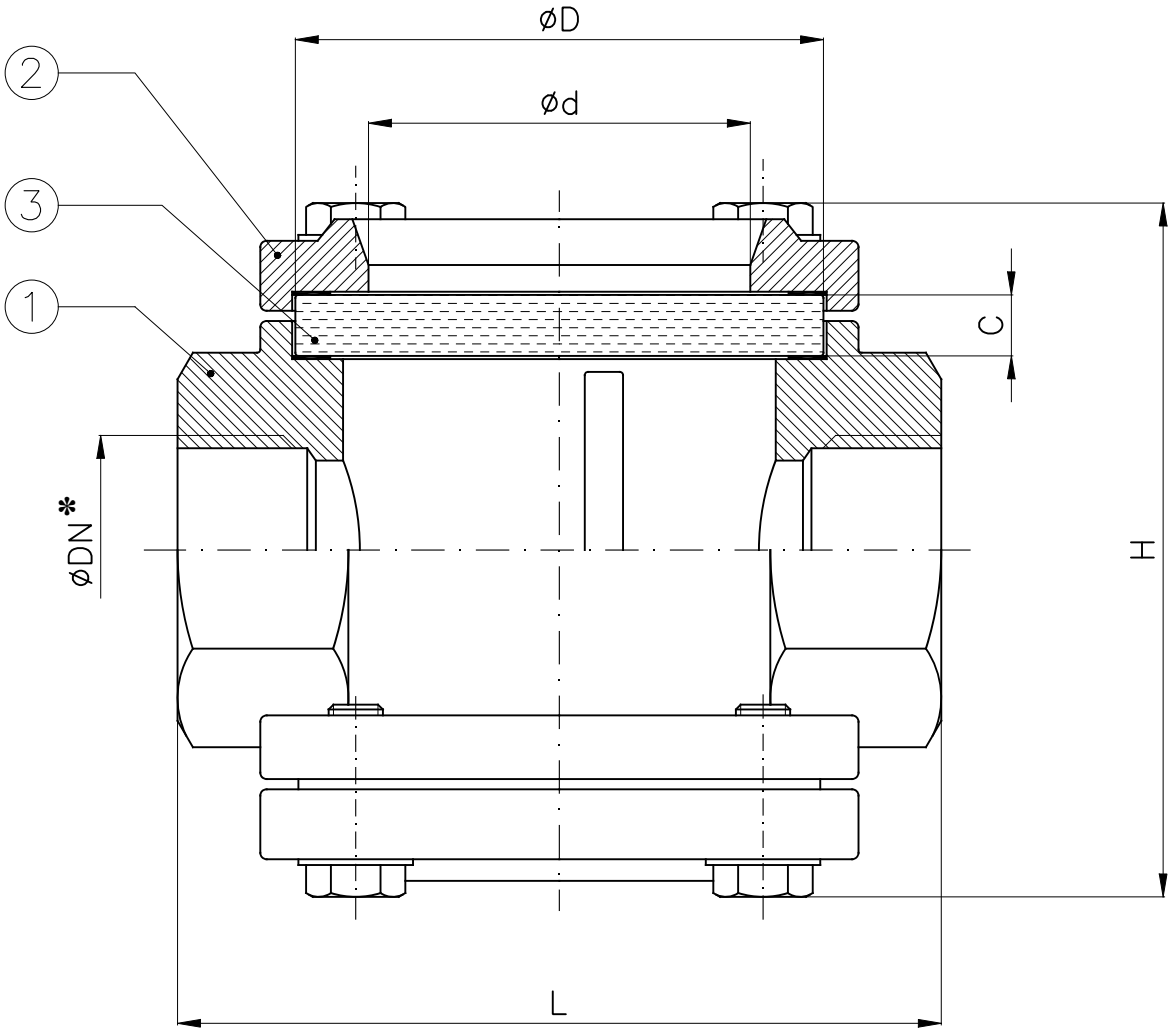

*: Filettatura GAS
*: *BSPP threaded*

DN	C	D	d	H	L
1/2"	8	55	38	70	100
3/4"	8	55	38	90	120
1"	8	55	38	90	120
1"1/4	8	60	48	120	150
1"1/2	8	60	48	120	150
2"	10	70	58	140	180

Combinazione materiali standard – Standard materials Combination		
		CF8M/GLASS
ITEM	DENOMINAZIONE DENOMINATION	MATERIALE MATERIAL
01	Body	Stainless steel CF8M ASTM A351
02	Ring nut	Stainless steel AISI316 UNI EN10088
03	Window	Tempered glass

Nota: Combinazioni materiali non standard a richiesta
Note: Non standard materials combinations on request

Indicatori di livello PN25 a riflessione multiplo a interasse fisso in acciaio A105 o AISI316L

A105 or AISI316L multiple reflection level gauge NP25 with fixed distance between centers

Art.04.57

Conform to:
DIN7081

Approved by:
Lloyd's Register

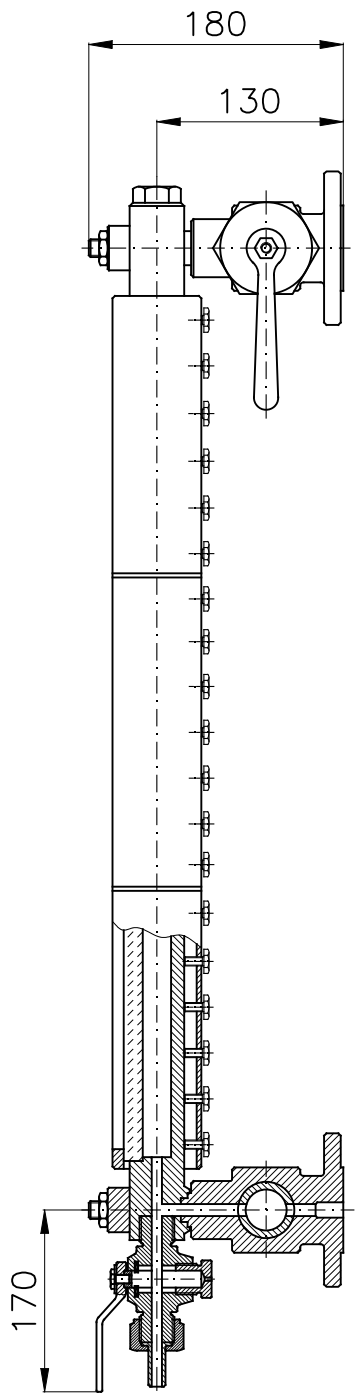

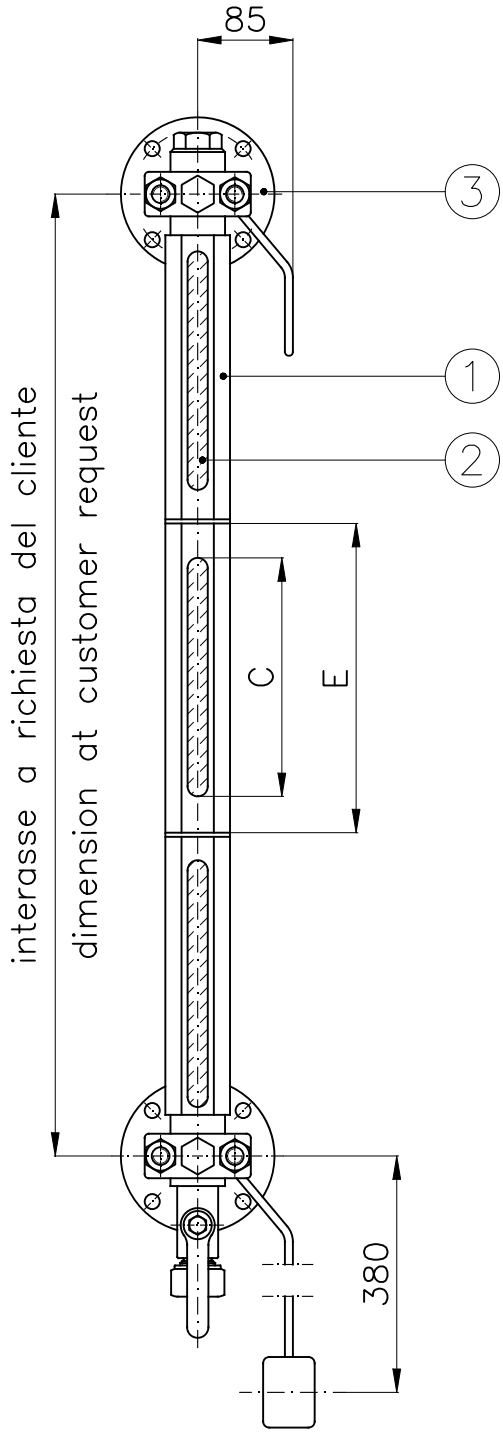

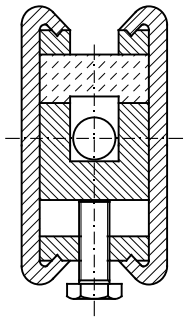

Tipo Type	1	2	3	4	5	6	7	8	9
C	90	115	140	168	195	225	255	295	315
E	130	155	180	205	235	265	295	335	360
L.vetro glass L.	115	140	165	190	220	250	280	320	340

Combinazione materiali standard – Standard materials Combination

ITEM	DENOMINAZIONE DENOMINATION	MATERIALE MATERIAL
01	Frame	Stainless steel ASTM A105 or AISI316L
02	Window	Borosilicate glass
03	Valves	Galvanized carbon steel

Nota: Combinazioni materiali non standard a richiesta
Note: Non standard materials combinations on request

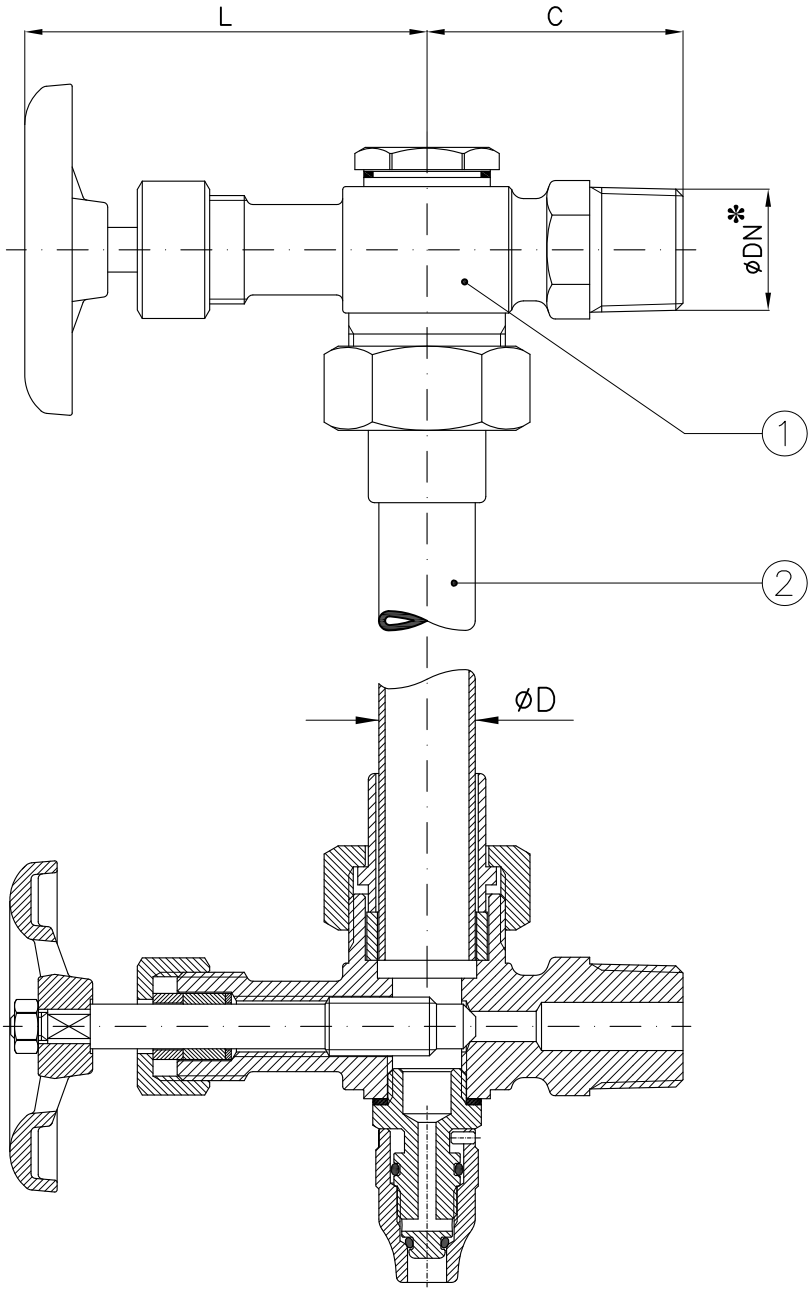

*: Filettatura GAS
*: *BSPP threaded*

DN	C	D	L	Weight (Kg)
1/4"	31	10	73	0.5
3/8"	38	13	71	0.62
1/2"	42	13	71	0.76
1/2"	42	16	71	0.78
3/4"	45	18	83	1.1
3/4"	45	20	83	1.1

Combinazione materiali standard – Standard materials Combination		
		O/META-ACRYLATE
ITEM	DENOMINAZIONE DENOMINATION	MATERIALE MATERIAL
01	Valve	Brass CW617N (OT58)
02	Tube	Meta-acrylate

Nota: Combinazioni materiali non standard a richiesta
Note: Non standard materials combinations on request

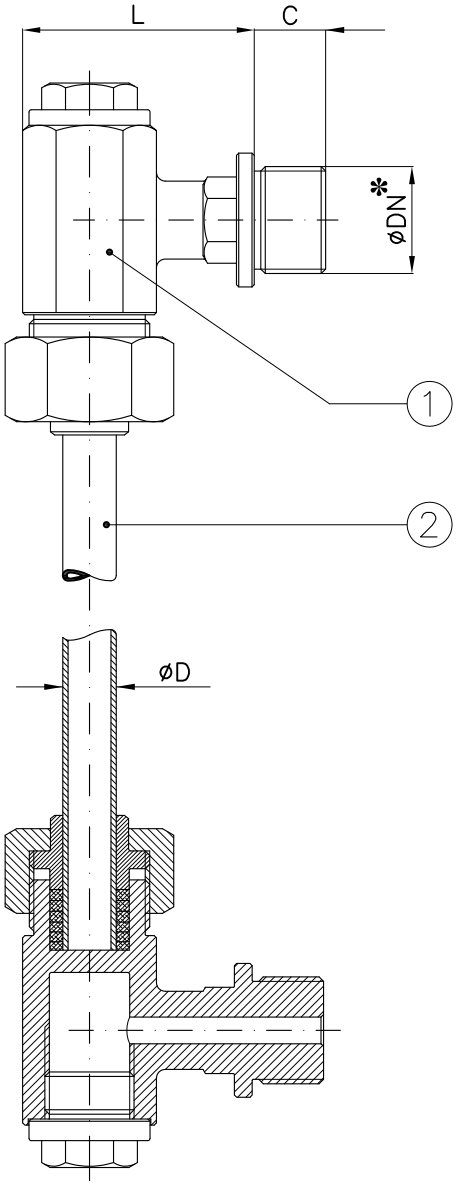

*: Filettatura GAS
*: *BSPP threaded*

DN	C	D	L	Weight (Kg)
1/4"	12	10	37	0.26
3/8"	15.5	13	41	0.36
1/2"	15.5	16	52	0.54
3/4"	16	20	78	1.6
1"	20	25	84	1.9
1"1/4	23	30	95	3

Combinazione materiali standard – Standard materials Combination		
		O/META-ACRYLATE
ITEM	DENOMINAZIONE DENOMINATION	MATERIALE MATERIAL
01	Valve	Brass CW617N (OT58)
02	Tube	Meta-acrylate
Nota: Combinazioni materiali non standard a richiesta Note: Non standard materials combinations on request		

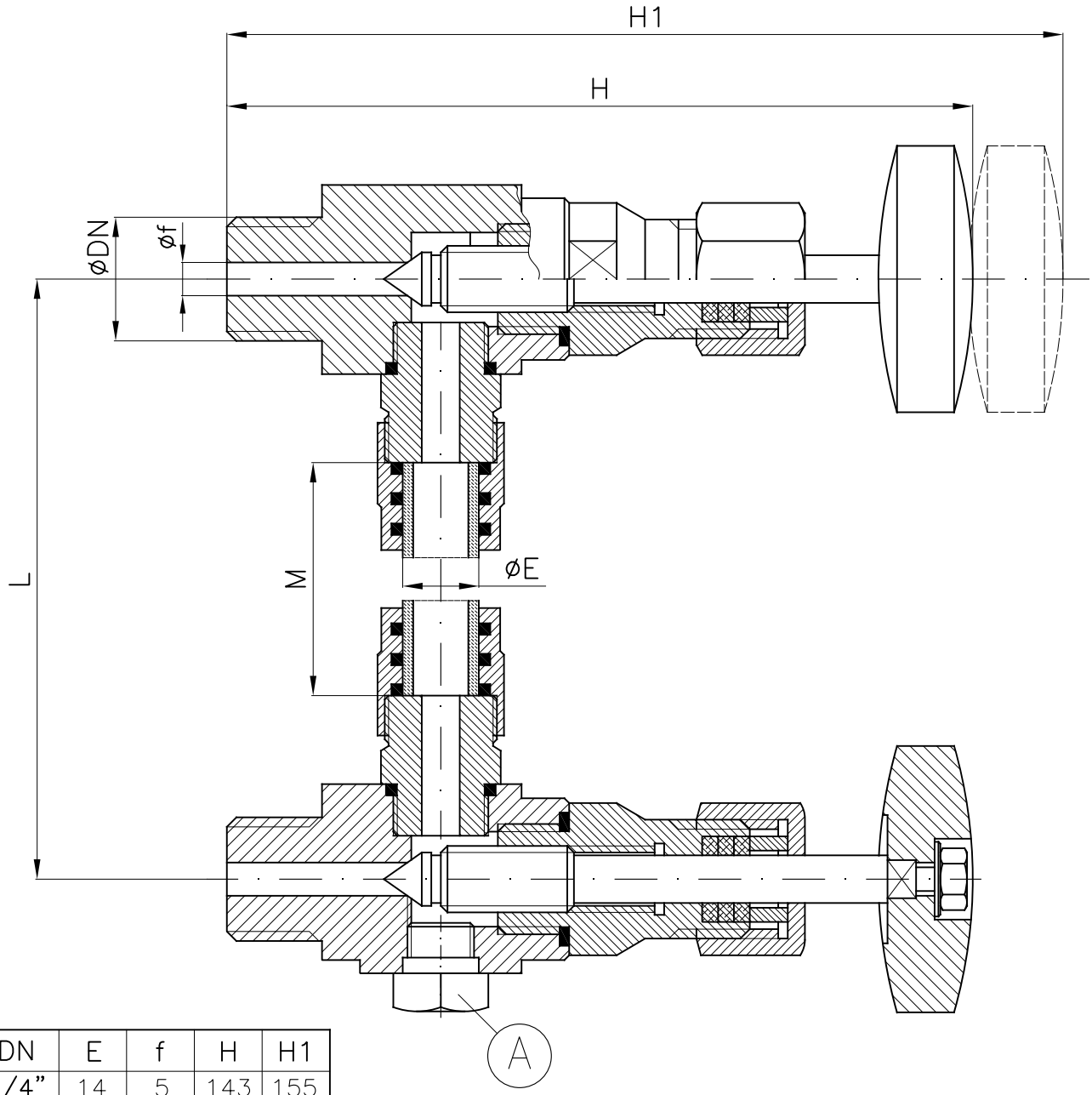

DN	E	f	H	H1
1/4"	14	5	143	155
3/8"	14	5	143	155
1/2"	14	5	143	155
3/4"	14	5	143	155

MATERIALE STANDARD: 316L UNI EN 10088	STANDARD MATERIAL: 316L UNI EN 10088
ADATTI PER TUBO VETRO O PLASTICA O SIMILARE DIAMETRO 14mm	SUITABLE FOR GLASS, PLASTIC OR SIMILAR PIPE 14mm DIAM.
LA VERSIONE 3/4" PUO' ESSERE FORNITA CON NIPPLO DI RIDUZIONE (DA DN 3/4" A DN 1/2")	DIAM. 3/4" SIZE, CAN BE SUPPLIED WITH A REDUCTION NIPPLE (FROM 3/4" TO 1/2")
LA LUNGHEZZA DEL TUBO DI VETRO (M) SI CALCOLA TOGLIENDO 66mm DALLA MISURA DELL'INTERASSE (L)	GLASS PIPE LENGTH (M) IS OBTAINED FROM THE CENTERLINE (L) MINUS 66mm
A RICHIESTA POSSONO ESSERE FORNITI CON RUBINETTO DI SCARICO AL POSTO DEL TAPPO INFERIORE (A)	UPON REQUEST CAN BE SUPPLIED WITH DRAIN COCK INSPITE OF THE LOWER PLUG (A)
A RICHIESTA CON ATTACCHI FLANGIATI	FLANGED ENDS UPON REQUEST
GLI INDICATORI VENGONO FORNITI SENZA IL TUBO DI VETRO	THE LEVEL GAUGES ARE SUPPLIED WITHOUT THE GLASS PIPE

Conform to:
UNI EN1092

UNAV 5608.1 - Tab.180.1

Con attacco diritto per ponti superiori rivestiti in legno
With straight connection for top covered wooden decks

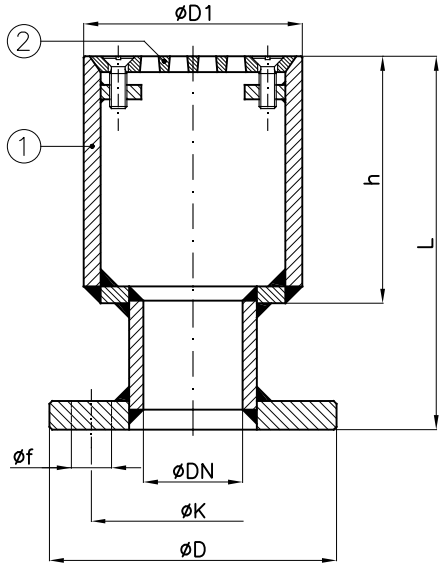

UNAV 5609.1 - Tab.180.2

Con attacco ad angolo per ponti superiori rivestiti in legno
With angle connection for top covered wooden decks

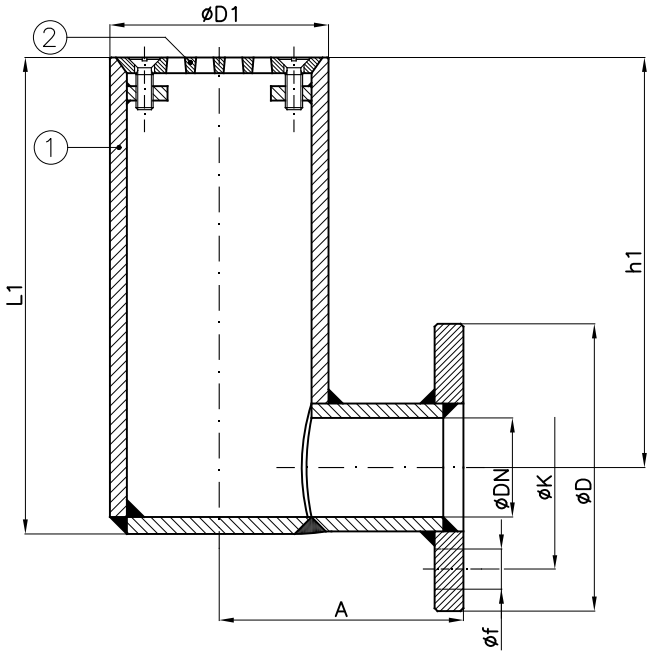

UNAV 5610.1 - Tab.180.3

Inodori – Con attacco diritto per ponti in acciaio con fasciamento
Odourless – With straight connection for steel decks

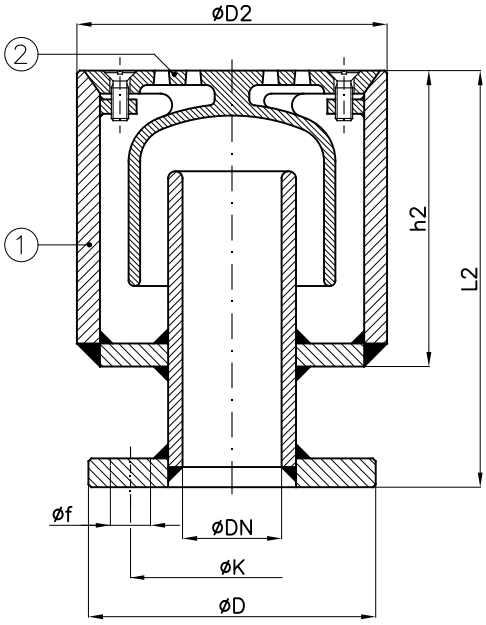

UNAV 5611.1 - Tab.180.4

Inodori – Con attacco ad angolo per ponti in acciaio con fasciamento
Odourless – With angle connection for steel decks

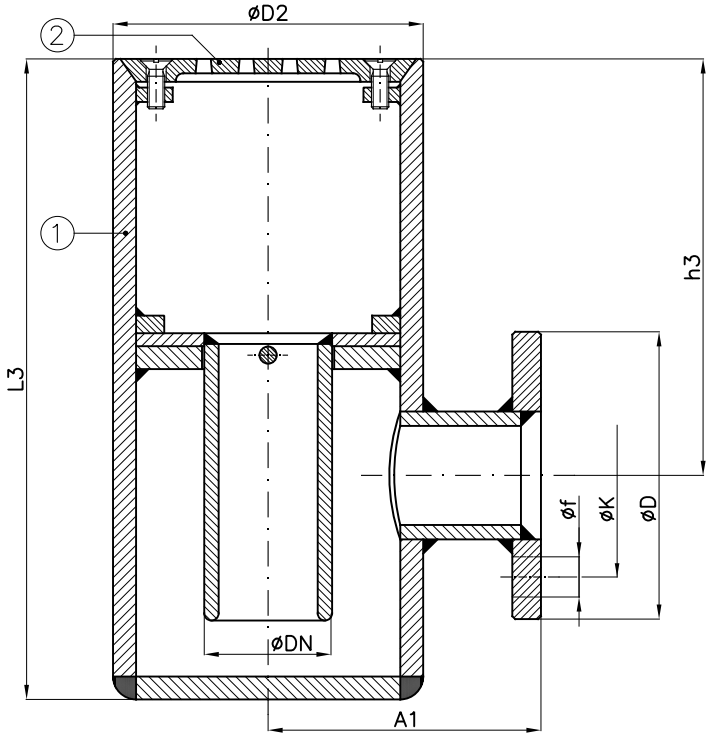

DN	A	A1	D1	D2	h	h1	h2	h3	L	L1	L2	L3	D	K	f	n°fori f	Weight (Kg) Tab.180.1	Weight (Kg) Tab.180.2	Weight (Kg) Tab.180.3	Weight (Kg) Tab.180.4
40	85	95	78	110	86	143	103	145	130	166	145	223	130	100	14	4				5
50	100	110	104	135	87	146.5	118	150	140	177	165	243	140	110	14	4		4.5		7.5
65	115	130	116	161	88	158	140	160	150	198	190	280	160	130	14	4				
80	125	150	135	196	88	171.5	165	170	160	218	220	305	190	150	18	4				
100	–	165	–	221	–	–	185	180	–	–	245	335	210	170	18	4				

Combinazione materiali standard – Standard materials Combination				
		A/316	A/O	316/316
ITEM	DENOMINAZIONE DENOMINATION	MATERIALE MATERIAL	MATERIALE MATERIAL	MATERIALE MATERIAL
01	Body	Carbon steel S275JR	Carbon steel S275JR	Stainless steel AISI316L UNI EN10088
02	Grill	Stainless steel AISI316 UNI EN10088	Brass CW617N (OT58)	Stainless steel AISI316L UNI EN10088
Nota: Combinazioni materiali non standard a richiesta Note: Non standard materials combinations on request				

www.medanaevisca.it

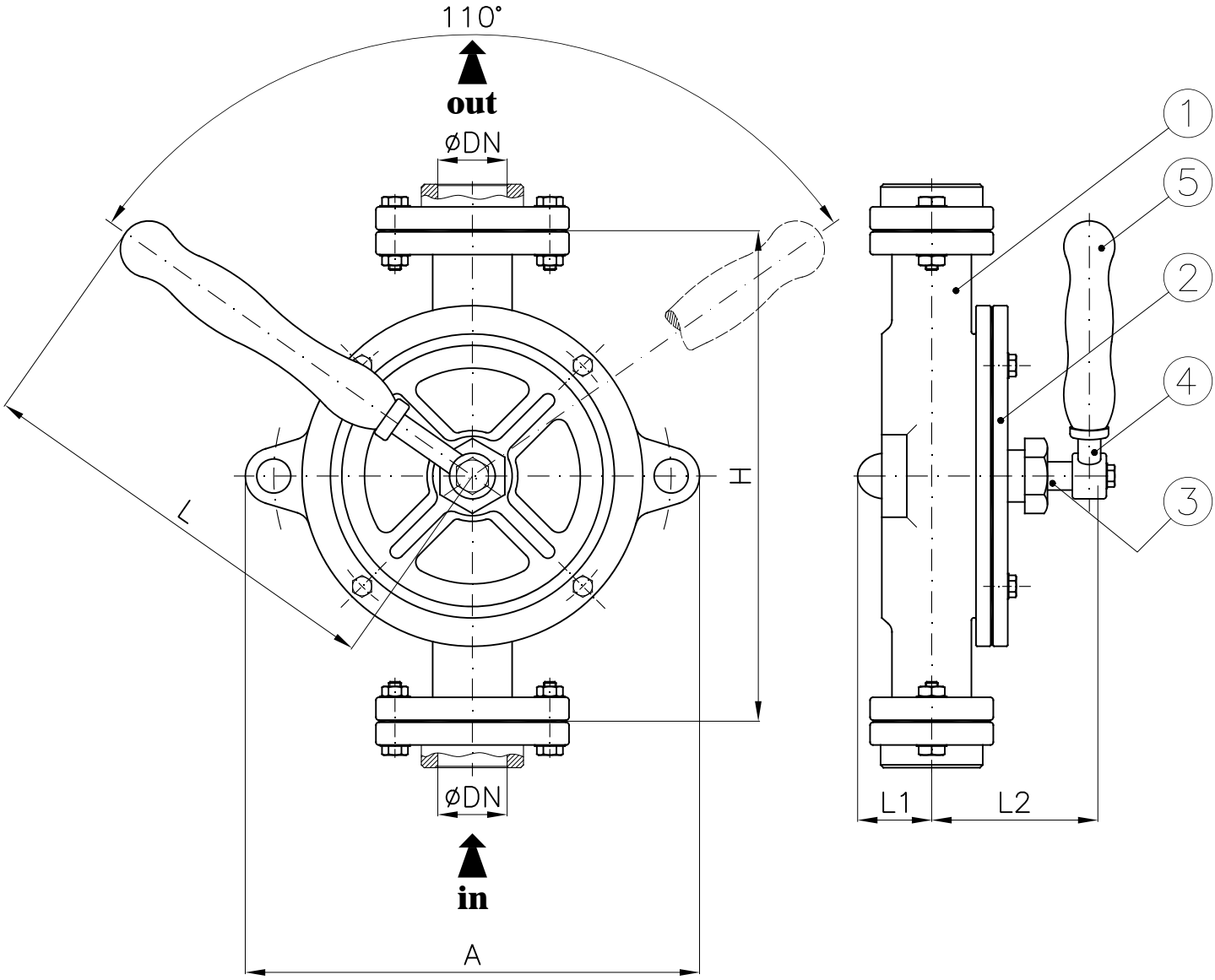

	DN	A	H	L	L1	L2	Weight (Kg)
K–0	1/2”	160	175	300	55	140	5.1
K–1	3/4”	180	205	300	55	140	6.2
K–2	1”	200	230	360	60	145	9
K–3	1”1/4	240	275	450	62	170	11.5
K–4	1”1/2	255	295	500	74	190	12.3
K–5	1”1/2	275	320	600	76	200	15.3

Combinazione materiali standard – Standard materials Combination		
		G/B
ITEM	DENOMINAZIONE DENOMINATION	MATERIALE MATERIAL
01	Body	Cast iron UNI EN1561 EN–GJL–250
02	Bonnet	Cast iron UNI EN1561 EN–GJL–250
03	Stem	Brass CW614N (OT58)
04	Lever	Cast iron UNI EN1561 EN–GJL–250
05	Handle	Wood
Nota: Note:	Combinazioni materiali non standard a richiesta Non standard materials combinations on request	

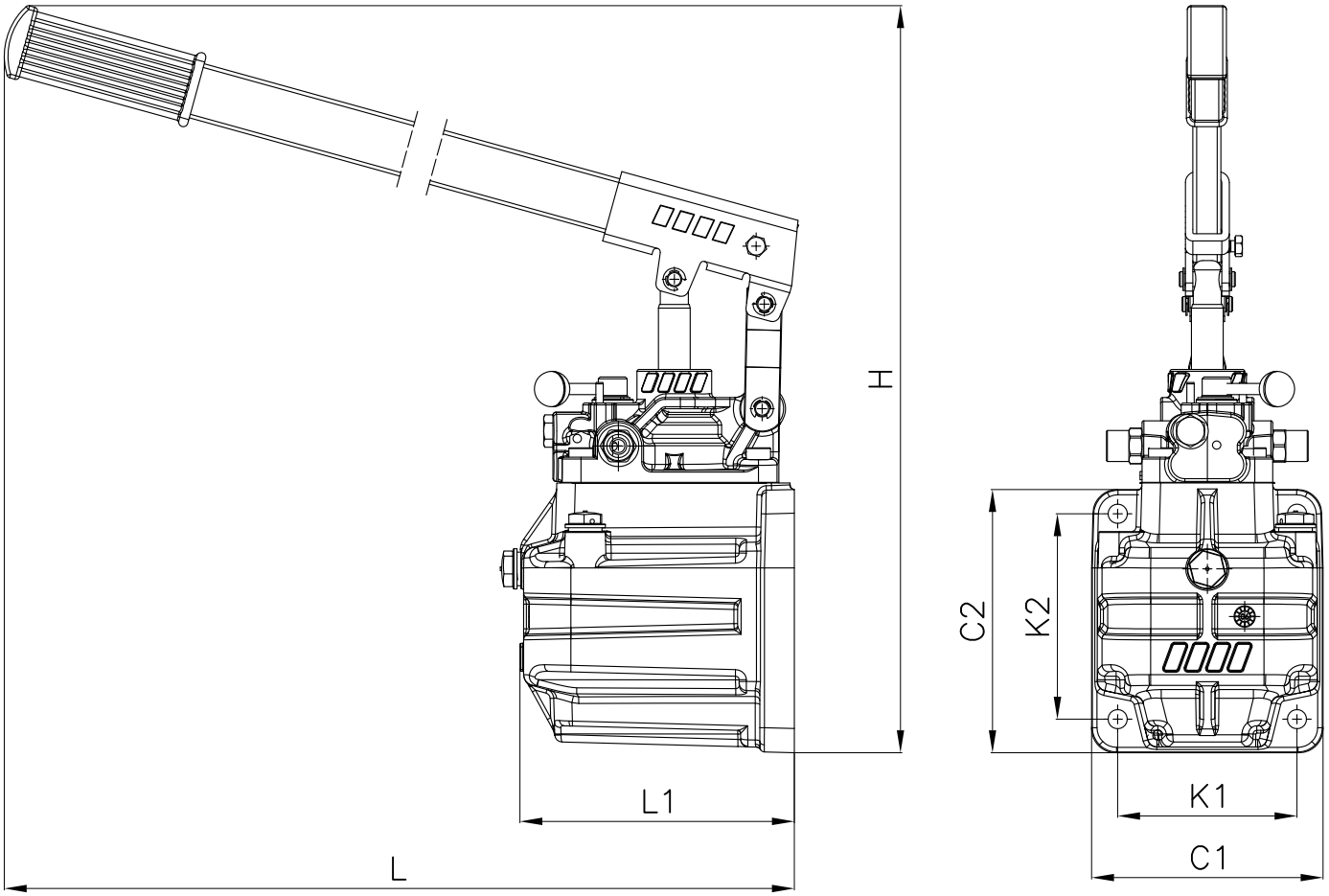

ATTACCHI (*PORTS*): 1/4 G

SERBATOIO (*TANK*): 1-3 litri

POMPA (*PUMP*): PMI -25

POMPA *PUMP*	L (~)	H (~)	L1	C1	C2	K1	K2	d
PMI-25-1 (1l.)	580	450	145	124	141	96	110	10
PMI-25-3 (3l.)	580	500	166	208	118	180	90	10.5

Pompa a mano portatile (barellabile)
Portable manual emergency pump

PMI25VSS

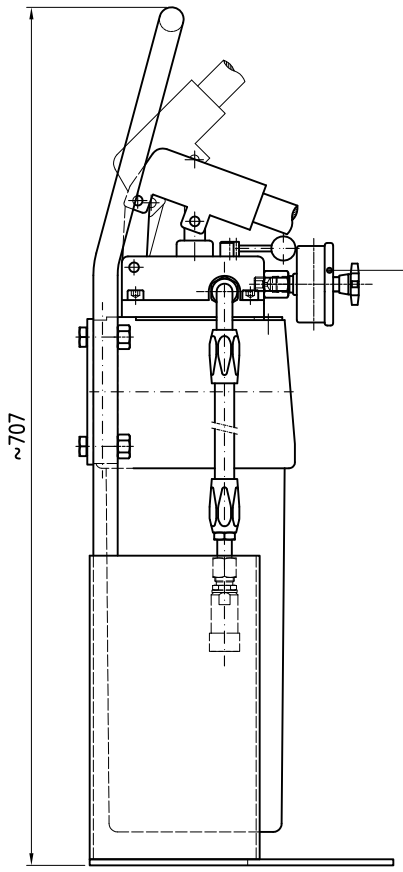

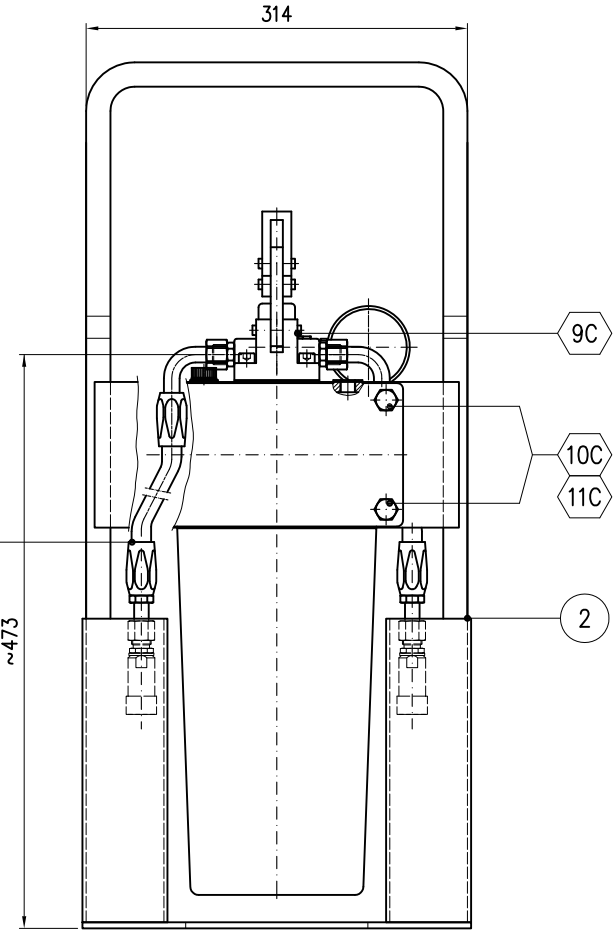

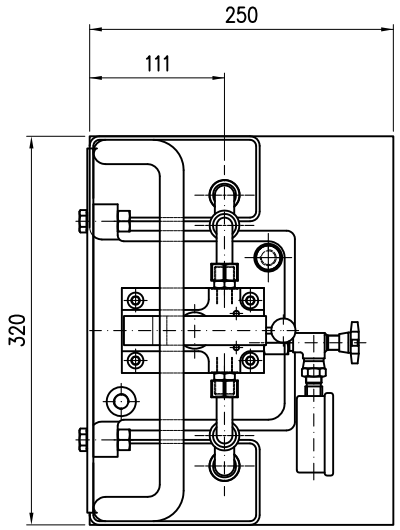

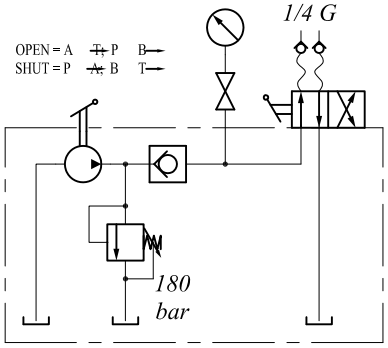

ITEM	DENOMINAZIONE DENOMINATION
01	Straight adapter male (1/4"Gas x M12x1.5)
02	Welded frame
1C	Pressure gauge
2C	Valve
3C	Hydraulic fitting 3/8"Gas BSP elbow
4C	Nylon tube (4m.)
5C	Hydraulic fitting 3/8"Gas BSP elbow
6C	Straight adapter male (3/8"Gas x 1/4" Gas)
7C	Bonded seal
8C	Female quick coupling
9C	Hand pump
10C	Hexagonal head screw
11C	Hexagonal nut

ATTACCHI (*PORTS*): 1/4 G
SERBATOIO (*TANK*): 7 litri
POMPA (*PUMP*): PMI 25-S/7 + VS

Pompa a mano con dispositivo di sblocco a tirare
Hand pump with release device to pull

SHR/1987

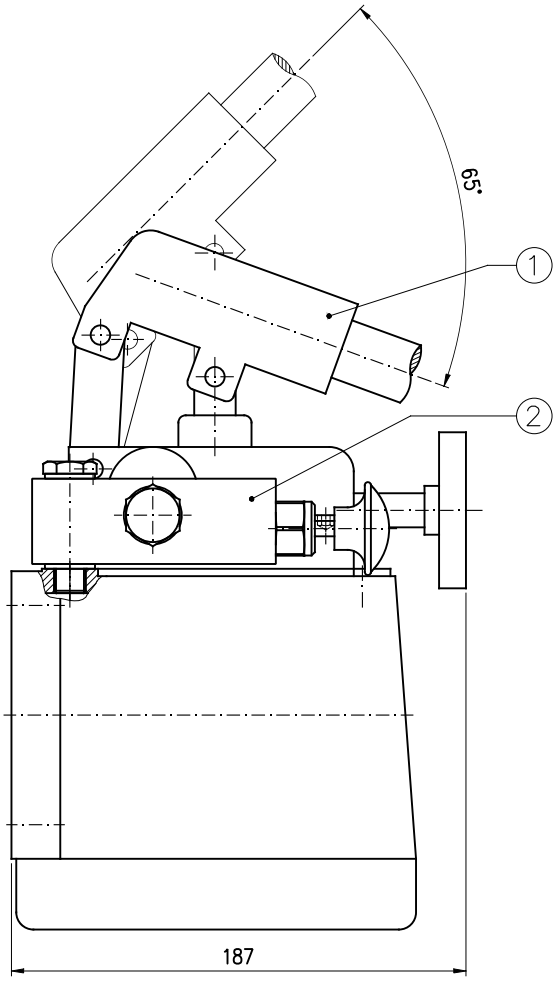

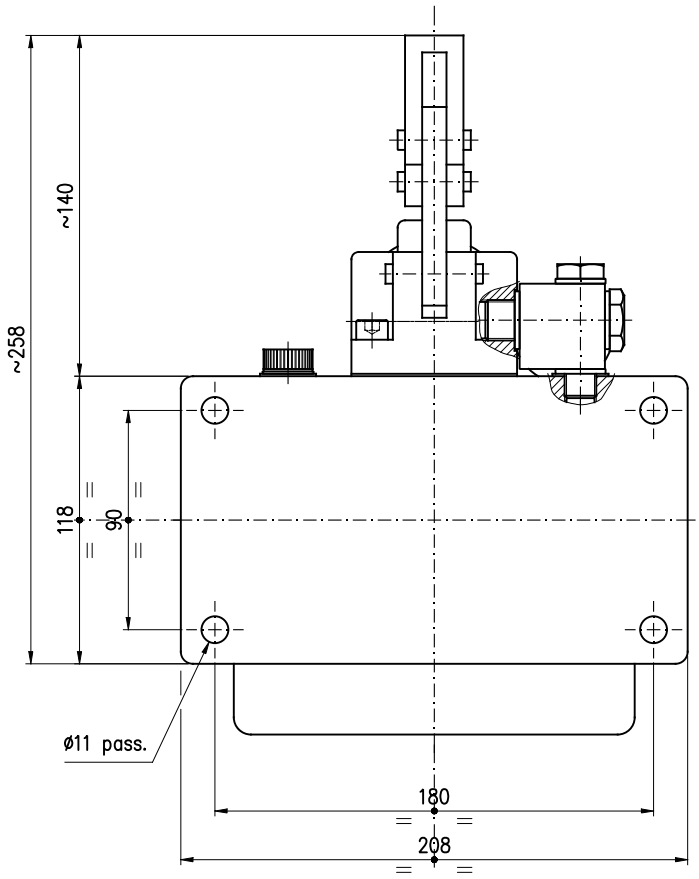

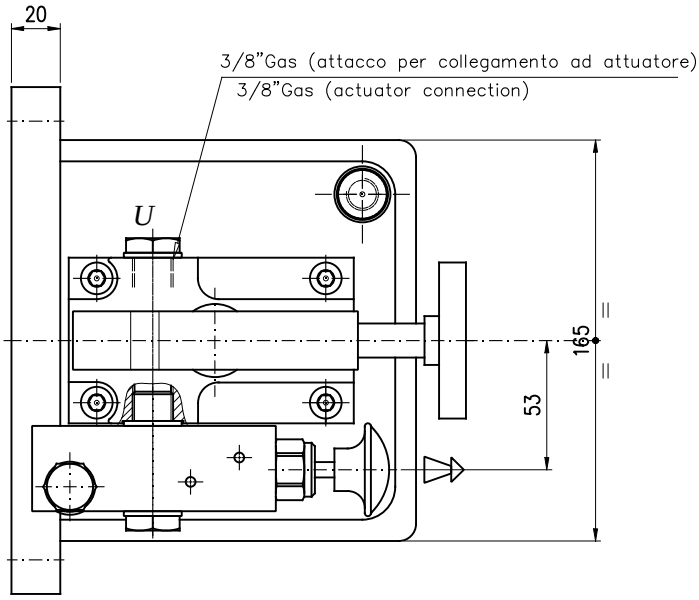

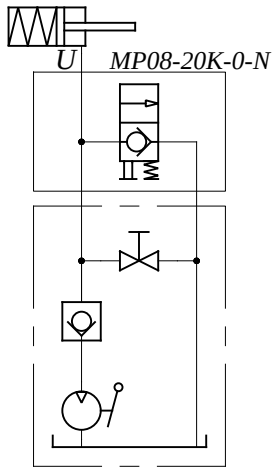

ITEM	DENOMINAZIONE DENOMINATION
01	Hand pump 25 cmc – Tank 3 l
02	Hand pump system

Centralina elettro idraulica per albero telescopico
Electro hydraulic power unit for telescopic shaft

Tab.MPP-C.PKAC

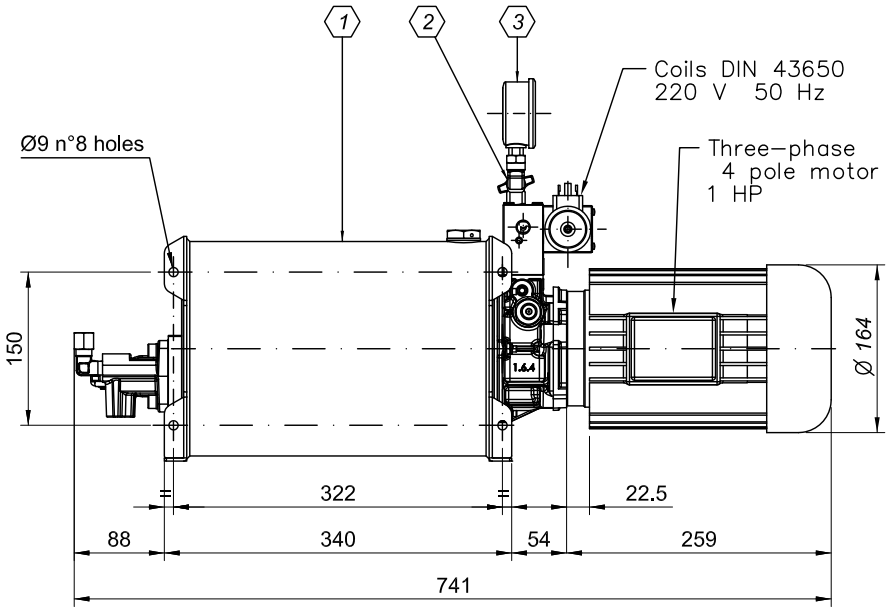

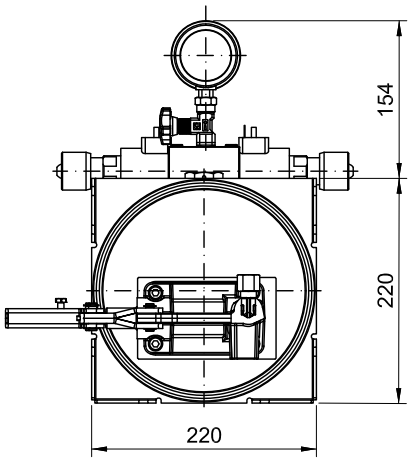

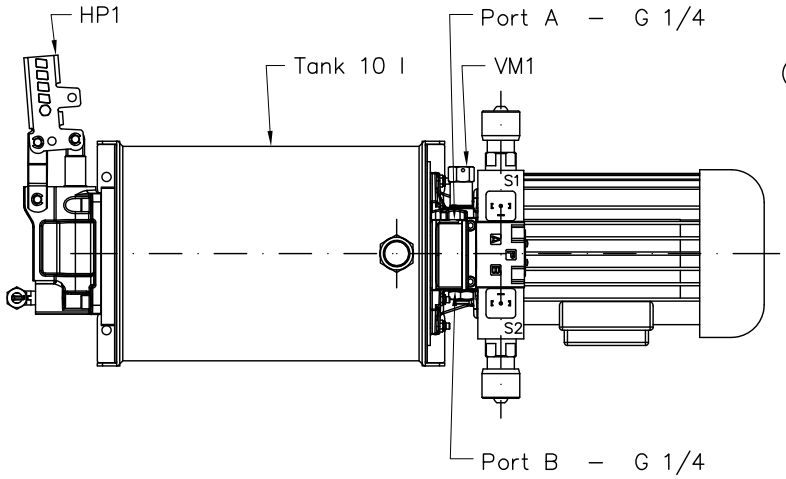

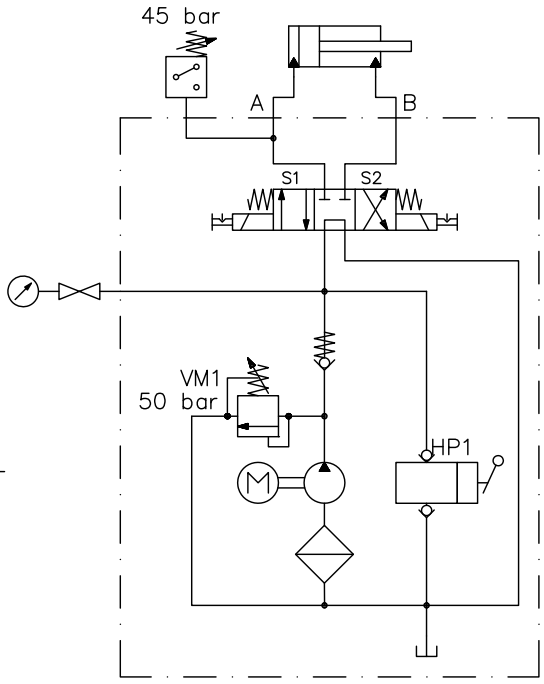

Pos.	Codice/Code	Descrizione	Description	N°	Note
1C	C.PKAC1HP047000	CENTR. 4.7CC-1HP-T4P-10L-000	MINI POWER PACK	1	
2C	C.FT290.1/4	RUBINETTO PER MANOMETRO 1/4	IN LINE GAUGE ISOLATOR	1	
3C	C.MGS10/3/A25	MANOMETRO RADIALE D63 0-250bar	PRESSURE GAUGE	1	
4C	CEFX.F4T1/30U/D	PRESS. 1/4G 5/50BAR TAR.30U N.C. DT04-2P	PRESSURE SWITCH	1	INST. TORQUE : 27 Nm

Valvole sfogo aria per ponti esposti - Tipo WINEL RM1 PN10 UNI/DIN
Tank vent check valves - Type WINEL RM1 NP10 UNI/DIN

Tab.207

Conform to:
UNI-EN1092

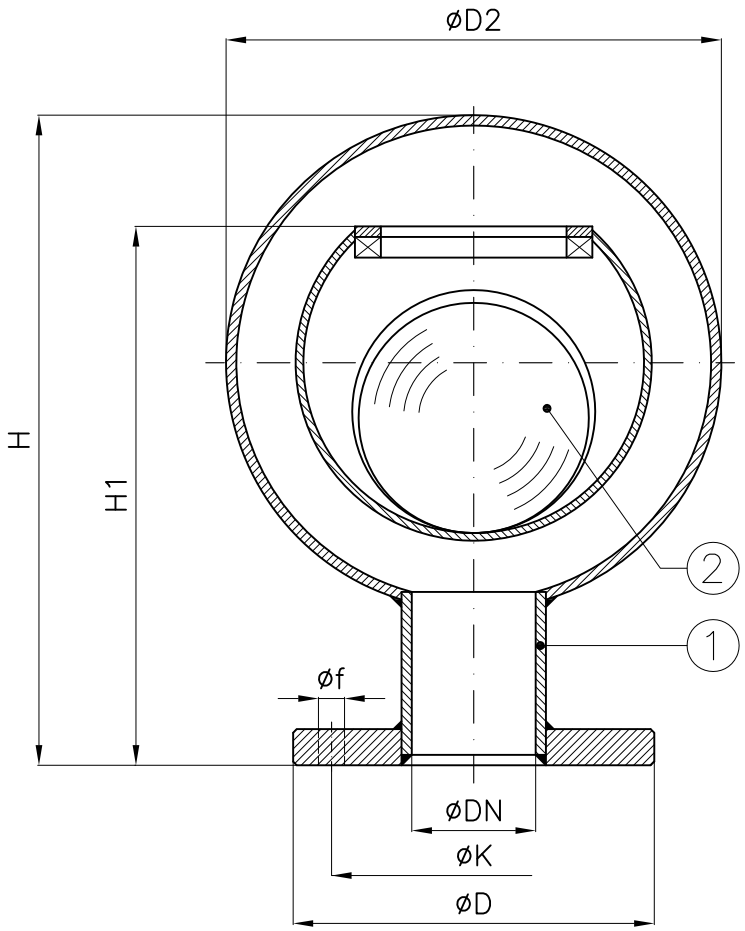

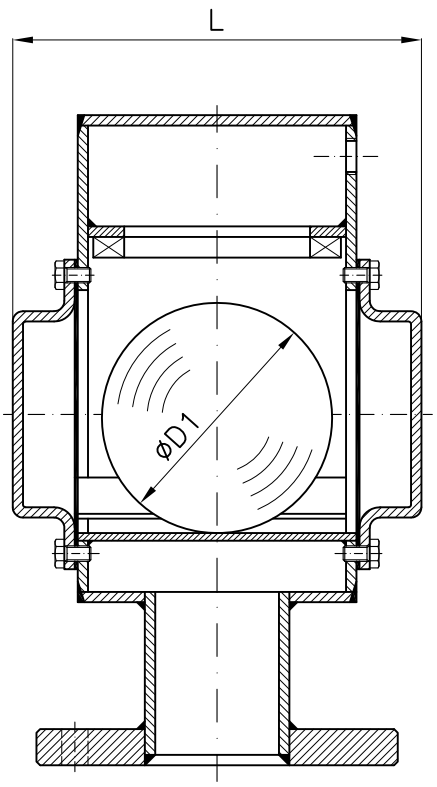

Velocità flusso: max. 4 m/s
Airflow velocity: max. 4 m/s

DN	D1	D2	H	H1	L	D	K	f	Holes NO. f	Weight (Kg)
40	85	216	294	238	170	150	110	18	4	12
50	85	216	294	238	170	165	125	18	4	12
65	120	275	354	281	220	185	145	18	4	19
80	120	275	354	281	220	200	160	18	8	20
100	145	347	422	332	250	220	180	18	8	30
125	185	414	506	404	290	250	210	18	8	43
150	240	496	590	465	340	285	240	22	8	61
175	240	496	590	465	340	315	270	22	8	63

Combinazione materiali standard – Standard materials Combination		
ITEM	DENOMINAZIONE DENOMINATION	MATERIALE MATERIAL
01	Body	Galvanized steel
02	Float ball	Polyethylene (PE)
Nota: Combinazioni materiali non standard a richiesta Note: Non standard materials combinations on request		

Approved by:

American Bureau of Shipping, Bureau Veritas,
Croatian Register of Shipping,
Det Norske Veritas, Germanisher Lloyd, Lloyd's Register,
Registro Italiano Navale,
Russian Maritime Register of Shipping.

Valvole sfogo aria - Tipo BOLERO PN10 UNI/DIN
Tank vent check valves - Type BOLERO NP10 UNI/DIN

Tab.207B

Conform to:
UNI-EN1092

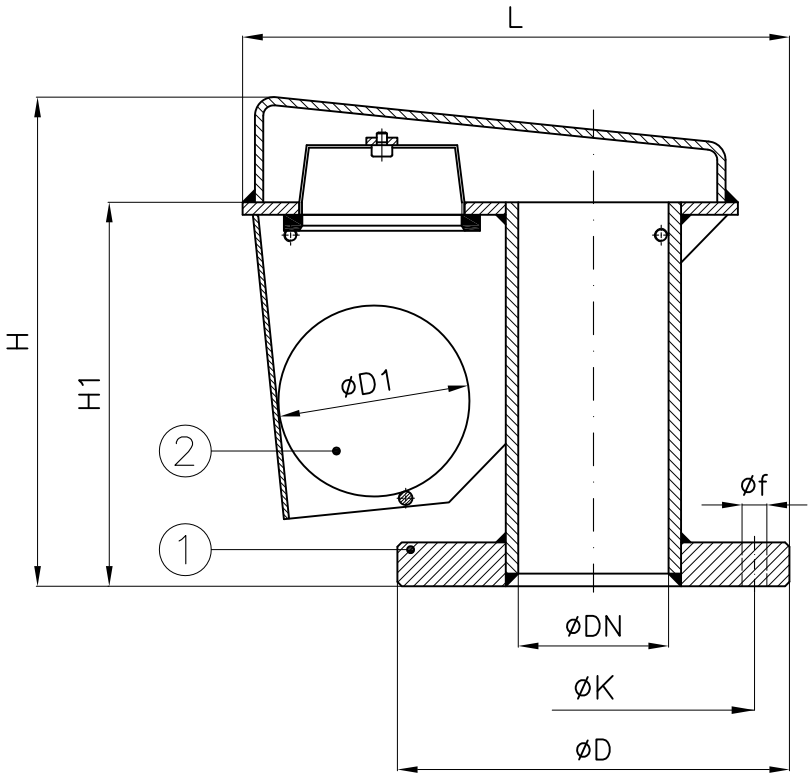

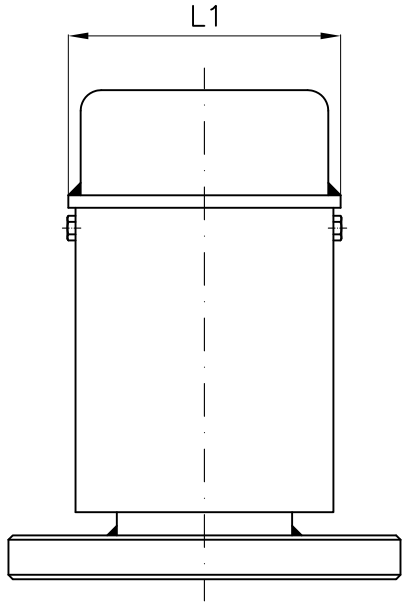

Velocità flusso: max. 4 m/s
Airflow velocity: max. 4 m/s

DN	D1	H	H1	L	L1	D	K	f	Holes NO. f	Weight (Kg)
40	70	227	171	210	118	150	110	18	4	7
50	70	227	171	217	118	165	125	18	4	8
65	85	254	186	255	133	185	145	18	4	10
80	100	285	216	285	148	200	160	18	8	13
100	130	352	271	330	168	220	180	18	8	18
125	155	407	301	381	193	250	210	18	8	26
150	185	452	321	445	218	285	240	22	8	35
175	240	672	471	569	275	315	270	22	8	61
200	240	672	471	581	275	340	295	22	8	64
250	300	772	551	703	338	395	350	22	12	92

Combinazione materiali standard – Standard materials Combination		
ITEM	DENOMINAZIONE DENOMINATION	MATERIALE MATERIAL
01	Body	Galvanized steel
02	Float ball	Polyethylene (PE)
Nota: Combinazioni materiali non standard a richiesta Note: Non standard materials combinations on request		

Approved by:

American Bureau of Shipping, Bureau Veritas,
Croatian Register of Shipping,
Det Norske Veritas, Germanisher Lloyd, Lloyd's Register,
Registro Italiano Navale,
Russian Maritime Register of Shipping.

Valvole sfogo aria per sistemazione a murata - Tipo WINEL RMO PN10 UNI/DIN
Ship's side tank vent check valves - Type WINEL RMO NP10 UNI/DIN

Tab.208

Conform to:
UNI-EN1092

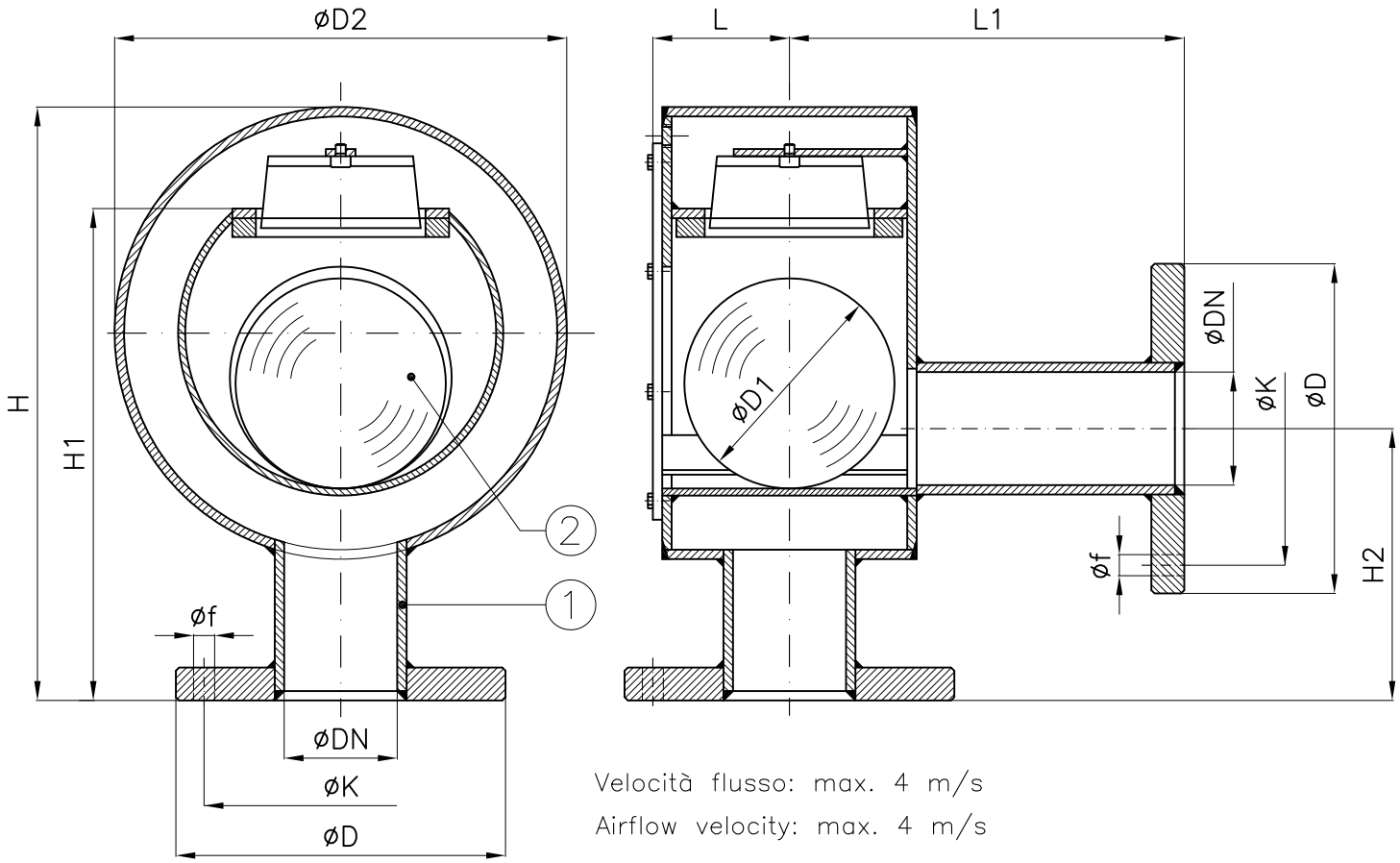

Velocità flusso: max. 4 m/s
Airflow velocity: max. 4 m/s

DN	D1	D2	H	H1	H2	L	L1	D	K	f	Holes NO. f	Weight (Kg)
40	85	210	299	239	145	62.5	200	150	110	18	4	14
50	85	210	299	239	150	62.5	200	165	125	18	4	16
65	120	264	342	270	152	82.5	220	185	145	18	4	24
80	120	264	347	275	165	82.5	220	200	160	18	8	25
100	145	338	412	335	185	97.5	235.5	220	180	18	8	36
125	185	402	510	410	227	112.5	250	250	210	18	8	53
150	240	492	581	461	240	136.5	275	285	240	22	8	74
175	240	492	580	461	252	136.5	295	315	270	22	8	79
200	300	587	685	556	310	172.5	310	340	295	22	8	108
250	325	642	748	590	330	195	335	395	350	22	12	134
300	360	767	886	695	382	205	345	445	400	22	12	169

Combinazione materiali standard – Standard materials Combination		
ITEM	DENOMINAZIONE DENOMINATION	MATERIALE MATERIAL
01	Body	Galvanized steel
02	Float ball	Polyethylene (PE)
Nota: Combinazioni materiali non standard a richiesta Note: Non standard materials combinations on request		

Approved by:

American Bureau of Shipping, Bureau Veritas,
Croatian Register of Shipping,
Det Norske Veritas, Germanisher Lloyd, Lloyd's Register,
Registro Italiano Navale,
Russian Maritime Register of Shipping.

Valvole sfogo aria per ponti esposti - Tipo WINEL RM2 PN10 UNI/DIN
Tank vent check valves - Type WINEL RM2 NP10 UNI/DIN

Tab.209

Conform to:
UNI-EN1092

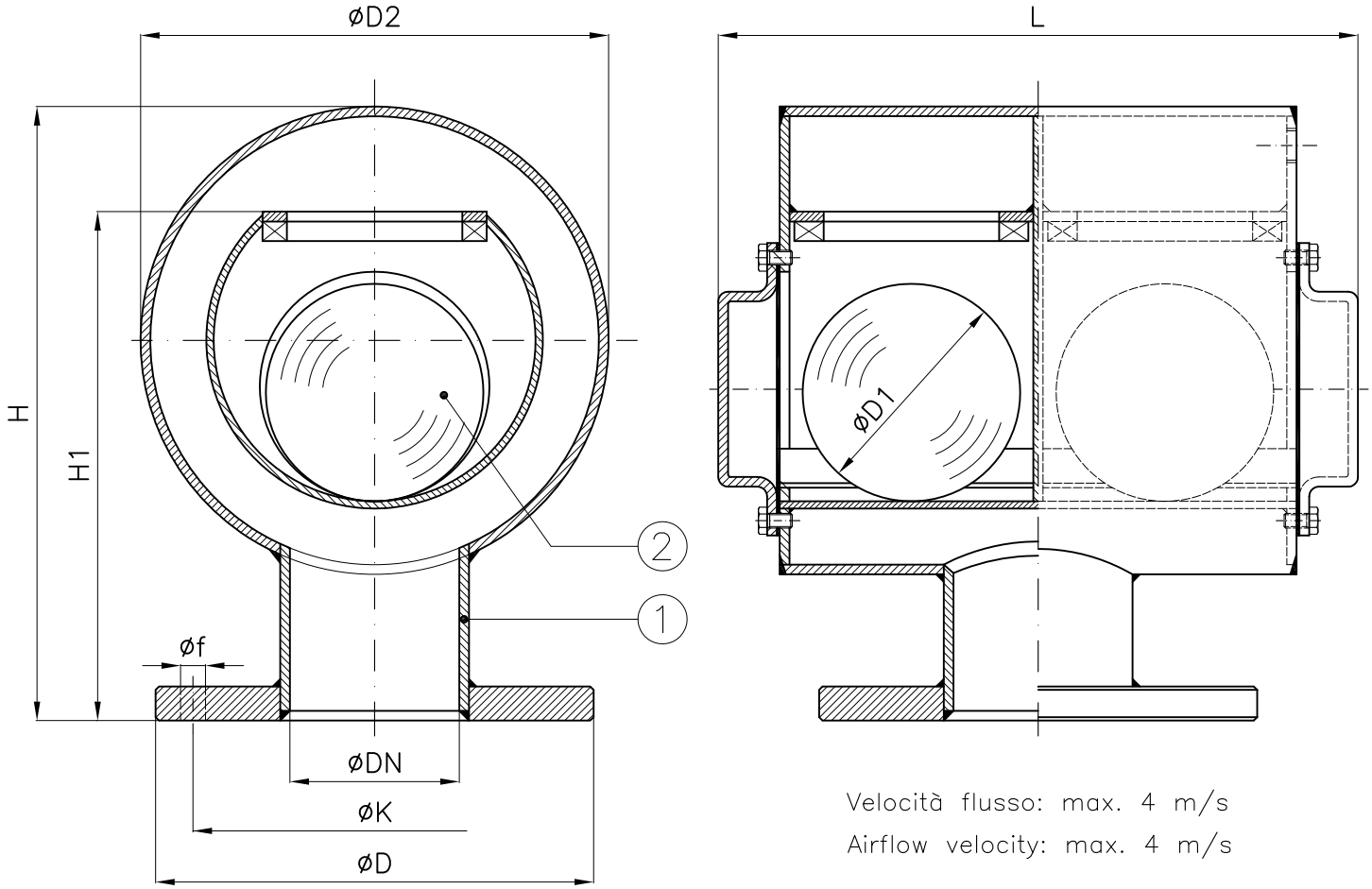

Velocità flusso: max. 4 m/s
Airflow velocity: max. 4 m/s

DN	D1	D2	H	H1	L	D	K	f	Holes NO. f	Weight (Kg)
200	185	414	531	432	585	340	295	22	8	76
250	240	502	650	526	705	395	350	22	12	112
300	300	593	733	588	820	445	400	22	12	151
350	325	646	800	661	890	505	460	22	16	190
400	325	772	890	710	960	565	515	26	16	274
450	360	872	950	800	1260	615	565	26	20	343

Combinazione materiali standard – Standard materials Combination		
ITEM	DENOMINAZIONE DENOMINATION	MATERIALE MATERIAL
01	Body	Galvanized steel
02	Float ball	Polyethylene (PE)
Nota: Combinazioni materiali non standard a richiesta Note: Non standard materials combinations on request		

Approved by:

American Bureau of Shipping, Bureau Veritas,
Croatian Register of Shipping,
Det Norske Veritas, Germanisher Lloyd, Lloyd's Register,
Registro Italiano Navale,
Russian Maritime Register of Shipping.

Valvole sfogo aria WIN2000 HIAS
Tank vent check valve WIN2000 HIAS

Tab.211

Conform to:
UNI-EN1092
IMO3573

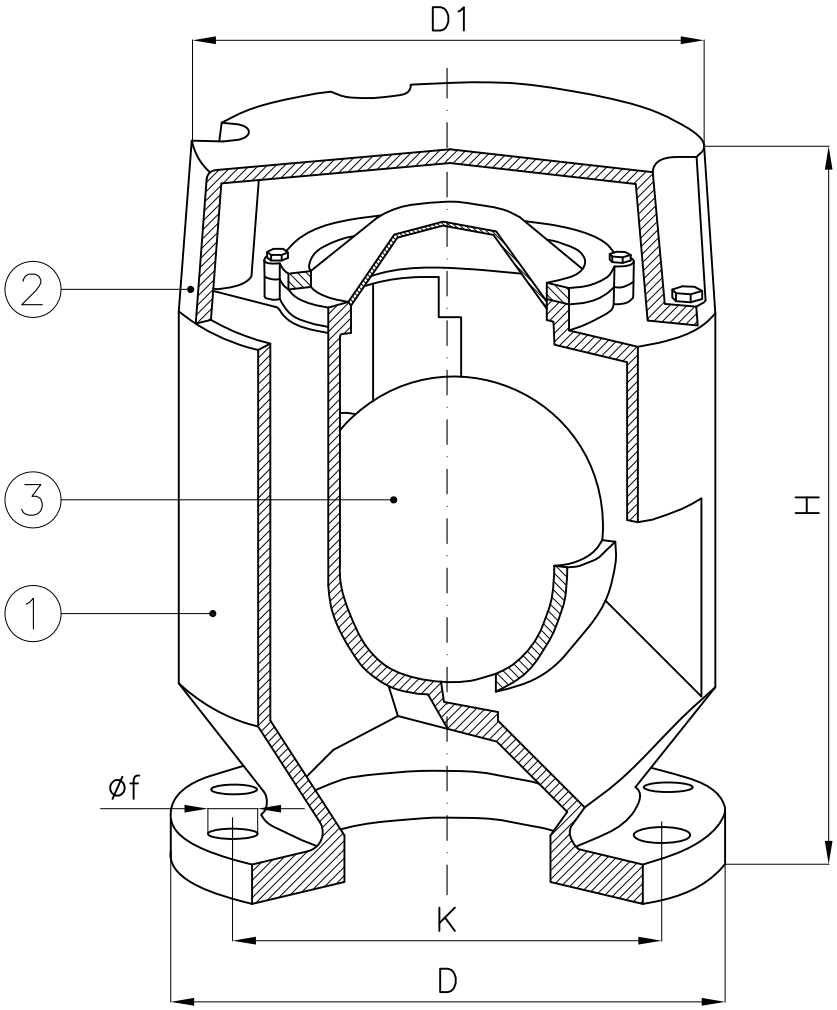

			PN6				PN10				PN16					
DN	D1	H	D	K	f	Holes NO. f	D	K	f	Holes NO. f	D	K	f	Holes NO. f	Weight (Kg)	Max.inlet air speed (m/s)
50	110	169	140	110	14	4	165	125	18	4	165	125	18	4	2	17
65	130	203	160	130	14	4	185	145	18	4	185	145	18	4	2.75	17.5
80	160	235	190	150	18	4	200	160	18	8	200	160	18	8	4	38
100	195	272	210	170	18	4	220	180	18	8	220	180	18	8	6.5	58
125	237	321	240	200	18	8	250	210	18	8	250	210	18	8	9	59
150	275	380	265	225	18	8	285	240	22	8	285	240	22	8	13	42
175	275	380	295	255	18	8	315	270	22	8	315	270	22	8	14	42
200	343	480	320	280	18	8	340	295	22	8	340	295	22	12	20	27
250	442	595	375	335	18	12	395	350	22	12	405	355	26	12	32	15
300	560	774	440	395	22	12	445	400	22	12	460	410	26	12	63	39
350	642	876	490	445	22	12	505	460	22	16	520	470	26	16	88	36
400	728	977	540	495	22	16	565	515	26	16	580	525	30	16	114	27
450	740	1146	595	550	22	16	615	565	26	20	640	585	30	20	134	34
500	887	1186	645	600	22	20	670	620	26	20	715	650	33	20	180	29

Combinazione materiali standard – Standard materials Combination		
ITEM	DENOMINAZIONE DENOMINATION	MATERIALE MATERIAL
01	Body	Aluminium DIN1725
02	Bonnet	Aluminium DIN1725
03	Float ball	Polyethylene (PE)
Nota: Combinazioni materiali non standard a richiesta Note: Non standard materials combinations on request		

Approved by:

American Bureau of Shipping, Bureau Veritas,
China Classification Society, Nippon Kaiji Kyokai,
Det Norske Veritas, Germanisher Lloyd, Lloyd's Register,
Registro Italiano Navale,
Inspectie Leefomgeving en Transport,
Turkish Lloyd's, Russian Maritime Register of Shipping.

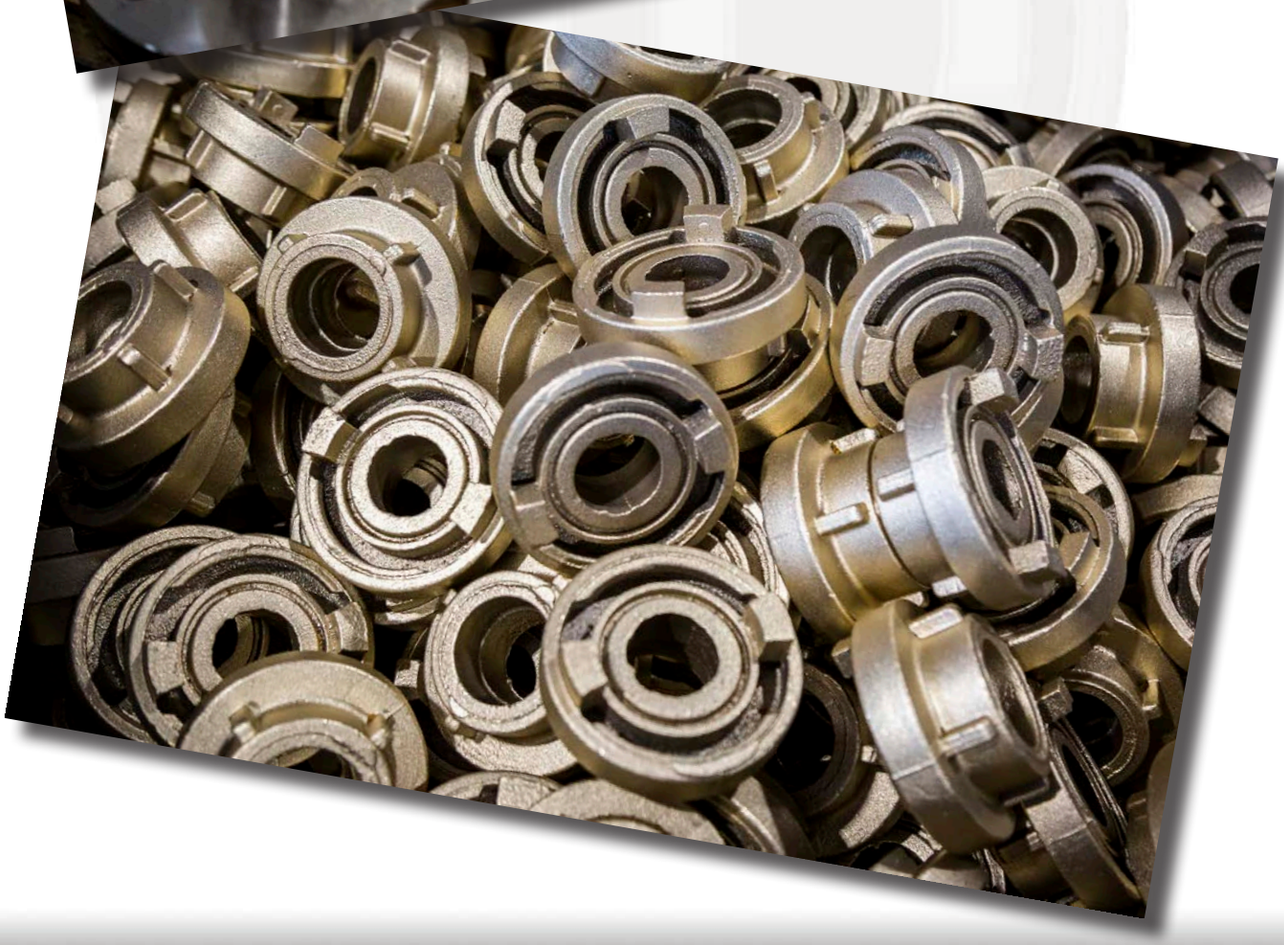

www.medanaevisca.it

Valvole di segregazione in linea PN6-PN10-PN16-ANSI150
Line blind flange valves NP6-NP10-NP16-ANSI150

Tab.203A

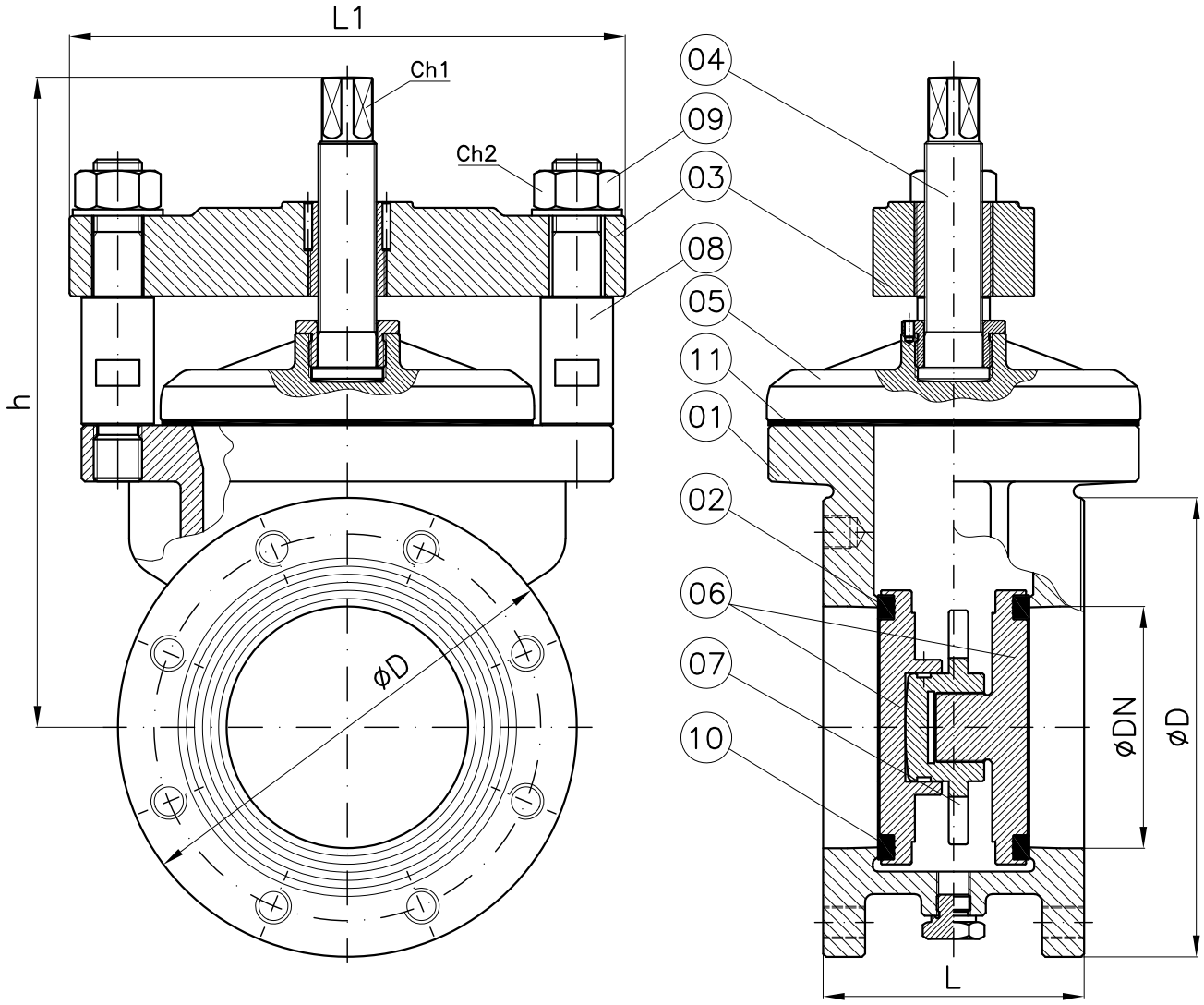

DN	50	65	80	100	125	150	200	250	300
D	165	185	200	220	250	285	340	405	460
h	300	320	320	335	380	405	460	510	555
L	154	154	154	162	162	162	162	200	200
L1	255	265	265	305	335	345	410	520	550
Ch1	19	19	19	22	27	27	27	27	30
Ch2	32	32	32	36	46	46	46	46	46
Weight (Kg)	29	34	37	48	63	74	120	180	273

Combinazione materiali standard – Standard materials Combination			
		A/A	CF8M/316
ITEM	DENOMINAZIONE DENOMINATION	MATERIALE MATERIAL	MATERIALE MATERIAL
01	Body	Cast steel GP240-GH UNI EN10213	Stainless steel AISI316L UNI EN10088
02	Body seat	Stainless steel AISI316 UNI EN10088	Integral
03	Bar	Cast steel GP240-GH UNI EN10213	Stainless steel AISI316L UNI EN10088
04	Stem	Stainless steel AISI420 UNI EN10088	Stainless steel AISI316L UNI EN10088
05	Cover	Cast steel GP240-GH UNI EN10213	Stainless steel AISI316L UNI EN10088
06	Disc	Cast steel GP240-GH UNI EN10213	Stainless steel AISI316L UNI EN10088
07	Bush	Aluminum-Bronze ASTM B148	Aluminum-Bronze ASTM B148
08	Column	Stainless steel AISI420 UNI EN10088	Stainless steel AISI304 UNI EN10088
09	Nut		Stainless steel AISI304 UNI EN10088
10	Disc seat	PTFE	PTFE
11	Gasket	PTFE	PTFE
Nota: Combinazioni materiali non standard a richiesta Note: Non standard materials combinations on request			

PROCEDURE

- Aprire il coperchio (5) svitando in senso antiorario lo stelo (4).
- Allentare il dado (9) e ruotare il traversino (3).
- Inserire l'otturatore (6).
- Girare la ghiera (7) (mezzo giro alla volta) con la chiave in dotazione fino ad ottenere la massima espansione delle 2 parti dell'otturatore contro le sedi del corpo valvola.
- Richiudere il coperchio (5).

OPERATION PROCEDURE

- *Open cover (5) unscrewing in anti-clockwise sense, the stem (4).*
- *Loose nut (9) and turn the bar (3).*
- *Insert disc (6).*
- *Turn the bush (7) (one half turn at a time) using the spanner (included in the shipment), until to reach the maximun expansion of the 2 sides of the disc against the body valve seats.*
- *Close again the cover (5).*

Valvole di soffiamento prese mare PN6-PN10DIN-PN10M.M.I.-PN16 in acciaio inox AISI316

Sea suction blowing valves NP6-NP10DIN-NP10M.M.I.-NP16 stainless steel AISI316

Tab.249

Conform to:
UNI EN1092
NM466801

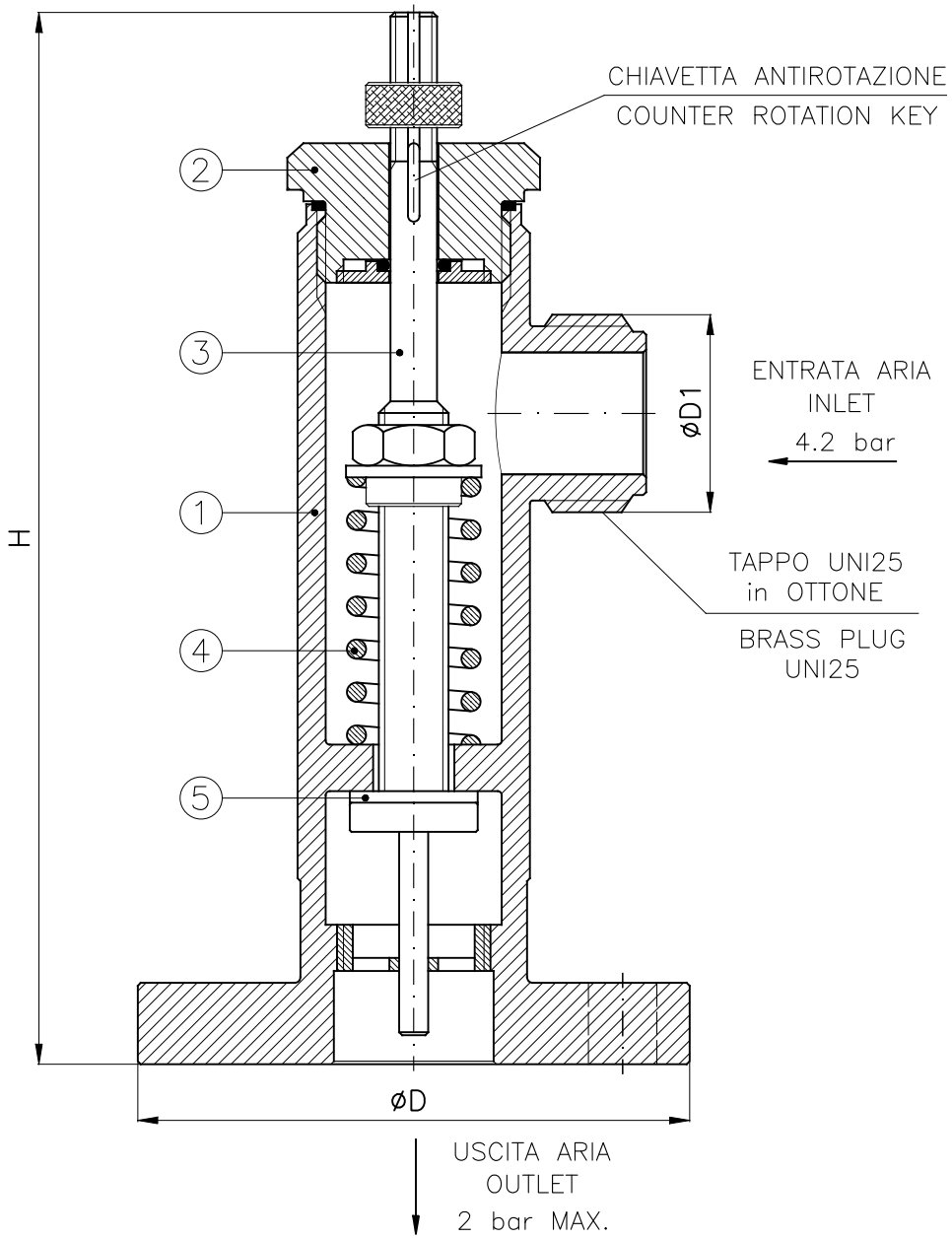

			PN6 – NP6				PN10 – NP10				PN10 M.M.I. – NP10 M.M.I.					PN16 – NP16				
DN	D1	H	D	K	f	Holes No. f	D	K	f	Holes No. f	a	D	K	f	Holes No. f	D	K	f	Holes No. f	Weight (Kg)
15	34x3M	180	80	55	11	4	95	65	14	4	72	90	65	14	4	95	65	14	4	2.1
25	34x3M	180	100	75	11	4	115	85	14	4	78	95	70	14	4	115	85	14	4	2.6
40	34x3M	180	130	100	14	4	150	110	18	4	85	110	85	14	4	150	110	18	4	3.6

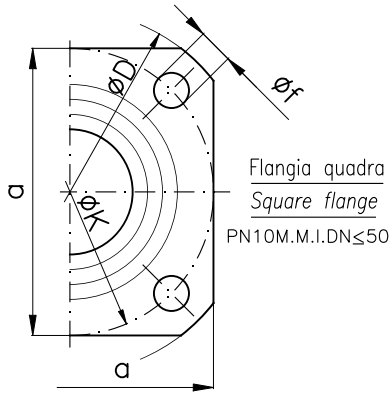

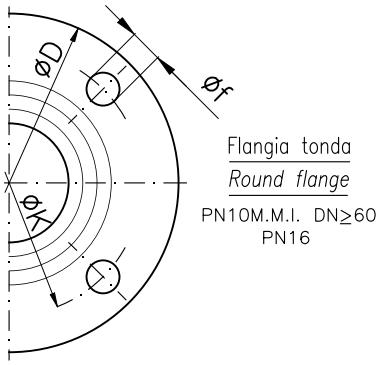

Combinazione materiali standard – Standard materials Combination

ITEM	DENOMINAZIONE DENOMINATION	MATERIALE MATERIAL
01	Body	Stainless steel AISI316 UNI EN10088
02	Bonnet	Stainless steel AISI316 UNI EN10088
03	Stem	Stainless steel AISI316 UNI EN10088
04	Spring	Stainless steel AISI316 UNI EN10088
05	Gasket	Viton

Nota: Combinazioni materiali non standard a richiesta
Note: Non standard materials combinations on request

Raccordi con attacchi a flangia per tubi flessibili PN10 M.M.I. (serie leggera)-PN6-16-40

Flanged connection for hose NP10 M.M.I. (light class) NP6-16-40

Tab.173

Conform to:
UNI EN1092
NI584751
NM584772

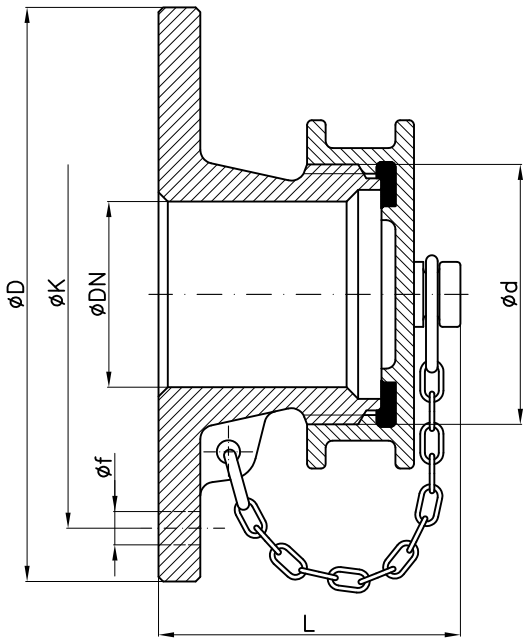

Esecuzione "A"
Execution "A"

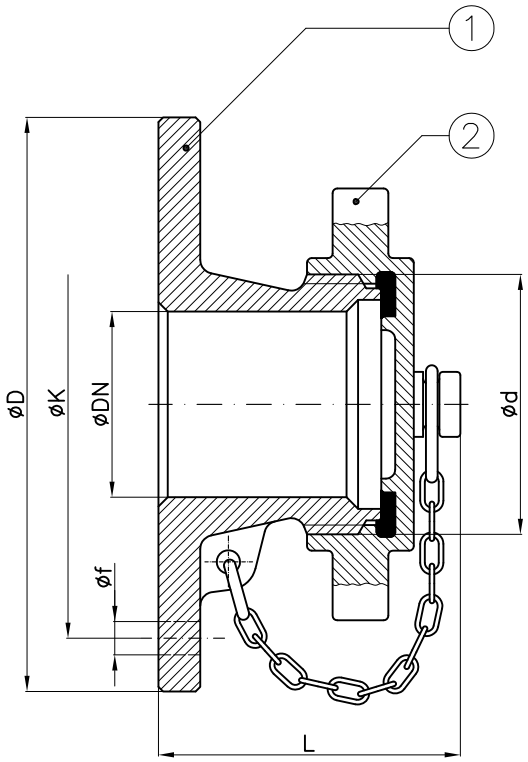

Esecuzione "B"
Execution "B"

DN	Esec.	d	L (~)	Weight (Kg)
25	A	34x3M	65	1.3
40	A	56x4M	65	2
60–65–70	B	85x6M	80	4
80	B	95x6M	85	6
90–100	B	115x6M	95	8
125	B	140x6M	110	12
150	B	165x6M	110	16

PN	DN	Tab. UNI – UNAV
6	25 ÷ 150	UNI 2870 – UNAV 8573
10	25 ÷ 140	UNI 2866 – UNAV 8569
16	25 ÷ 65	UNI 2869 – UNAV 8575
40	25 ÷ 60	UNI 2865 – UNAV 8571

	PN6 – NP6				PN10M.M.I.–NP10M.M.I.				PN16 – NP16				PN40 – NP40			
DN	D	K	f	Holes No. f	D	K	f	Holes No. f	D	K	f	Holes No. f	D	K	f	Holes No. f
25	100	75	11	4	95	70	14	4	115	85	14	4	115	85	14	4
40	130	100	14	4	110	85	14	4	150	110	18	4	150	110	18	4
60	–	–	–	–	135	110	14	6	–	–	–	–	–	–	–	–
65	160	130	14	4	–	–	–	–	185	145	18	4	185	145	18	8
70	–	–	–	–	140	115	14	6	–	–	–	–	–	–	–	–
80	190	150	18	4	155	130	14	8	200	160	18	8	200	160	18	8
90	–	–	–	–	170	145	14	8	–	–	–	–	–	–	–	–
100	210	170	18	4	175	150	14	8	220	180	18	8	235	190	22	8
125	240	200	18	8	200	175	14	12	250	210	18	8	270	220	26	8
150	165	225	18	8	230	205	14	12	285	240	22	8	300	250	26	8

Combinazione materiali standard – Standard materials Combination					
		A/O	316/O	B/O	GS/O
ITEM	DENOMINAZIONE DENOMINATION	MATERIALE MATERIAL	MATERIALE MATERIAL	MATERIALE MATERIAL	MATERIALE MATERIAL
01	Flange	Cast steel UNI EN10025 S275JR	Stainless steel AISI316 UNI EN10088	Bronze UNI EN1982 G–CuSn5Zn5Pb5	Nodular cast iron EN–GJS–400–15U UNI EN1563
02	Plug	Brass CW617N (OT58)	Brass CW617N (OT58)	Brass CW617N (OT58)	Brass CW617N (OT58)

Nota: Combinazioni materiali non standard a richiesta
Note: Non standard materials combinations on request

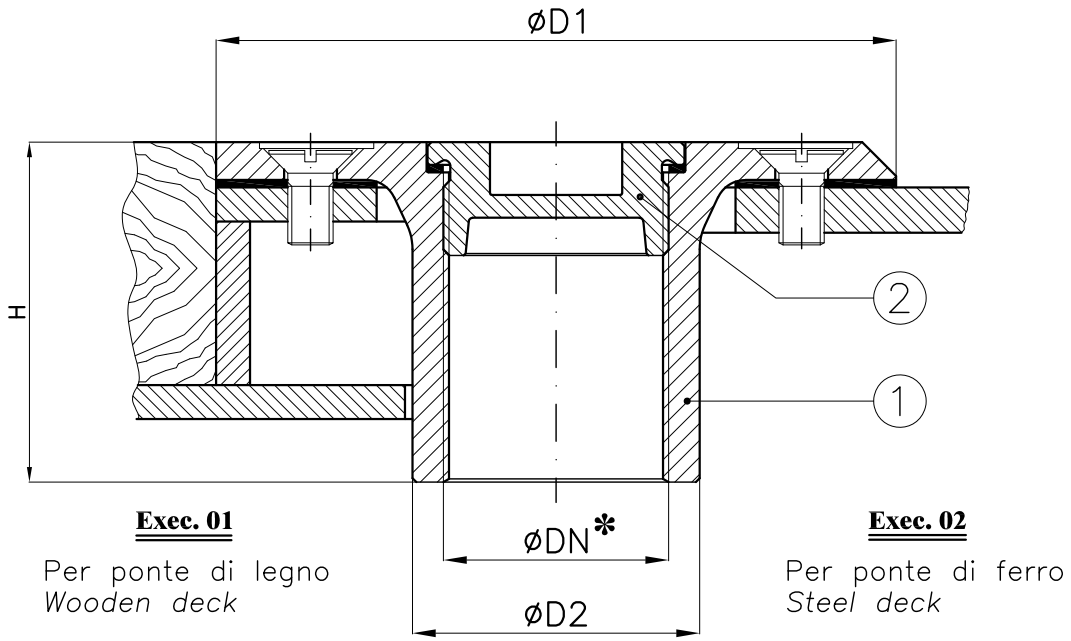

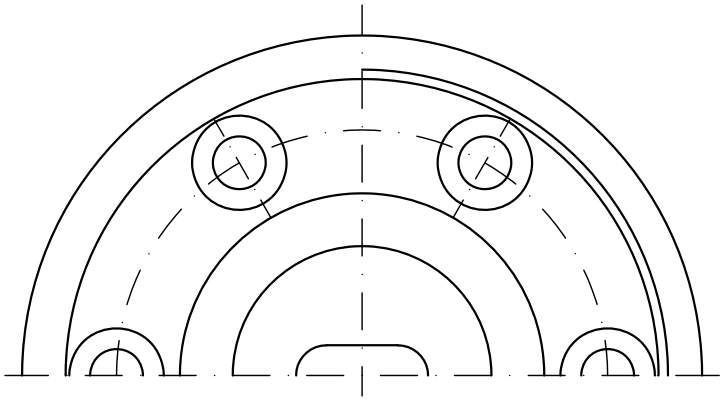

*: Filettatura GAS
*: *BSPP threaded*

DN	D1	D2	H	Weight (Kg)
1"1/2	165	60	75	3
2"	180	76	90	4.5
2"1/2	205	94	100	6.5

Combinazione materiali standard – Standard materials Combination			
		A/O	B/O
ITEM	DENOMINAZIONE DENOMINATION	MATERIALE MATERIAL	MATERIALE MATERIAL
01	Body	Cast steel GP240-GH UNI EN10213	Bronze UNI EN1982 G-CuSn5Zn5Pb5
02	Plug	Brass CW617 (OT58)	Brass CW617 (OT58)
Nota: Combinazioni materiali non standard a richiesta Note: Non standard materials combinations on request			

Targhetta non inclusa nella fornitura
Plate not included in supply

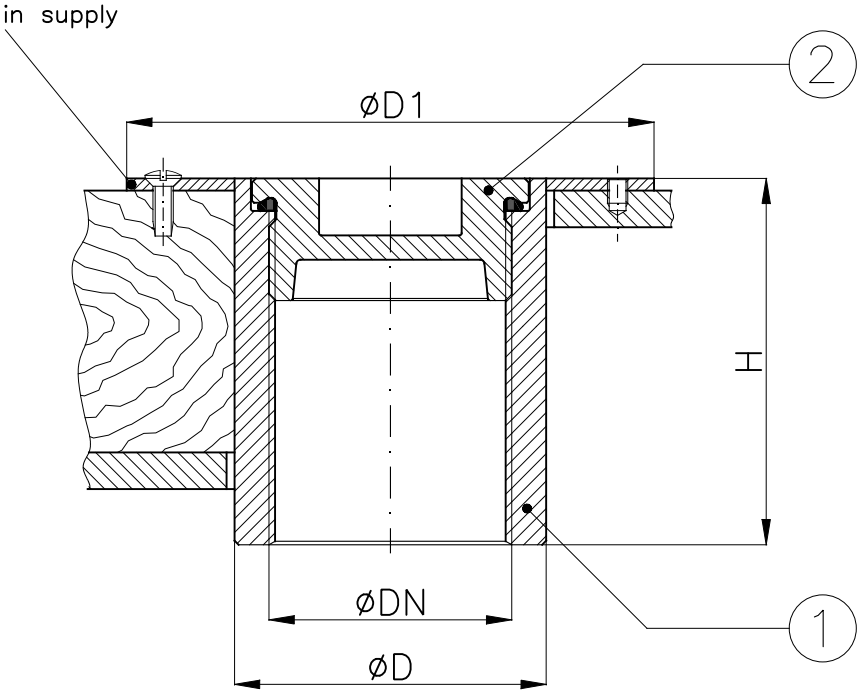

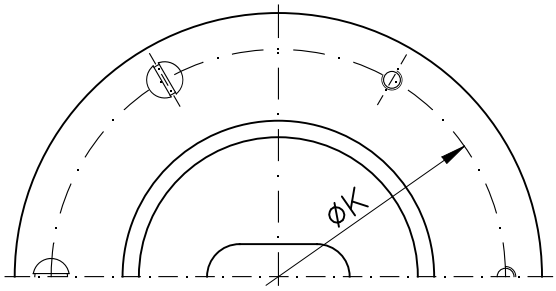

✻: Filettatura GAS
✻: *BSPP threaded*

DN		D	D1	H	K	Weight (Kg)
40	1"1/2Gas	70	114	90	102	2.5
50	2"Gas	83	134	90	120	2.9
65	2"1/2Gas	100	156	90	143	3.6

Combinazione materiali standard – Standard materials Combination			
		A/O	316/O
ITEM	DENOMINAZIONE DENOMINATION	MATERIALE MATERIAL	MATERIALE MATERIAL
01	Body	Carbon steel UNI EN10025 S275JR	Stainless steel AISI316 UNI EN10088
02	Plug	Brass CW617N (OT58)	Brass CW617N (OT58)
Nota: Combinazioni materiali non standard a richiesta Note: Non standard materials combinations on request			

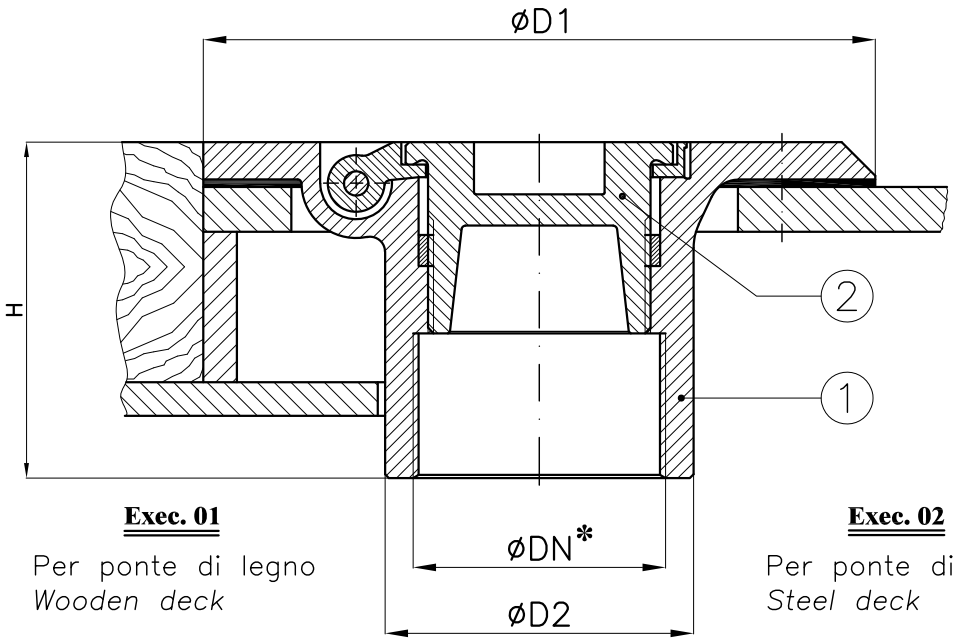

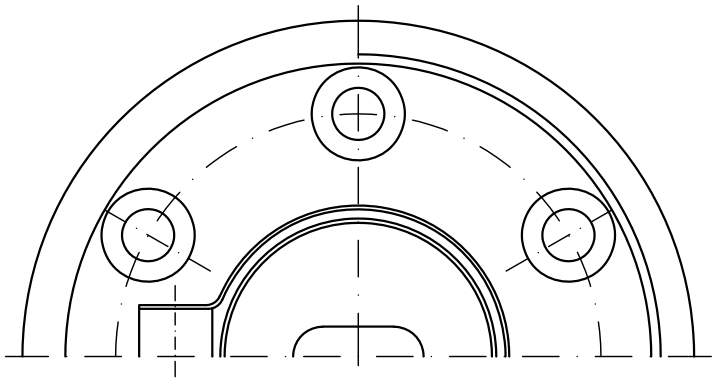

*: Filettatura GAS
*: *BSPP threaded*

DN	D1	D2	H	Weight (Kg)
1"1/2	165	60	75	3
2"	180	76	90	4.5
2"1/2	205	94	100	6.5

Combinazione materiali standard – Standard materials Combination			
		A/O	B/O
ITEM	DENOMINAZIONE DENOMINATION	MATERIALE MATERIAL	MATERIALE MATERIAL
01	Body	Cast steel GP240-GH UNI EN10213	Bronze UNI EN1982 G-CuSn5Zn5Pb5
02	Plug	Brass CW617 (OT58)	Brass CW617 (OT58)
Nota: Combinazioni materiali non standard a richiesta Note: Non standard materials combinations on request			

Tappi per sonda con attacco a saldare UNAV 4372.1
Screw cap for filling for sounding pipes UNAV 4372.1

Tab.177

Conform to:
NU584411

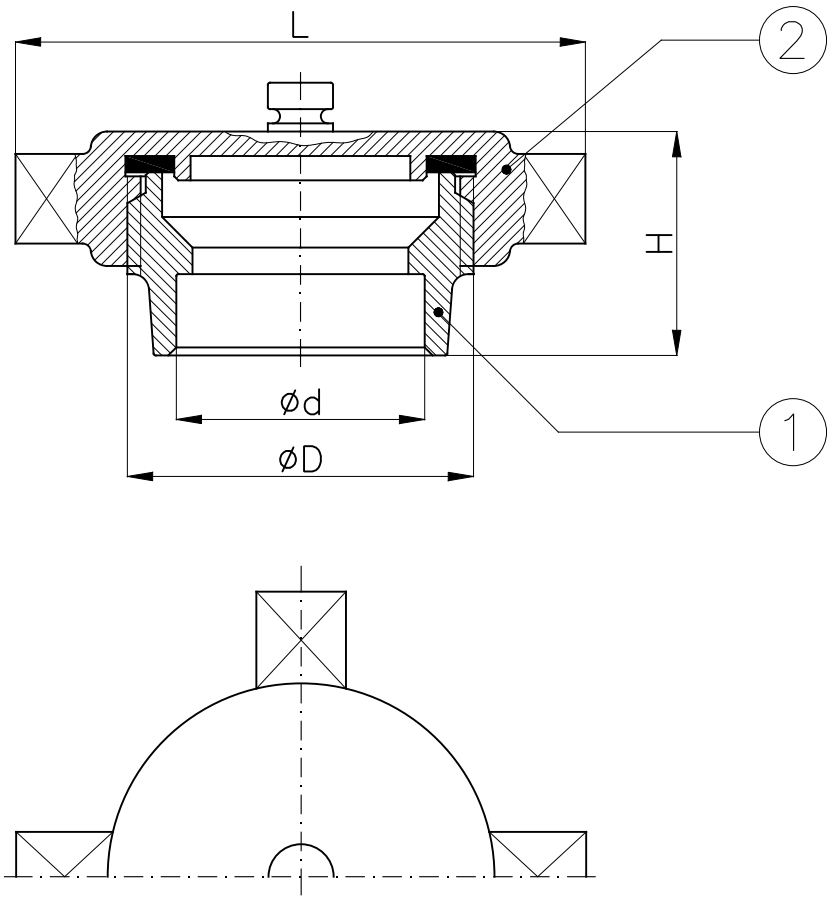

Esecuzione a richiesta con ød filettato Gas (BSPP)
On request ød BSPP threaded

DN		D	d	H	L	Weight (Kg)
25	1"	M56x4	34	50	90	0.5
40	1"1/2	M70x4	49	60	115	1.6
50	2"	M85x6	61	65	140	2.3

Combinazione materiali standard – Standard materials Combination			
		A/O	316/O
ITEM	DENOMINAZIONE DENOMINATION	MATERIALE MATERIAL	MATERIALE MATERIAL
01	Body	Carbon steel UNI EN10025 S275JR	Stainless steel AISI316 UNI EN10088
02	Plug	Brass CW617N (OT58)	Brass CW617N (OT58)
Nota: Combinazioni materiali non standard a richiesta Note: Non standard materials combinations on request			

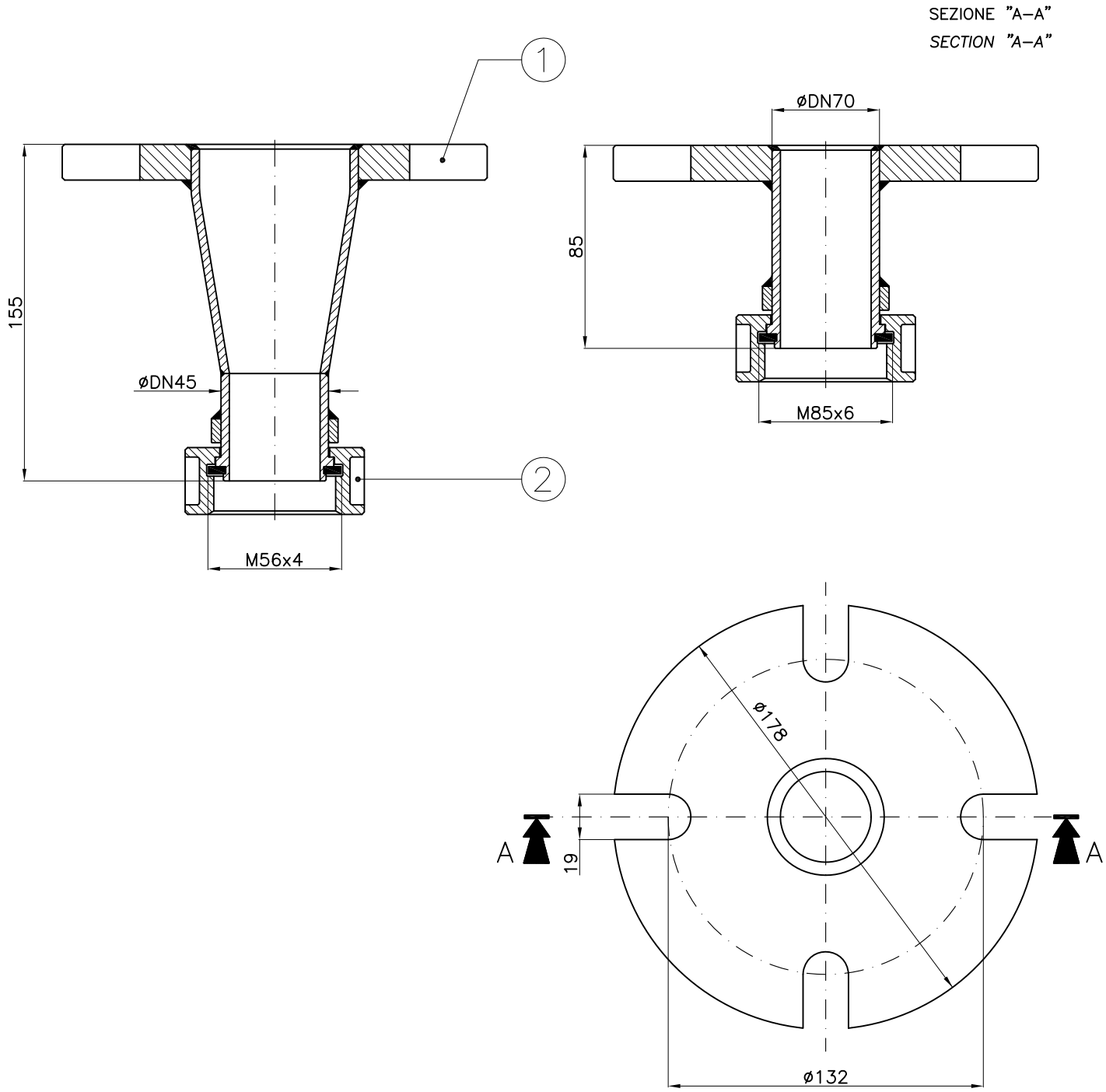

Combinazione materiali standard – Standard materials Combination			
		A/O	316/O
ITEM	DENOMINAZIONE DENOMINATION	MATERIALE MATERIAL	MATERIALE MATERIAL
01	Flange	Carbon steel UNI EN10025 S275JR	Stainless steel AISI316 UNI EN10088
02	Plug	Brass CW617N (OT58)	Brass CW617N (OT58)
Nota: Combinazioni materiali non standard a richiesta Note: Non standard materials combinations on request			

Boccola da sonda da saldare a ponte
Sounding bush for welding to deck

NI 584432

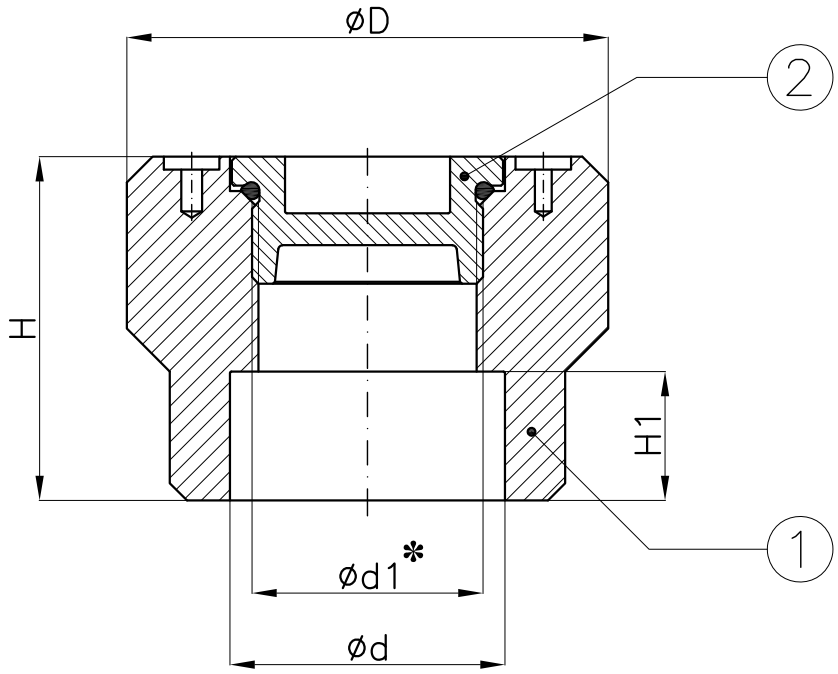

Targhetta non inclusa nella fornitura
Plate not included in supply

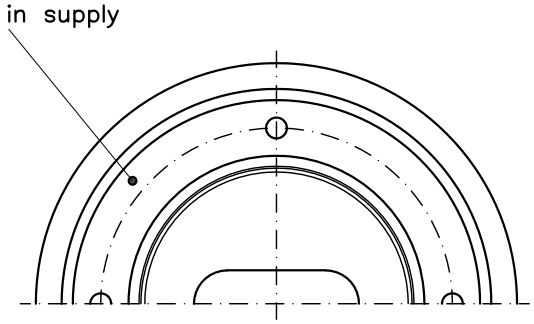

*: Filettatura GAS
*: *BSPP threaded*

DN		D	d	d1 (Gas)	H	H1	Weight (Kg)
40	1"1/2Gas	105	50	1"3/8	80	30	3.7
50	2"Gas	115	64	1"3/4	80	30	4.2

Combinazione materiali standard – Standard materials Combination			
		A/O	316/O
ITEM	DENOMINAZIONE DENOMINATION	MATERIALE MATERIAL	MATERIALE MATERIAL
01	Body	Carbon steel UNI EN10025 S355JR	Stainless steel AISI316 UNI EN10088
02	Plug	Brass CW617N (OT58)	Brass CW617N (OT58)
Nota: Combinazioni materiali non standard a richiesta Note: Non standard materials combinations on request			

Art. B12/A

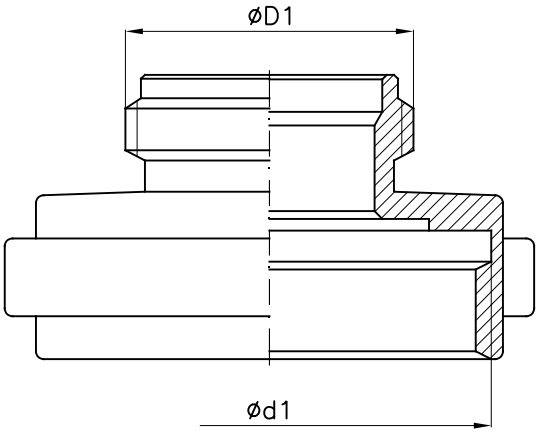

Tipo – Type	D1	d1
M25xF45 S/E	M34x3	M56x4
M45xF25 C/E	M56x4	M34x3
M45xF70 S/E	M56x4	M85x6
M70xF45 S/E	M85x6	M56x4
M70xF80 T/B	M85x6	M95x6
M70xF100 T/B	M85x6	M115x6
M70xF125 T/B	M85x6	M140x6
M80xF100 T/B	M95x6	M115x6
M80xF125 T/B	M95x6	M140x6
M100xF125 T/B	M115x6	M140x6
M125xF100 T/B	M140x6	M115x6

S/E: Senza esagono C/E: Con esagono

T/B: Con naselli

Art. B12/B

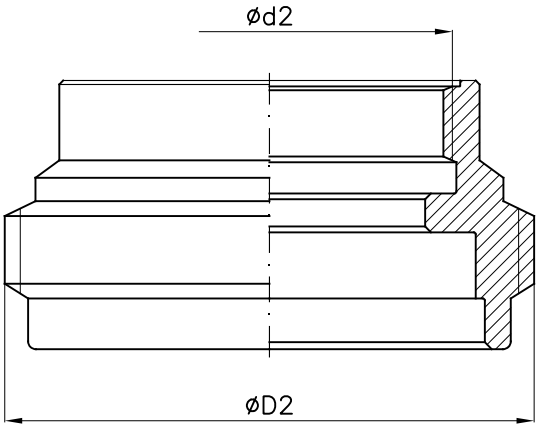

Tipo – Type	D2	d2
M25xF1" C/E	M34x3	1"Gas
M45xF1" C/E	M56x4	1"Gas
M45xF1"1/4 C/E	M56x4	1"1/4Gas
M45xF1"1/2 S/E	M56x4	1"1/2Gas
M45xF2" S/E	M56x4	2"Gas
M70xF2" S/E	M85x6	2"Gas
M70xF2"1/2 S/E	M85x6	2"1/2Gas
M70xF3" S/E	M85x6	3"Gas
M80xF3" S/E	M95x6	3"Gas
M100xF4" T/B	M115x6	4"Gas
M125xF4" T/B	M140x6	4"Gas
M125xF5" S/E	M140x6	5"Gas

S/E: Senza esagono C/E: Con esagono

T/B: Con naselli

Art. B12/C

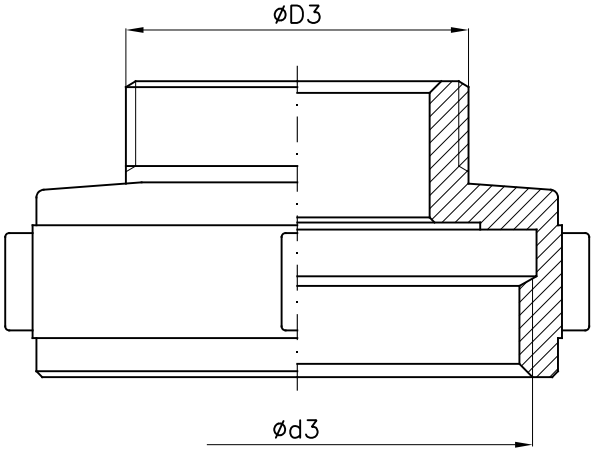

Tipo – Type	D3	d3
F25xM3/4" C/E	3/4"Gas	M34x3
F25xM1" S/E	1"Gas	M34x3
F45xM1"1/4 S/E	1"1/4Gas	M56x4
F45xM1"1/2 C/E	1"1/2Gas	M56x4
F45xM2" S/E	2"Gas	M56x4
F70xM2" S/E	2"Gas	M85x6
F70xM2"1/2 S/E	2"1/2Gas	M85x6

S/E: Senza esagono C/E: Con esagono

T/B: Con naselli

Art. B13/A

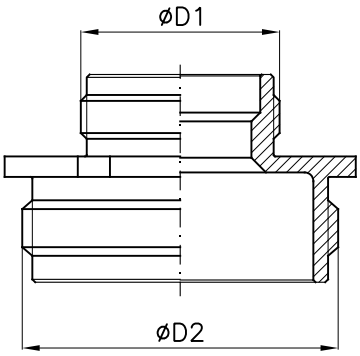

Tipo – Type	D1	D2
M25xM25 C/E	M34x3	M34x3
M45xM25 C/E	M34x3	M56x4
M45xM45 S/E	M56x4	M56x4
M70xM45 C/E	M56x4	M85x6
M70xM70 S/E	M85x6	M85x6
M80xM80 S/E	M95x6	M95x6
M100xM100 S/E	M115x6	M115x6
M125xM125 C/E	M140x6	M140x6

S/E: Senza esagono
C/E: Con esagono

Art. B13/B

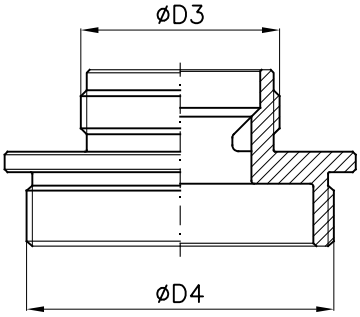

Tipo – Type	D3	D4
M25xM3/4" C/E	M34x3	3/4"Gas
M25xM1" C/E	M34x3	1"Gas
M25xM1"1/4 C/E	M34x3	1"1/4Gas
M45xM1" C/E	M56x4	1"Gas
M45xM1"1/4 S/E	M56x4	1"1/4Gas
M45xM1"1/2 S/E	M56x4	1"1/2Gas
M45xM2" S/E	M56x4	2"Gas
M45xM2"1/2 S/E	M56x4	2"1/2Gas
M70xM2" S/E	M85x6	2"Gas
M70xM2"1/2 S/E	M85x6	2"1/2Gas
M70xM3" C/E	M85x6	3"Gas
M70xM3"1/2 S/E	M85x6	3"1/2Gas
M70xM4" S/E	M85x6	4"Gas
M80xM2"1/2 C/E	M95x6	2"1/2Gas
M80xM3" C/E	M95x6	3"Gas
M100xM3"1/2 S/E	M115x6	3"1/2Gas
M100xM4" S/E	M115x6	4"Gas
M125xM4" C/E	M140x6	4"Gas
M125xM5" C/E	M140x6	5"Gas

S/E: Senza esagono
C/E: Con esagono

Art. B17/A

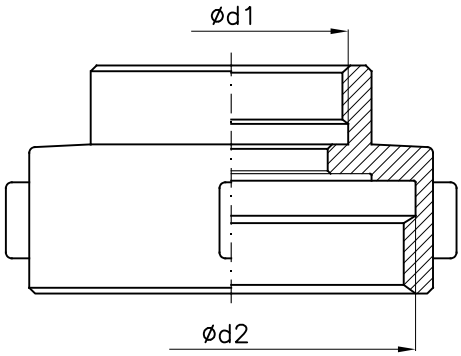

Tipo – Type	d1	d2
F45xF25 S/E	M34x3	M56x4
F70xF45 S/E	M56x4	M85x6
F100xF70 T/B	M85x6	M115x6
F125xF70 T/B	M85x6	M140x6

S/E: Senza esagono
C/E: Con esagono
T/B: Con naselli

Art. B17/B

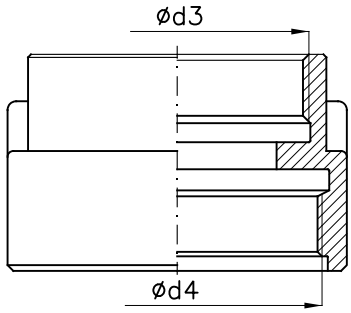

Tipo – Type	d3	d4
F25xF1" C/E	M34x3	1"Gas
F45xF1"1/4 S/E	M56x4	1"1/4Gas
F45xF1"1/2 S/E	M56x4	1"1/2Gas
F45xF2" S/E	M56x4	2"Gas
F70xF1"1/2 S/E	M85x6	1"1/2Gas
F70xF2" S/E	M85x6	2"Gas
F70xF2"1/2 S/E	M85x6	2"1/2Gas
F70xF3" S/E	M85x6	3"Gas

S/E: Senza esagono
C/E: Con esagono

Art. B14/A

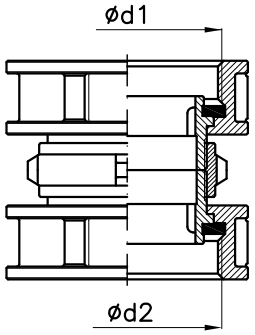

Tipo – Type	d1	d2
FG25xFG25	M34x3	M34x3
FG45xF25	M34x3	M56x4
FG45xFG45	M56x4	M56x4
FG45xFG70	M85x6	M56x4
FG70xFG70	M85x6	M85x6
FG80xFG70	M85x6	M95x6
FG80xFG80	M85x6	M95x6
FG100xFG70	M85x6	M115x6
FG100xFG80	M95x6	M115x6
FG100xFG100	M115x6	M115x6
FG125xFG125	M140x6	M140x6

Art. B14/B

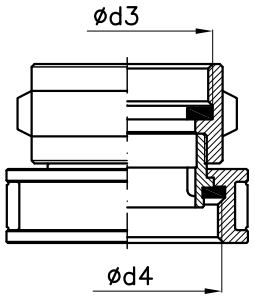

Tipo – Type	d3	d4
FG25xF1"	1"Gas	M34x3
FG45xF1"1/4	1"1/4Gas	M56x4
FG45xF1"1/2	1"1/2Gas	M56x4
FG45xF2"	2"Gas	M56x4
FG70xF2"	2"Gas	M85x6
FG70xF2"1/2	2"1/2Gas	M85x6
FG70xF3"	3"Gas	M85x6
FG80xF2"1/2	2"1/2Gas	M95x6
FG80xF3"	3"Gas	M95x6
FG100xF4"	4"Gas	M115x6
FG125xF4"	4"Gas	M140x6
FG125xF5"	5"Gas	M140x6

Art. B14/C

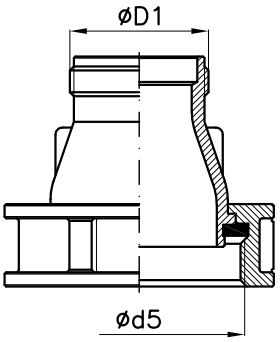

Tipo – Type	D1	d5
FG45xM25	M34x3	M56x4
FG45xM70	M85x3	M56x4
FG70xM45	M56x4	M85x6
FG70xM100	M115x6	M85x6
FG80xM70	M85x6	M95x6
FG100xM70	M85x6	M115x6
FG100xM80	M95x6	M115x6
FG100xM125	M140x6	M115x6

Art. B14/D

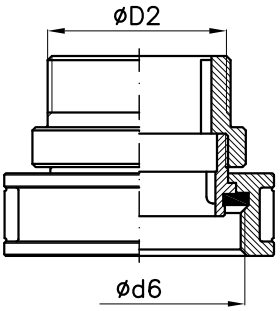

Tipo – Type	D2	d6
FG25xM3/4"	3/4"Gas	M34x3
FG25xM1"	1"Gas	M34x3
FG45xM1"	1"Gas	M56x4
FG45xM1"1/4	1"1/4Gas	M56x4
FG45xM1"1/2	1"1/2Gas	M56x4
FG45xM2"	2"Gas	M56x4
FG70xM2"	2"Gas	M85x6
FG70xM2"1/2	2"1/2Gas	M85x6
FG70xM3"	3"Gas	M85x6
FG80xM2"1/2	2"1/2Gas	M95x6
FG80xM3"	3"Gas	M95x6
FG100xM4"	4"Gas	M115x6
FG125xM4"	4"Gas	M140x6
FG125xM5"	5"Gas	M140x6

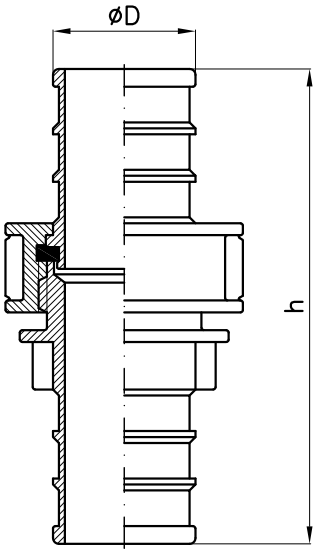

Art. B20

Tipo – Type	D	h
"A" export DN25	25	102
"A" pesante DN25	25	109
"A" export DN45	45	109
"A" pesante DN45 UNI804	45	151
"A" normale DN70	70	158
"A" pesante DN70 UNI804	70	194
"A" speciale	63	–

Art. B21

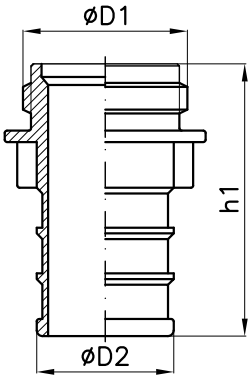

Tipo – Type	D1	D2	h1
"A" export DN25	M34x3	25	62
"A" pesante DN25	M34x3	25	71
"A" export DN45	M56x4	45	65
"A" pesante DN45 UNI805	M56x4	45	92
"A" normale DN70	M85x6	70	93
"A" pesante DN70 UNI805	M85x6	70	119
"A" speciale	M85x6	63	–

Art. B22

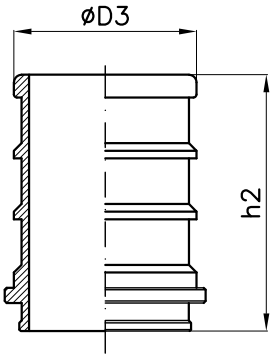

Tipo – Type	D3	h2
"A" export DN25	25	42
"A" pesante DN25	25	42
"A" export DN45	45	42
"A" pesante DN45 UNI807	45	63
"A" normale DN70	70	71
"A" pesante DN70 UNI807	70	81
"A" speciale	63	–

Art. B24

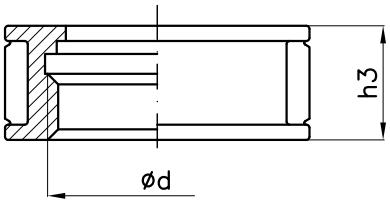

Tipo – Type	d	h3
"A" export DN25	M34x3	22
"A" pesante DN25	M34x3	24
"A" export DN45	M56x4	22
"A" pesante DN45 UNI808	M56x4	28
"A" normale DN70	M85x6	29
"A" pesante DN70 UNI808	M85x6	32

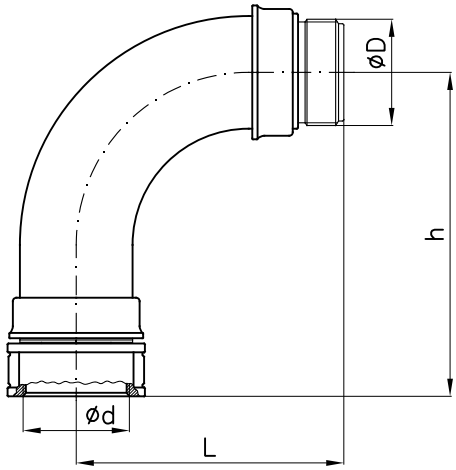

Art. B29

Tipo – Type	D	d	L	h
M45xFG45	M56x4	M56x4	162	167
M70xFG70	M85x6	M85x6	227	212

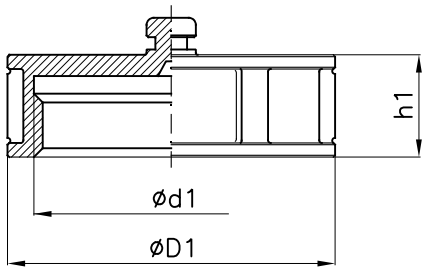

Art. B9/A

Tipo – Type	D1	d1	h1
UNI25 normale	48	M34x3	19
UNI45 normale	67	M56x4	23
UNI45 a norma UNI7421	75	M56x4	23
UNI70 normale	100	M85x6	29
UNI70 a norma UNI7421	105	M85x6	33

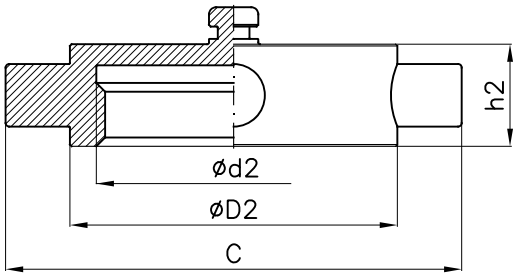

Art. B10

Tipo – Type	C	D2	d2	h2
UNI70 normale	139	95	M85x6	33
UNI80 normale	149	105	M95x6	33
UNI100 a norma UNI7421	174	126	M115x6	37
UNI125 normale	200	153	M140x6	37
UNI150 a norma UNI7421	227	180	M165x6	39

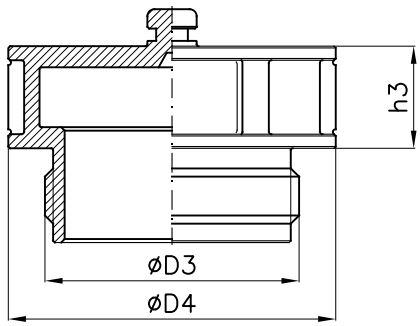

Art. B11

Tipo – Type	D3	D4	h3
UNI45	M56x4	65	26
UNI70	M85x6	104	61

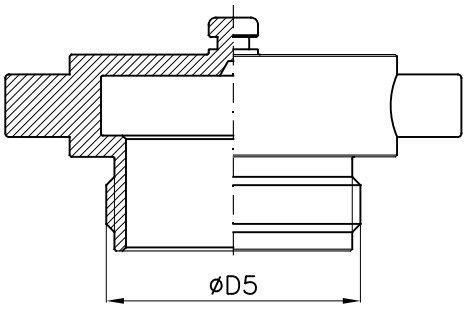

Art. B49

Tipo – Type	D5
UNI70 Tipo pesante	M85x6
UNI80 Tipo pesante	M95x6
UNI100 Tipo pesante	M115x6
UNI125 Tipo pesante	M140x6

Raccordo storz in lega leggera - Light alloy storz delivery hose coupling — **Art.B43**
Tappo storz in lega leggera - Light alloy storz blank cap — **Art.B44**
Riduzione storz a maschio GAS in lega leggera - Storz to BSP male adapter in light alloy — **Art.B91**
Riduzione storz a femmina GAS in lega leggera - Storz to BSP female adapter in light alloy — **Art.B92**

Art. B43

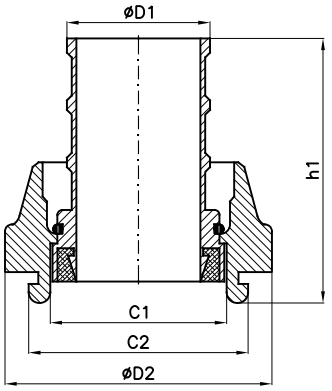

Tipo – Type	C1	C2	D1	D2	h1
Storz 25, PG25	31	45	25	55	62
Storz 32, PG32	44	59	32	68	81
Storz 38, PG38	52	68	38	78	99
Storz 52, PG45	66	84	45	98	100
Storz 52, PG52	66	84	52	98	100
Storz 65, PG65	81	103	65	118	111
Storz 75, PG70	89	111	70	126	137
Storz 75, PG75	89	111	75	126	137
Storz 100, PG100	115	139	100	155	163
Storz 110, PG100	133	161	100	182	184

Art. B44

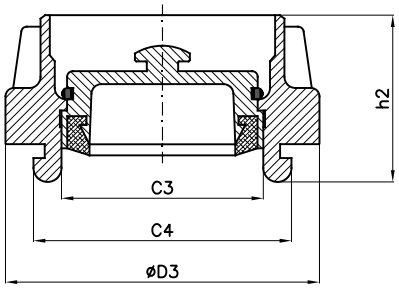

Tipo – Type	C3	C4	D3	h2
Storz 25	31	45	55	37
Storz 38	52	68	78	43
Storz 52	66	84	98	54
Storz 65	81	103	118	48
Storz 75	89	111	126	58
Storz 100	115	139	155	62
Storz 110	133	161	182	68

Art. B91

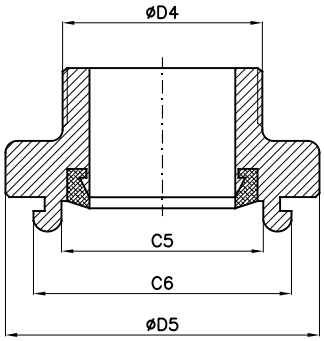

Tipo – Type	C5	C6	D4	D5
Storz 25xM3/4"Gas	31	45	3/4"Gas	55
Storz 25xM1"Gas	31	45	1"Gas	55
Storz 32xM1"1/4Gas	44	59	1"1/4"Gas	68
Storz 38xM1"1/2Gas	52	68	1"1/2Gas	78
Storz 52xM1"1/2Gas	66	84	1"1/2Gas	98
Storz 52x2"Gas	66	84	2"Gas	98
Storz 52xM2"1/2Gas	66	84	2"1/2Gas	98
Storz 65xM2"1/2Gas	81	103	2"1/2Gas	118
Storz 75xM2"Gas	89	111	2"Gas	126
Storz 75xM2"1/2Gas	89	111	2"1/2Gas	126
Storz 52xM1"1/4Gas	66	84	1"1/4"Gas	98
Storz 65xM2"Gas	81	103	2"Gas	118
Storz 75xM3"Gas	89	111	3"Gas	126
Storz 100xM4"Gas	115	139	4"Gas	155
Storz 110xM4"Gas	133	161	4"Gas	182
Storz 150xM6"Gas	160	192	6"Gas	215
Storz 52xUNI DN45 M	66	84	M56x4	98
Storz 75xUNI DN70 M	89	111	M85x6	126
Storz 52x storz 65	66/81	84/103	–	98/118
Storz 52x storz 75	66/89	84/111	–	98/126
Storz 75x storz 100	89/115	111/139	–	126/155

Art. B92

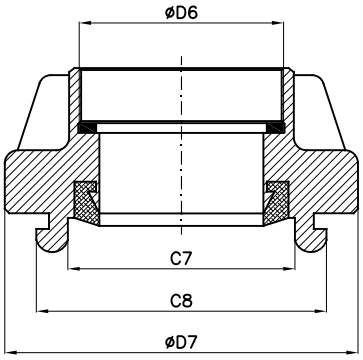

Tipo – Type	C7	C8	D6	D7
Storz 25xF1/2"Gas	31	45	1/2"Gas	55
Storz 25xF3/4"Gas	31	45	3/4"Gas	55
Storz 25xF1"Gas	31	45	1"Gas	55
Storz 32xF1"1/4Gas	44	59	1"1/4"Gas	68
Storz 38xF1"1/2Gas	52	68	1"1/2Gas	78
Storz 52xF1"1/2Gas	66	84	1"1/2Gas	98
Storz 52xF2"Gas	66	84	2"Gas	98
Storz 52xF2"1/2Gas	66	84	2"1/2Gas	98
Storz 65xF2"1/2Gas	81	103	2"1/2Gas	118
Storz 75xF2"Gas	89	111	2"Gas	126
Storz 75xF2"1/2Gas	89	111	2"1/2Gas	126
Storz 65xF2"Gas	81	103	2"Gas	118
Storz 75xF3"Gas	89	111	3"Gas	126
Storz 100xF4"Gas	115	139	4"Gas	155
Storz 110xF4"Gas	133	161	4"Gas	182
Storz 150xF6"Gas	160	192	6"Gas	215
Storz 52xUNI DN45 F	66	84	M56x4	98
Storz 75xUNI DN70 F	89	111	M85x6	126

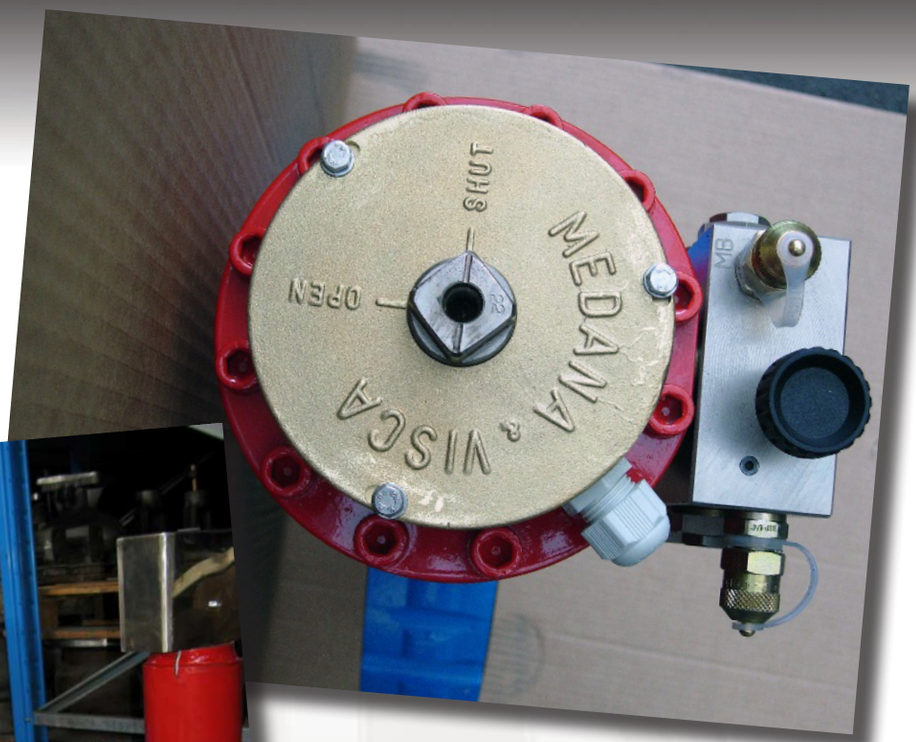

www.medanaevisca.it

Attuatore idraulico lineare a doppio effetto
Double acting hydraulic linear actuator

Tab. H 190 ÷ 197

Simbolo Idraulico / Hydraulic symbol

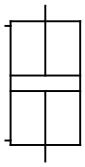

Marino / Marine standard

Pressione di esercizio / Working pressure	min	40 bar
	max	160 bar
Temperatura di esercizio / Working temperature		−20°C to 80°C

POS.	PARTICOLARI – PARTS	MATERIALE – MATERIALS
1	FLANGIA FRONTALE – FRONT FLANGE	ACCIAIO UNI C40/BRONZO – STEEL UNI C40/BRONZE
2	RASAMENTO – BACK ROD	ACCIAIO – STEEL UNI 9SMnPb28
3	ANELLO ELASTICO – SNAP RING	ACCIAIO INOSSIDABILE – STAINLESS STEEL AISI 316 TRATT. TERMIC.
4	COLLARE – COLLAR	ACCIAIO – STEEL Fe52
5	TESTATA INTERNA – INNER HEAD FLANGE	GHISA – CAST IRON G25 UNI EN 1561
6	CAMICIA ATTUATORE – HOUSING	ACCIAIO – STEEL Fe52.2
7	STELO – STEM	ACCIAIO – STEEL AISI 316 CROM.
8	PISTONE – PISTON	ACCIAIO – STEEL UNI9SMnPb28
9	FLANGIA TESTATA – HEAD FLANGE	ACCIAIO INOSSIDABILE – STAINLESS STEEL UNI C40
10	STELO – STEM	ACCIAIO – STEEL UNI C40 CROM.
	GUARNIZIONI – SEALS	POLIURETANO, BUNA N, TEFLON, VITON – POLIURETHANE, BUNA N, TEFLON, VITON
	FINITURA ESTERNA – COATING	ZINCATURA ELETTROLITICA – ELECTROLYTIC GALVANIZATION

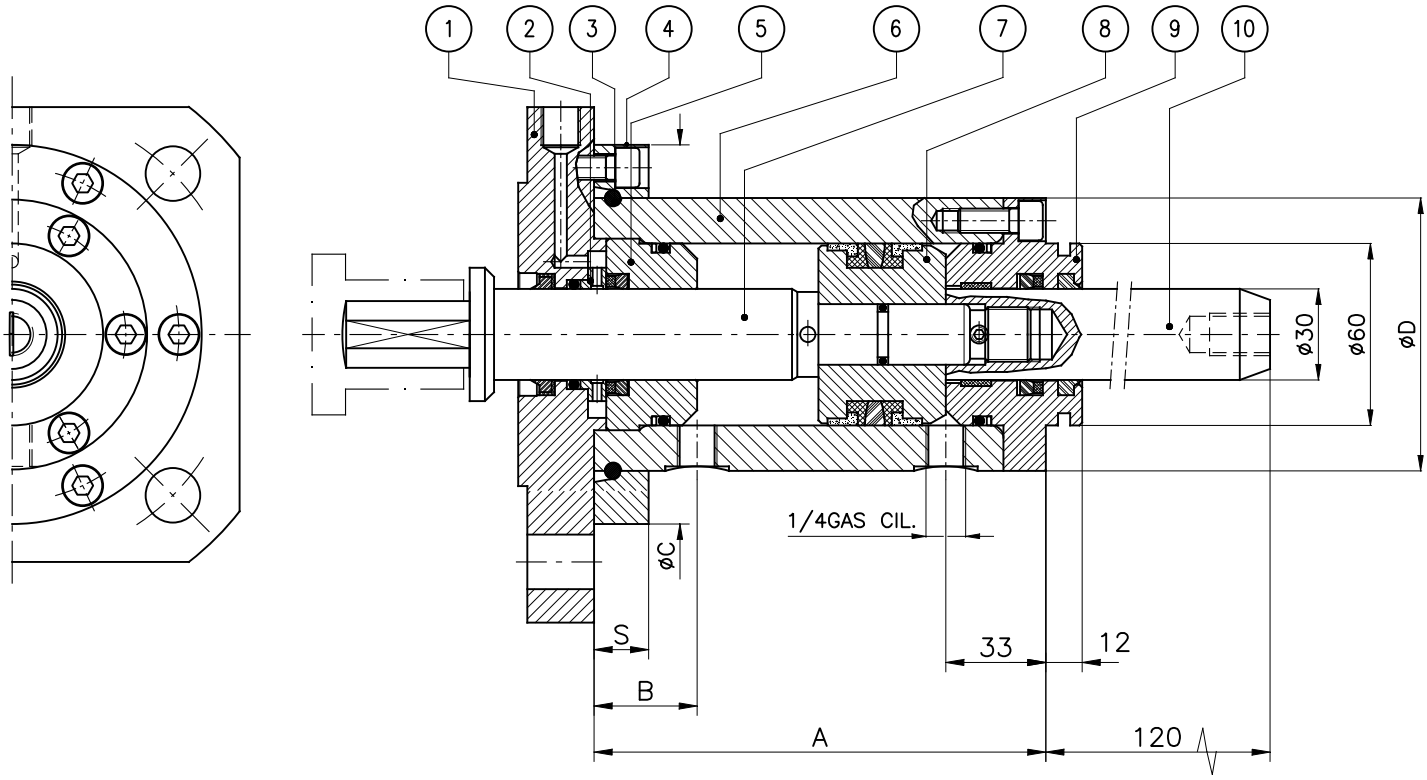

Approval

DNV / Lloyd's Register / RINA

DIS. – DWG	ALESAGGIO BORE	ASTA ROD	CORSA STROKE	A	B	C	D	S	V (cm³)
H.190/0040	60	30/30	40	149	34	125	90	18	84,8
H.192/0050	80	30/30	50	177	44	155	110	20	216
H.194/0065	100	40/30	65	197	44	175	130	20	464
H.195/0080	125	40/30	80	222	54	200	154	20	925
H.196/0090	150	50/30	90	242	54	225	180	20	1414
H.197/0100	180	50/30	100	252	54	260	210	20	2474

Attuatore idraulico rotante a semplice effetto
Single acting hydraulic rotary actuator

Tab.ARS

Conform to:	Min/Max pressure (bar)	Working Temp. (°C)	Approval
UNI EN ISO5211/DIN 3337	135 ÷ 160	-20 ÷ 80	DNV / Lloyd's Register / RINA

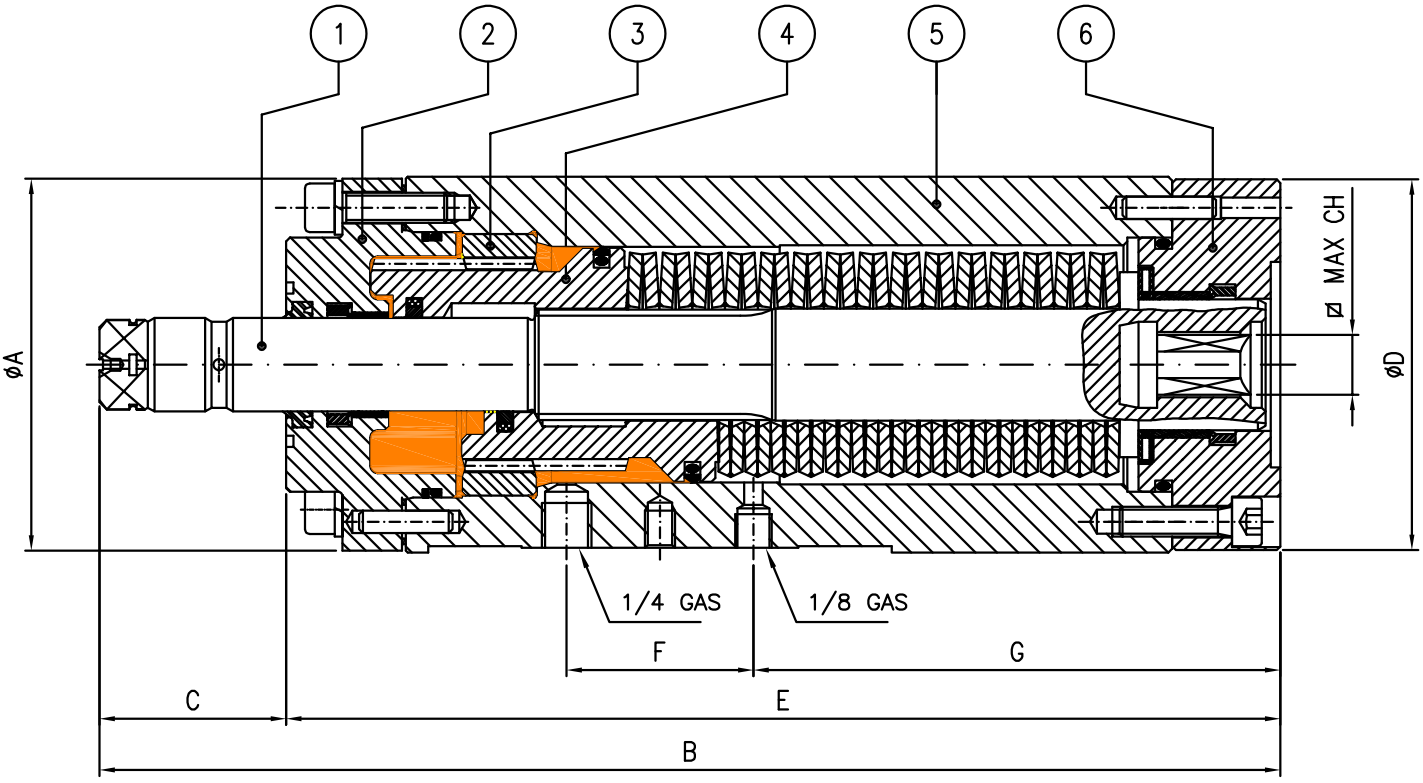

AREE IN PRESSIONE
PRESSURE AREAS

POS.	PARTICOLARI - *PARTS*	MATERIALE - *MATERIALS*
1	ALBERO - *SHAFT*	ACCIAIO INOX - *STAINLESS STEEL AISI 420*
2	FONDELLO POSTERIORE - *CAP*	ACCIAIO - *STEEL UNI C40*
3	BOCCOLA DENTATA- *TEETH BUSHING*	GHISA SFEROIDALE - *NODULAR CAST IRON EN-GJS-500-7C UNI EN 1563:2012*
4	PISTONE - *PISTON*	GHISA SFEROIDALE - *NODULAR CAST IRON EN-GJS-500-7C UNI EN 1563:2012*
5	CAMICIA ATTUATORE - *HOUSING*	ACCIAIO - *STEEL Fe 52.2*
6	FLANGIA FRONTALE - *FRONT FLANGE*	ACCIAIO - *STEEL UNI C40*
	GUARNIZIONI - *SEALS*	POLIURETANO, BUNA N, TEFLON - *POLIURETHANE, NBR, TEFLON*
	FINITURA ESTERNA - *COATING*	VERNIC. EPOSSIDICA - *EPOXIDE PAINTING*

MOD. *TYPE*	DIS. *DWG*	A	B	C	D	E	F	G	CH (MAX)	V (cm³)	T (Nm) FINE AP/CH END O/C	Weight (Kg)
ARS 9	RS.10A/E18..	100	316	50	100	266	50	141	18	64	96	13
ARS 19	RS.13A/E18..	114	372	50	114	322	50	195	18	120	190	16

Attuatore idraulico rotante a semplice effetto
Single acting hydraulic rotary actuator

Tab.ARS

Conform to:	Min/Max pressure (bar)	Working Temp. (°C)	Approval
UNI EN ISO5211/DIN 3337	135 ⋮ 160	-20 ⋮ 80	DNV / Lloyd's Register / RINA

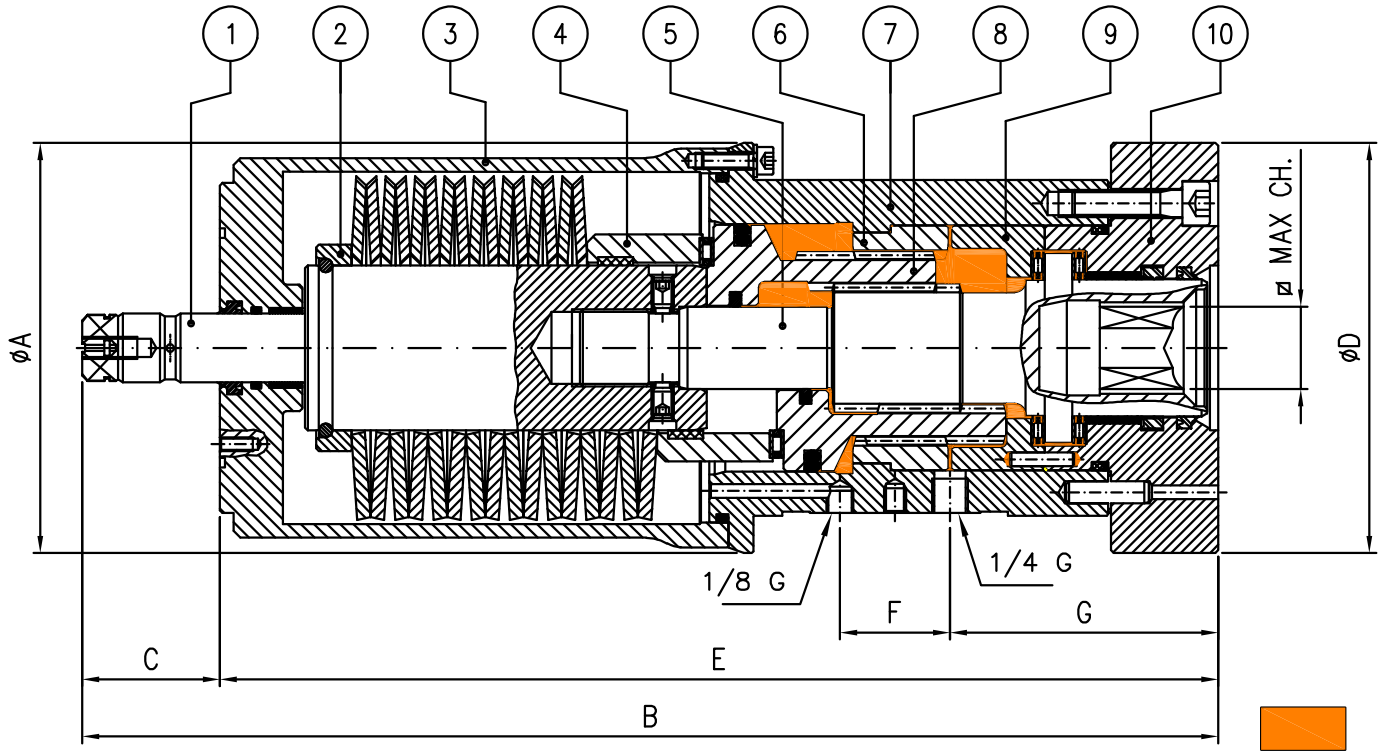

AREE IN PRESSIONE
PRESSURE AREAS

POS.	PARTICOLARI - *PARTS*	MATERIALE - *MATERIALS*
1	ALBERO POSTERIORE - *REAR SHAFT*	ACCIAIO INOX - *STAINLESS STEEL AISI 420*
2	ANELLO MOLLE - *SPRING RING*	ACCIAIO - *STEEL UNI C40*
3	FONDELLO POSTERIORE - *CAP*	ACCIAIO - *STEEL UNI C40*
4	DISTANZIALE PISTONE - *PISTON SPACER*	ACCIAIO - *STEEL UNI C40*
5	ALBERO - *SHAFT*	ACCIAIO INOX - *STAINLESS STEEL AISI 420*
6	BOCCOLA DENTATA- *TEETH BUSHING*	GHISA SFEROIDALE - *NODULAR CAST IRON EN-GJS-500-7C UNI EN 1563:2012*
7	CAMICIA ATTUATORE - *HOUSING*	ACCIAIO - *STEEL Fe 52.2*
8	PISTONE - *PISTON*	GHISA SFEROIDALE - *NODULAR CAST IRON EN-GJS-500-7C UNI EN 1563:2012*
9	DISTANZIALE - *SPACER*	ACCIAIO - *STEEL Fe 52.2*
10	FLANGIA FRONTALE - *FRONT FLANGE*	ACCIAIO - *STEEL UNI C40*
	GUARNIZIONI - *SEALS*	POLIURETANO, BUNA N, TEFLON - *POLIURETHANE, NBR, TEFLON*
	FINITURA ESTERNA - *COATING*	VERNIC. EPOSSIDICA - *EPOXIDE PAINTING*

MOD. *TYPE*	DIS. *DWG*	A	B	C	D	E	F	G	CH (MAX)	V (cm³)	T (Nm) FINE AP/CH END O/C	Weight (Kg)
ARS24	RS.17R/E18..	149	413	50	124	363	40	97.5	28	127	240	30
ARS32	RS.21H/E18..	149	413	50	149	363	40	97.5	28	127	325	30
ARS55	RS.26H/E18..	176	442	37	154	405	40	100	40	301	555	34
ARS69	RS.30C/E18..	176	515	37	154	478	40	156	40	365	698	38

Attuatore idraulico rotante a semplice effetto
Single acting hydraulic rotary actuator

Tab.ARS

Conform to:	Min/Max pressure (bar)	Working Temp. (°C)	Approval
UNI EN ISO5211/DIN 3337	135 ÷ 160	-20 ÷ 80	DNV / Lloyd's Register / RINA

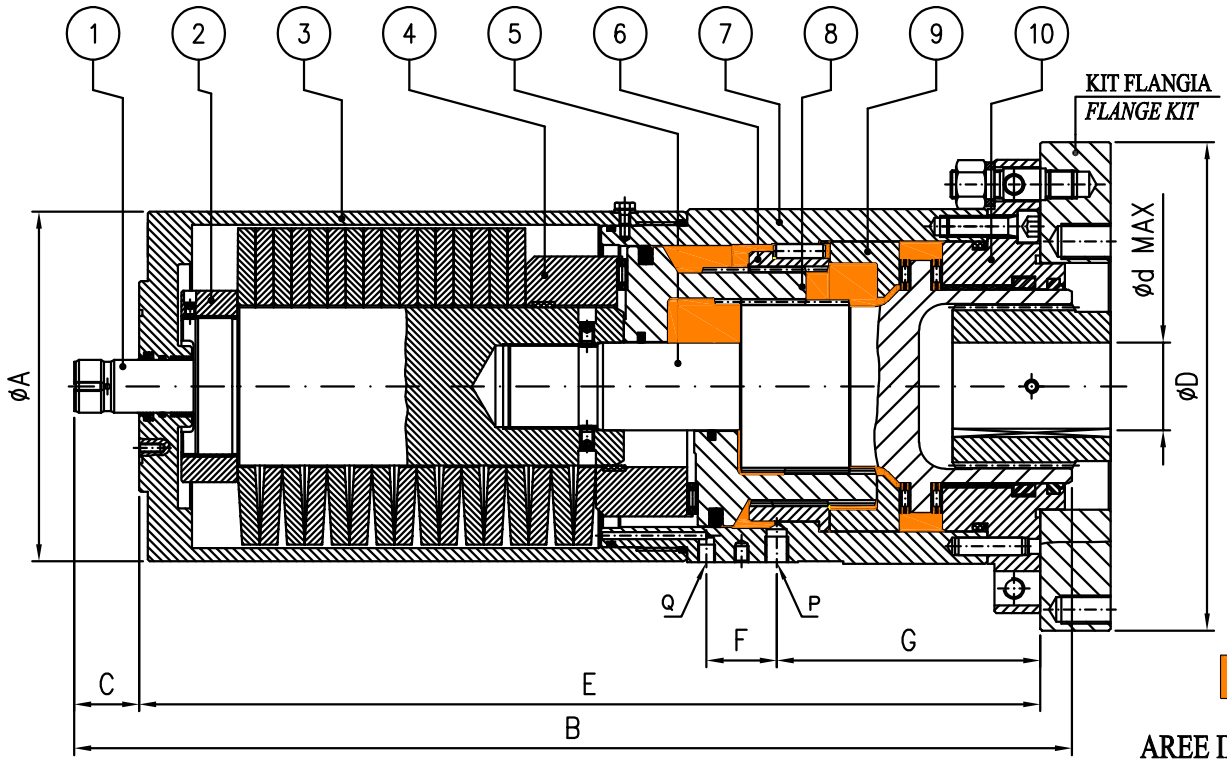

AREE IN PRESSIONE
PRESSURE AREAS

POS.	PARTICOLARI - *PARTS*	MATERIALE - *MATERIALS*
1	ALBERO POSTERIORE - *REAR SHAFT*	ACCIAIO INOX - *STAINLESS STEEL AISI 420*
2	ANELLO MOLLE - *SPRING RING*	ACCIAIO - *STEEL UNI C40*
3	FONDELLO POSTERIORE - *CAP*	ACCIAIO - *STEEL UNI C40*
4	DISTANZIALE PISTONE - *PISTON SPACER*	ACCIAIO - *STEEL UNI C40*
5	ALBERO - *SHAFT*	ACCIAIO INOX - *STAINLESS STEEL AISI 420*
6	BOCCOLA DENTATA- *TEETH BUSHING*	GHISA SFEROIDALE - *NODULAR CAST IRON EN-GJS-500-7C UNI EN 1563:2012*
7	CAMICIA ATTUATORE - *HOUSING*	ACCIAIO - *STEEL Fe 52.2*
8	PISTONE - *PISTON*	GHISA SFEROIDALE - *NODULAR CAST IRON EN-GJS-500-7C UNI EN 1563:2012*
9	DISTANZIALE - *SPACER*	ACCIAIO - *STEEL Fe 52.2*
10	FLANGIA FRONTALE - *FRONT FLANGE*	ACCIAIO - *STEEL UNI C40*
	GUARNIZIONI - *SEALS*	POLIURETANO, BUNA N, TEFLON - *POLIURETHANE, NBR, TEFLON*
	FINITURA ESTERNA - *COATING*	VERNIC. EPOSSIDICA - *EPOXIDE PAINTING*

MOD. *TYPE*	DIS. *DWG*	A	B	C	D	E	F	G	CH (MAX)	P	Q	V (cm³)	T (Nm) FINE AP/CH END O/C	Weight (Kg)
ARS110	RS.35G/E18..	199	568	37	258	531	40	150	65	1/4"Gas	1/8"Gas	776	1081	165
ARS135	RS.39H/E18..	199	612	37	258	575	40	150	65	1/4"Gas	1/8"Gas	776	1350	165
ARS155	RS.41I/E18..	199	643	37	258	588	40	150	65	1/4"Gas	1/8"Gas	776	1682	165
ARS195	RS.43F/E18..	225	738	37	328	701	58	183	80	3/8"Gas	1/4"Gas	1275	1935	170
ARS250	RS.47G/E18..	225	738	37	328	701	58	183	80	3/8"Gas	1/4"Gas	1275	2548	170
ARS450	RS.55G/E18..	272	829	37	348	792	58	241	110	3/8"Gas	1/4"Gas	2094	4496	245
ARS675	RS.61A/E18..	322	1132	37	445	1095	82	331	120	1/2"Gas	3/8"Gas	4977	6765	460

Attuatore idraulico rotante a doppio effetto
Double acting hydraulic rotary actuator

Tab.ARL/RL

Conform to:	Min/Max pressure (bar)	Working Temp. (°C)	Approval
UNI EN ISO5211/DIN 3337	50 ÷ 160	-20 ÷ 80	DNV / Lloyd's Register / RINA

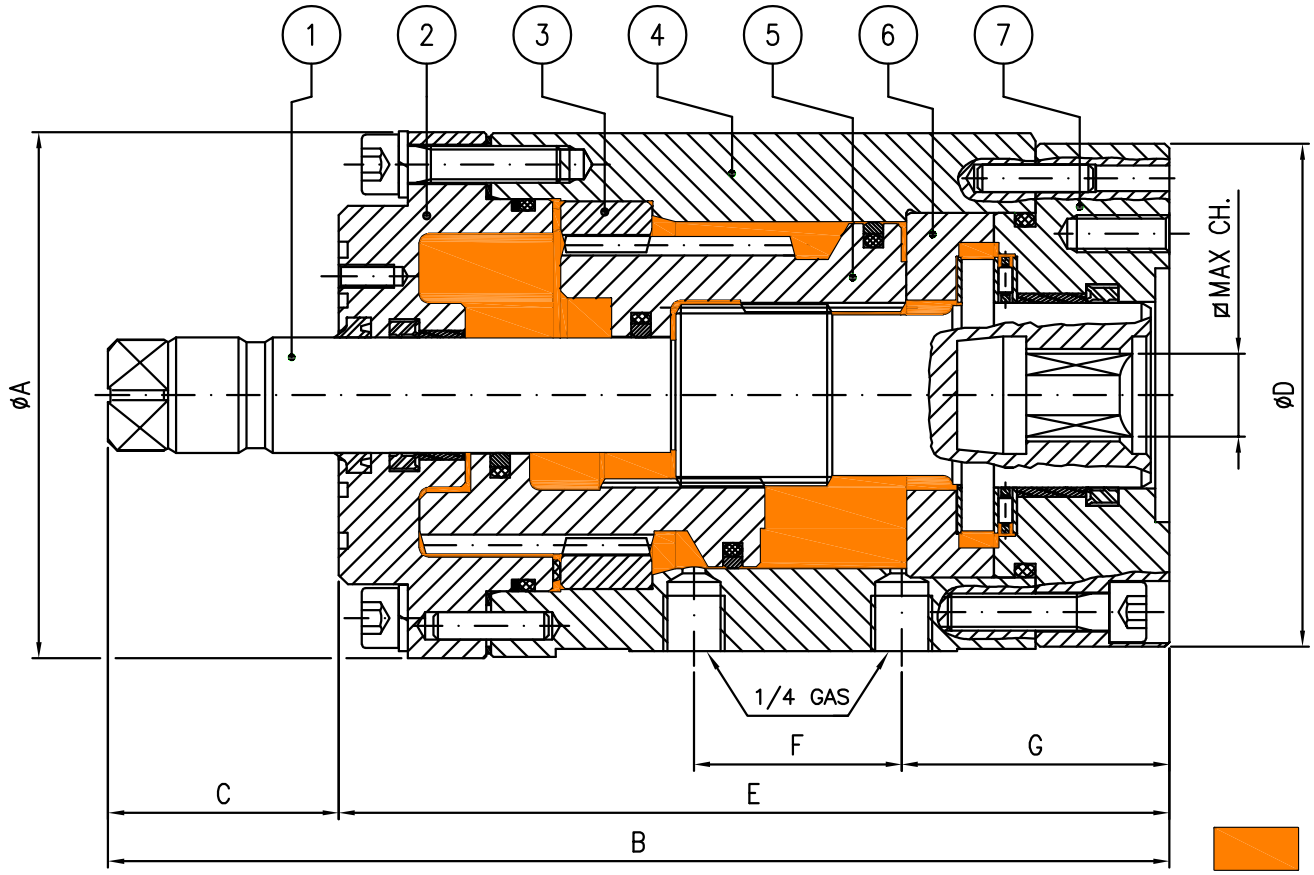

AREE IN PRESSIONE
PRESSURE AREAS

POS. PARTICOLARI - *PARTS*	MATERIALE - *MATERIALS*
1 ALBERO - *SHAFT*	ACCIAIO INOX - *STAINLESS STEEL AISI 420*
2 FONDELLO POSTERIORE - *CAP*	ACCIAIO - *STEEL UNI C40*
3 BOCCOLA DENTATA- *TEETH BUSHING*	GHISA SFEROIDALE - *NODULAR CAST IRON EN-GJS-500-7C UNI EN 1563:2012*
4 CAMICIA ATTUATORE - *HOUSING*	ACCIAIO - *STEEL Fe 52.2*
5 PISTONE - *PISTON*	GHISA SFEROIDALE - *NODULAR CAST IRON EN-GJS-500-7C UNI EN 1563:2012*
6 DISTANZIALE - *SPACER*	ACCIAIO - *STEEL Fe 52.2*
7 FLANGIA FRONTALE - *FRONT FLANGE*	ACCIAIO - *STEEL UNI C40*
GUARNIZIONI - *SEALS*	POLIURETANO, BUNA N, TEFLON - *POLIURETHANE, NBR, TEFLON*
FINITURA ESTERNA - *COATING*	VERNIC. EPOSSIDICA - *EPOXIDE PAINTING*

MOD. *TYPE*	DIS. *DWG*	A	B	C	D	E	F	G	CH (MAX)	V (cm³)	T@100bar (Nm)	Weight (Kg)
ARL10	RL.14/E18...	87	208	50	84	158	40	46	14	28	107	6
ARL20	RL.16/E18...	100	220	50	99	170	40	55	18	57	200	8.5
ARL45	RL.26/E18...	114	243	50	109	193	45	66	18	119	480	12.5
ARL45R	RL.26/E18...	114	243	50	119	193	45	66	24	119	480	12.5

Attuatore idraulico rotante a doppio effetto
Double acting hydraulic rotary actuator

Tab.ARL/RL

Conform to:	Min/Max pressure (bar)	Working Temp. (°C)	Approval
UNI EN ISO5211/DIN 3337	50 ÷ 160	-20 ÷ 80	DNV / Lloyd's Register / RINA

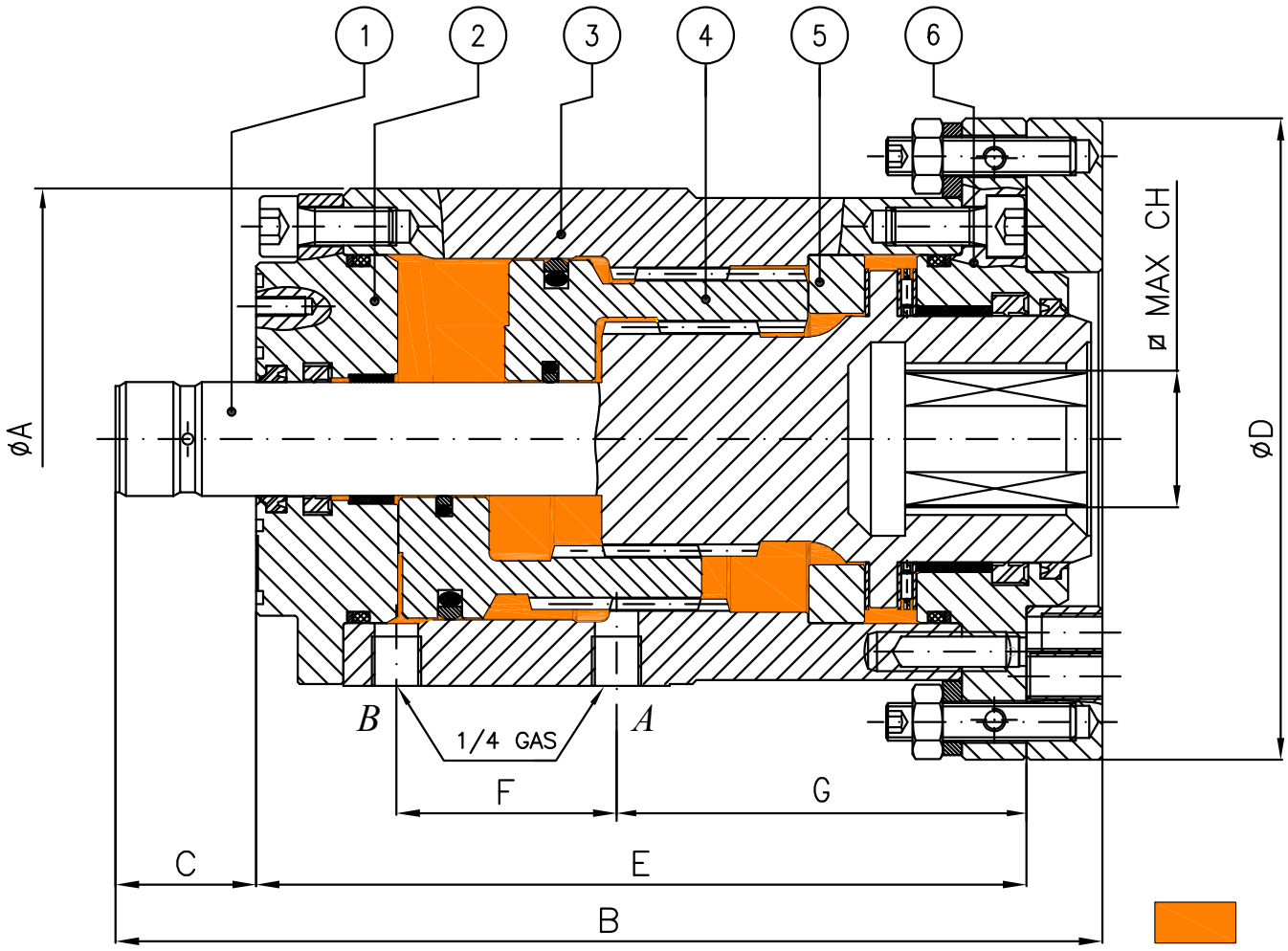

AREE IN PRESSIONE
PRESSURE AREAS

POS. PARTICOLARI - *PARTS*	MATERIALE - *MATERIALS*
1 ALBERO - *SHAFT*	ACCIAIO INOX - *STAINLESS STEEL AISI 420*
2 FONDELLO POSTERIORE - *CAP*	ACCIAIO - *STEEL UNI C40*
3 CAMICIA ATTUATORE - *HOUSING*	ACCIAIO - *STEEL Fe 52.2*
4 PISTONE - *PISTON*	GHISA SFEROIDALE - *NODULAR CAST IRON EN-GJS-500-7C UNI EN 1563:2012*
5 DISTANZIALE - *SPACER*	ACCIAIO - *STEEL Fe 52.2*
6 FLANGIA FRONTALE - *FRONT FLANGE*	ACCIAIO - *STEEL UNI C40*
GUARNIZIONI - *SEALS*	POLIURETANO, BUNA N, TEFLON - *POLIURETHANE, NBR, TEFLON*
FINITURA ESTERNA - *COATING*	VERNIC. EPOSSIDICA - *EPOXIDE PAINTING*

MOD. *TYPE*	DIS. *DWG*	A	B	C	D	E	F	G	CH (MAX)	V (cm³)	T@100bar (Nm)	Weight (Kg)
ARL80(75)	RL.32/E18...(RL33)	132	240	37	169	203	58	108	36	179	790	20
ARL120(110)	RL.36/E18...(RL40)	137	283	37	179	224	58	128	44	262	1160	30
ARL210(200)	RL.44/E18...(RL47)	151	323	37	199	268	75	164	52	450	1997	35

Attuatore idraulico rotante a doppio effetto
Double acting hydraulic rotary actuator

Tab.ARL/RL

Conform to:	Min/Max pressure (bar)	Working Temp. (°C)	Approval
UNI EN ISO5211/DIN 3337	50 ÷ 160	-20 ÷ 80	DNV / Lloyd's Register / RINA

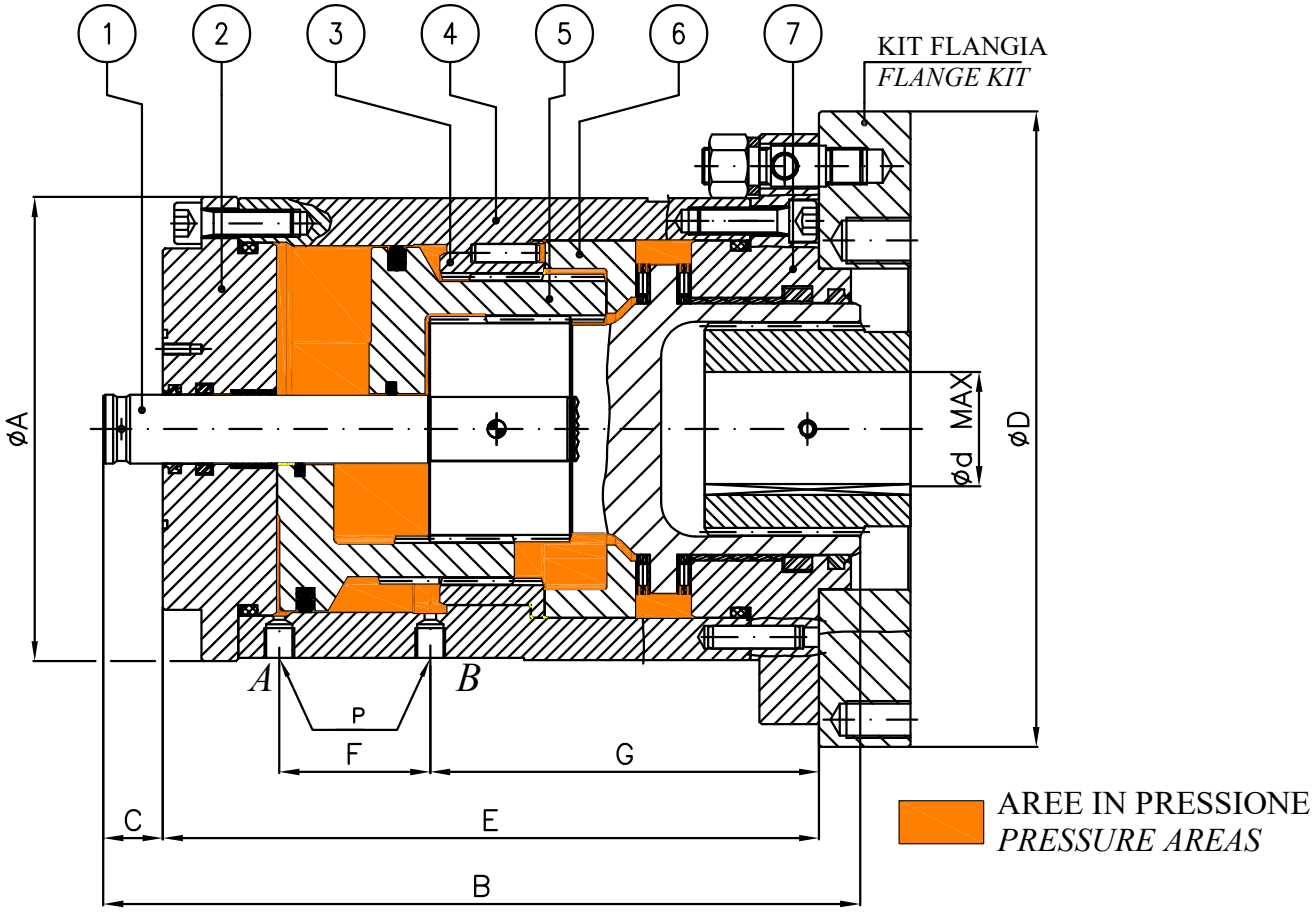

POS. PARTICOLARI - *PARTS*	MATERIALE - *MATERIALS*
1 ALBERO - *SHAFT*	ACCIAIO INOX - *STAINLESS STEEL AISI 420*
2 FONDELLO POSTERIORE - *CAP*	ACCIAIO - *STEEL UNI C40*
3 BOCCOLA DENTATA- *TEETH BUSHING*	GHISA SFEROIDALE - *NODULAR CAST IRON EN-GJS-500-7C UNI EN 1563:2012*
4 CAMICIA ATTUATORE - *HOUSING*	ACCIAIO - *STEEL Fe 52.2*
5 PISTONE - *PISTON*	GHISA SFEROIDALE - *NODULAR CAST IRON EN-GJS-500-7C UNI EN 1563:2012*
6 DISTANZIALE - *SPACER*	ACCIAIO - *STEEL Fe 52.2*
7 FLANGIA FRONTALE - *FRONT FLANGE*	ACCIAIO - *STEEL UNI C40*
GUARNIZIONI - *SEALS*	POLIURETANO, BUNA N, TEFLON - *POLIURETHANE, NBR, TEFLON*
FINITURA ESTERNA - *COATING*	VERNIC. EPOSSIDICA - *EPOXIDE PAINTING*

MOD. *TYPE*	DIS. *DWG*	A	B	C	D	E	F	G	d (MAX)	P	V (cm³)	T@100bar (Nm)	Weight (Kg)
ARL320	RL.52/E18...	203	342	37	278	305	66	170	65	1/4" Gas	776	3258	59
ARL600	RL.60/E18...	228	405	37	328	368	82	216	80	3/8" Gas	1386	5840	94
ARL1000	RL.67/E18...	265	473	37	348	436	120	252	110	3/8" Gas	2307	9715	145
ARL2000	RL.78/E18...	324	570	37	445	533	135	331	120	1/2" Gas	4977	22770	258

Flange - Norme UNI EN1092-1
Connection flanges - UNI EN1092-1 standard

Tab.100

PN–NP	PN2,5–PN6				PN10				PN16				PN25				PN40			
DN (mm)	D	K	f	Holes NO. f	D	K	f	Holes NO. f	D	K	f	Holes NO. f	D	K	f	Holes NO. f	D	K	f	Holes NO. f
15	80	55	11	4	95	65	14	4	95	65	14	4	95	65	14	4	95	65	14	4
20	90	65	11	4	105	75	14	4	105	75	14	4	105	75	14	4	105	75	14	4
25	100	75	11	4	115	85	14	4	115	85	14	4	115	85	14	4	115	85	14	4
32	120	90	14	4	140	100	18	4	140	100	18	4	140	100	18	4	140	100	18	4
40	130	100	14	4	150	110	18	4	150	110	18	4	150	110	18	4	150	110	18	4
50	140	110	14	4	165	125	18	4	165	125	18	4	165	125	18	4	165	125	18	4
65 (1)	160	130	14	4	185	145	18	4	185	145	18	4	185	145	18	8	185	145	18	8
80	190	150	18	4	200	160	18	8	200	160	18	8	200	160	18	8	200	160	18	8
100	210	170	18	4	220	180	18	8	220	180	18	8	235	190	22	8	235	190	22	8
125	240	200	18	8	250	210	18	8	250	210	18	8	270	220	26	8	270	220	26	8
150	265	225	18	8	285	240	22	8	285	240	22	8	300	250	26	8	300	250	26	8
175	295	255	18	8	315	270	22	8	315	270	22	8	330	280	25	12	350	295	30	12
200	320	280	18	8	340	295	22	8	340	295	22	12	360	310	26	12	375	320	30	12
225	345	305	18	8	370	325	22	8	370	325	22	12	395	340	30	12	420	355	33	12
250	375	335	18	12	395	350	22	12	405	355	26	12	425	370	30	12	450	385	33	12
275	400	360	18	12	420	375	22	12	435	385	25	12	455	400	30	12	480	415	33	12
300	440	395	22	12	445	400	22	12	460	410	26	12	485	430	30	16	515	450	33	16
325	465	420	22	12	475	430	22	16	490	440	25	16	525	460	33	16	550	480	36	16
350	490	445	22	12	505	460	22	16	520	470	26	16	555	490	33	16	580	510	36	16
375	515	470	22	16	540	490	25	16	555	500	30	16	595	525	36	16	625	550	40	16
400	540	495	22	16	565	515	26	16	580	525	30	16	620	550	36	16	660	585	39	16
450	595	550	22	16	615	565	26	20	640	585	30	20	670	600	36	20	685	610	39	20
500	645	600	22	20	670	620	26	20	715	650	33	20	730	660	36	20	755	670	42	20
600	755	705	26	20	780	725	30	20	840	770	36	20	845	770	39	20	890	795	48	20
700	860	810	26	24	895	840	30	24	910	840	36	24	960	875	42	24	995	900	48	24
800	975	920	30	24	1015	950	33	24	1025	950	39	24	1085	990	48	24	1140	1030	56	24
900	1075	1020	30	24	1115	1050	33	28	1125	1050	39	28	1185	1090	48	28	1250	1140	56	28
1000	1175	1120	30	28	1230	1160	36	28	1255	1170	42	28	1320	1210	56	28	1360	1250	56	28

(1): Foratura DN65 PN16 può essere fornita con 8 fori (øf)

(1): Drilling ND65 NP16 can be supplied with 8 holes (øf)

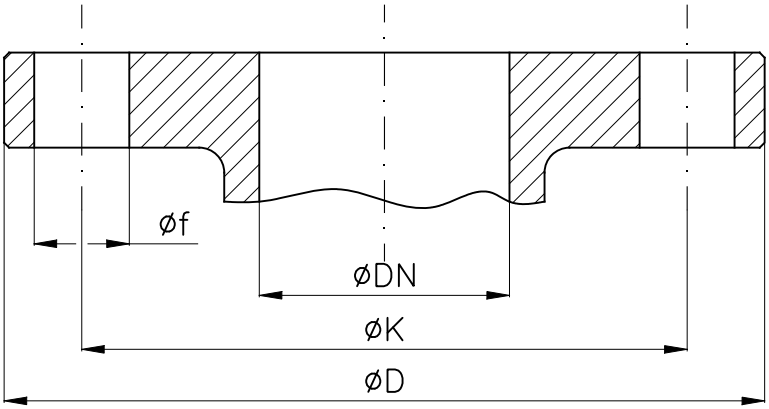

Flange - Norme ANSI B16.5
Connection flanges - ANSI B16.5 standard

Tab.101

DN		ANSI125				ANSI150				ANSI300			
inches	mm	D	K	f	Holes NO. f	D	K	f	Holes NO. f	D	K	f	Holes NO. f
1/2”	15	88.9	60	16	4	88.9	60	16	4	95	67	16	4
3/4”	20	98.4	70	16	4	98.4	70	16	4	117	83	19	4
1”	25	108	79	16	4	108	79	16	4	124	89	19	4
1”1/4	32	118	89	16	4	118	89	16	4	133	98	19	4
1”1/2	40	127	98	16	4	127	98	16	4	156	114	22	4
2”	50	152	121	19	4	152	121	19	4	165	127	19	8
2”1/2	65	178	140	19	4	178	140	19	4	191	149	22	8
3”	80	190	152	19	4	190	152	19	4	210	168	22	8
3”1/2	90	216	178	19	8	216	178	19	8	229	184	22	8
4”	100	229	191	19	8	229	191	19	8	254	200	22	8
5”	125	254	216	22	8	254	216	22	8	279	235	22	8
6”	150	279	241	22	8	279	241	22	8	318	270	22	12
8”	200	343	298	22	8	343	298	22	8	381	330	25	12
10”	250	406	362	25	12	406	362	25	12	445	387	29	16
12”	300	483	432	25	12	483	432	25	12	521	451	32	16
14”	350	533	476	29	12	533	476	29	12	584	514	32	20
16”	400	597	540	29	16	597	540	29	16	648	571	35	20
18”	450	635	578	32	16	635	578	32	16	711	629	35	24
20”	500	698	635	32	20	698	635	32	20	775	686	35	24

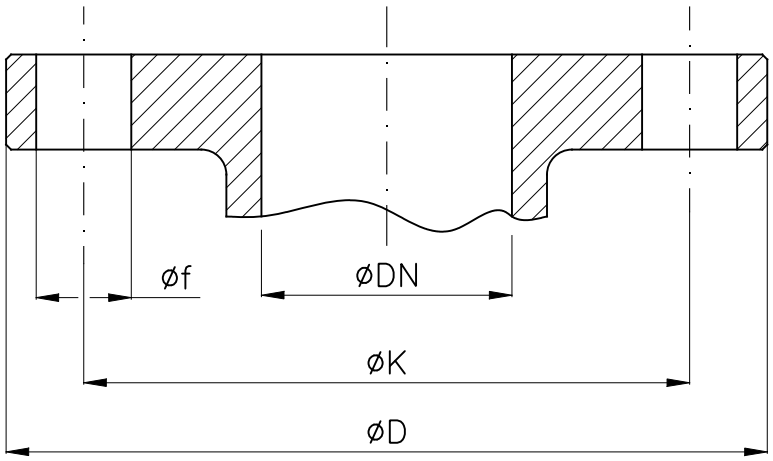

Flange serie leggera PN10 Marina Militare UNAV9285-9286
Flanges light series NP10 Marine standard UNAV9285-9286

Tab.102

Per DN15 ÷ 50
For ND15 ÷ 50

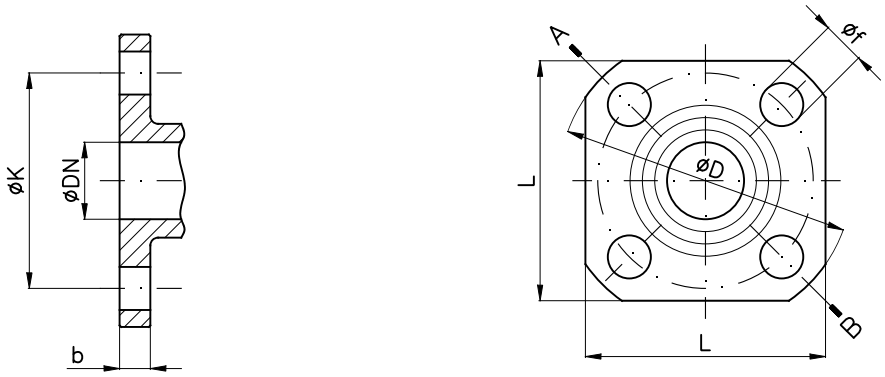

Per DN≥60
For ND≥60

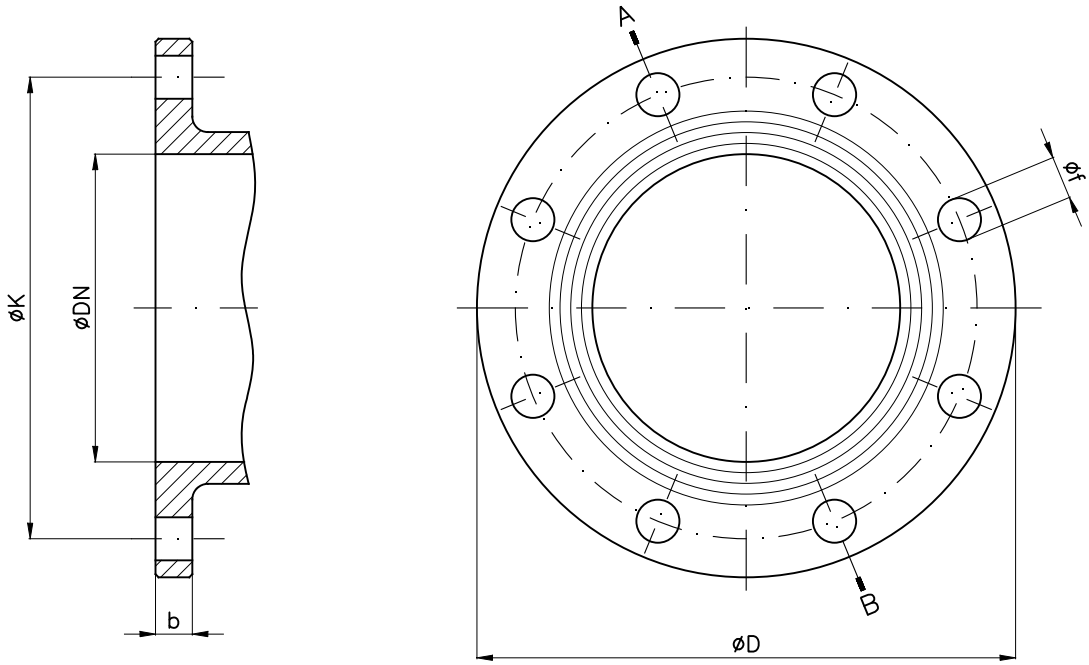

DN	D	K	f	Holes NO. f	b	L
15	90	65	14	4	10	72
20	90	65	14	4	10	72
25	95	70	14	4	10	78
32	100	75	14	4	10	82
40	110	85	14	4	10	85
50	120	95	14	4	10	95
60	135	110	14	6	10	–
65/70	140	115	14	6	10	–
80	155	130	14	8	10	–
90	170	145	14	8	12	–
100	175	150	14	8	12	–
125	200	175	14	12	12	–
150	230	205	14	12	12	–
175	270	240	18	12	16	–
200	295	265	18	12	18	–
250	350	320	18	20	18	–
300	385	360	14	24	18	–
350	450	410	14	20	18	–
400	505	465	14	24	18	–
450	540	515	14	24	18	–

Flange serie leggera PN10 Marina Militare
Flanges light series NP10 Marine standard

Tab.103

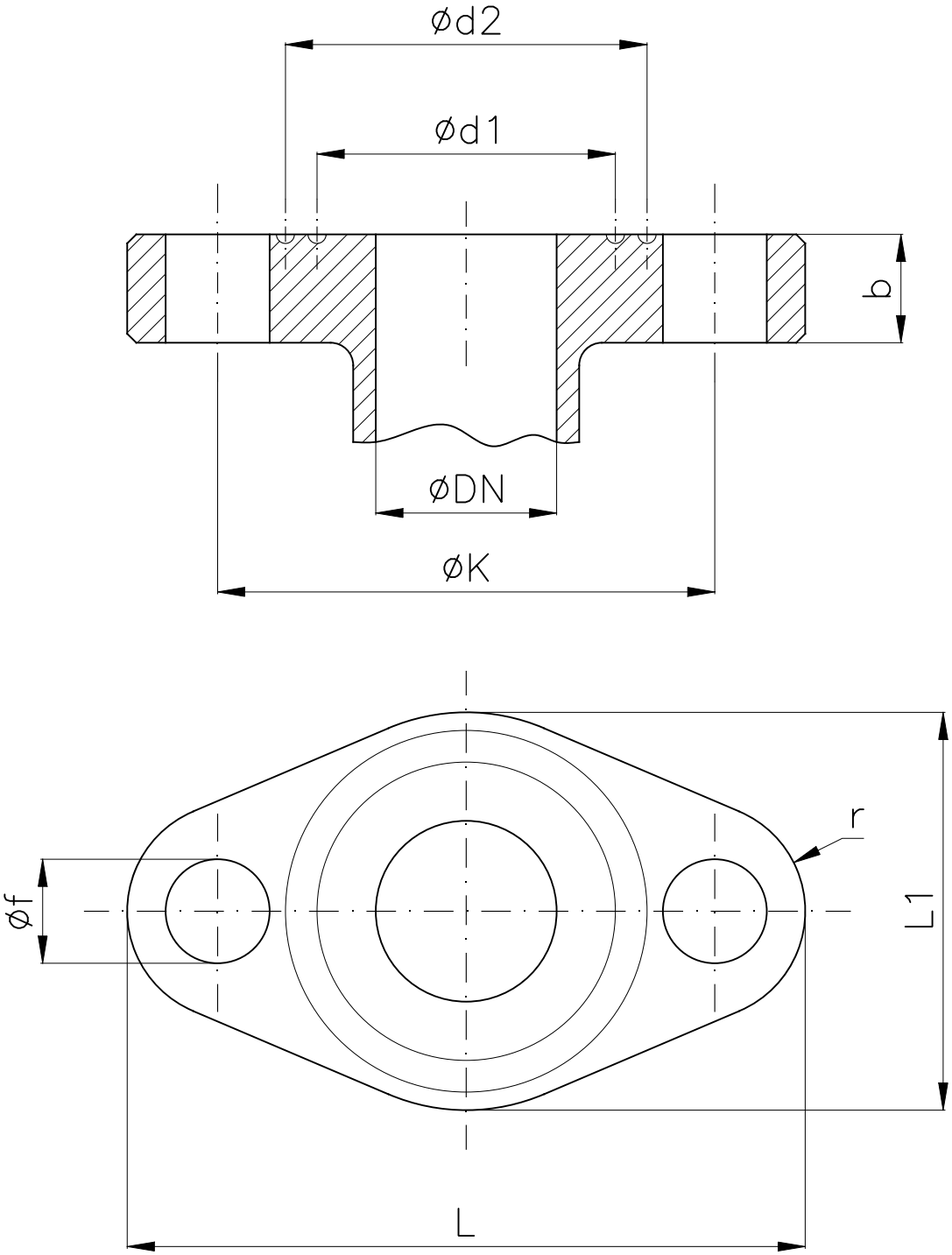

DN	b	d1	d2	f	K	L	L1	r
10	12	24	–	11.5	42	62	30	12
15	12	30	–	11.5	48	68	36	12
20	12	33	40	11.5	55	75	44	12
25	12	38	45	14	62	86	48	15
32	14	46	53	14	70	94	58	15

www.medanaevisca.it