LLOYD'S REGISTER fire test: MLN0401710/1–2

BS 5041–1 (Drawing No. 480A)

Conform to:
UNI EN1092

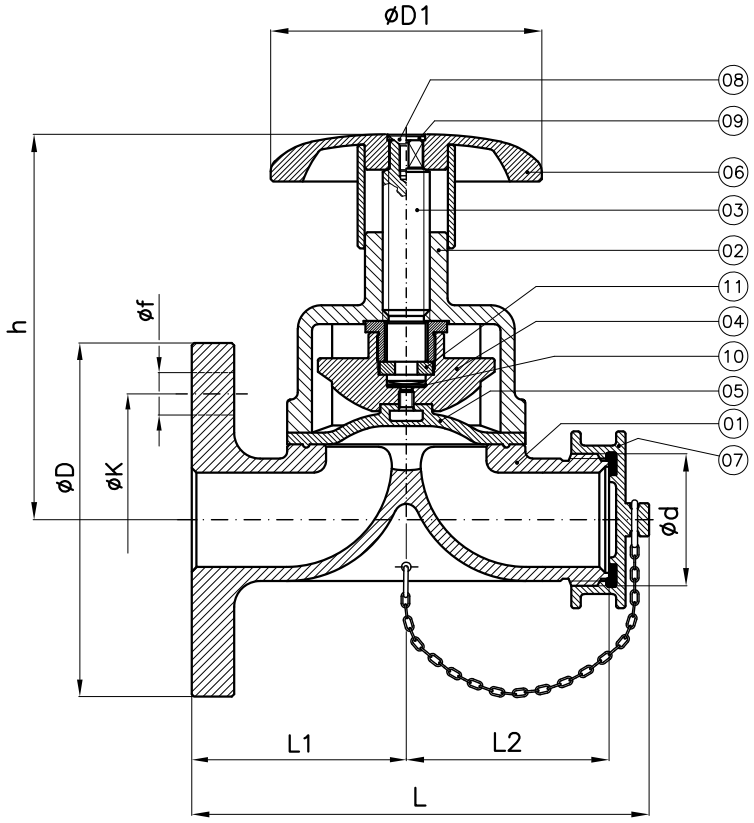

Tab115.VM

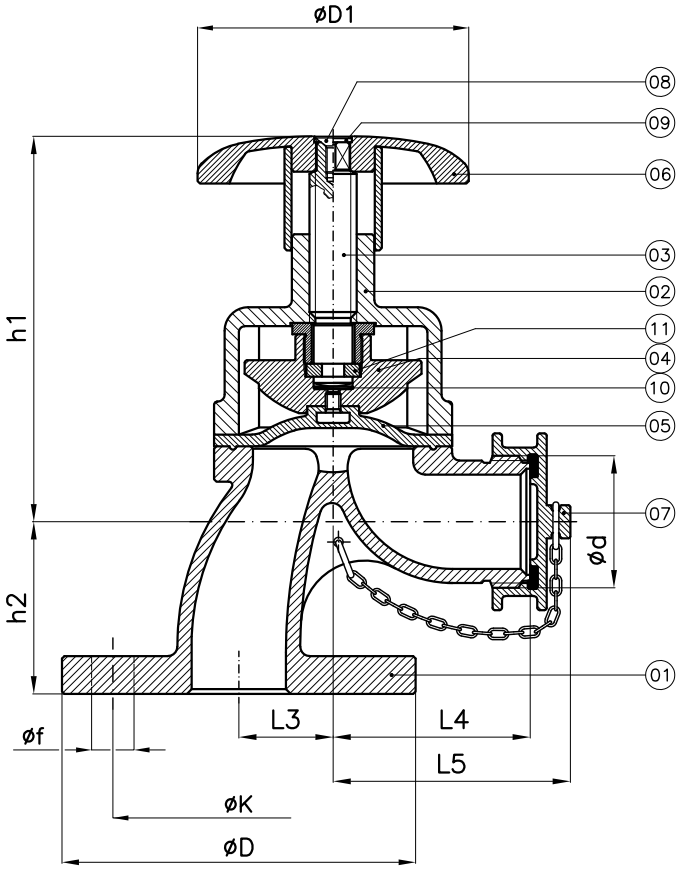

Tab115.AM

DN	D1	h chiusa close	h aperta open	h1 chiusa close	h1 aperta open	h2	L	L1	L2	L3	L4	L5	Weight (Kg)	PN6–NP6 D	PN6–NP6 K	PN6–NP6 f	PN6–NP6 Holes NO. f	PN10–NP10 D	PN10–NP10 K	PN10–NP10 f	PN10–NP10 Holes NO. f	PN16–NP16 D	PN16–NP16 K	PN16–NP16 f	PN16–NP16 Holes NO. f
40(115VM)	115	146	165	–	–	–	195	90	85	–	–	–	9	130	100	14	4	150	110	18	4	150	110	18	4
40(115AM)	115	–	–	146	165	72	–	–	–	40	85	105	10	130	100	14	4	150	110	18	4	150	110	18	4
65(115VM)	115	155	180	–	–	–	275	130	120	–	–	–	15	160	130	14	4	185	145	18	4	185	145	18	4
65(115AM)	115	–	–	155	180	75	–	–	–	50	110	135	15	160	130	14	4	185	145	18	4	185	145	18	4

DN	Fire hose connection		
	ød EXEC. A	ød EXEC. B	ød EXEC. C
40(115VM) 40(115AM)	GAS plug 1"1/2GAS (BSP)	M56x4 (UNI45) with UNI plug	9 threads per inch with NH plug (1"1/2NH)
65(115VM) 65(115AM)	GAS plug 2"1/2GAS (BSP)	M85x6 (UNI70) with UNI plug	7,5 threads per inch with NH plug (2"1/2NH)

Combinazione materiali standard – Standard materials Combination

ITEM	DENOMINAZIONE DENOMINATION	B/O MATERIALE MATERIAL	ITEM	DENOMINAZIONE DENOMINATION	B/O MATERIALE MATERIAL
01	Body	Bronze UNI EN1982 G-CuSn5Zn5Pb5	07	Screw plug	Brass CW509L (OT60)
02	Bonnet	Bronze UNI EN1982 G-CuSn5Zn5Pb5	08	Screw M6x16	Stainless steel AISI316 UNI EN10088
03	Stem	Brass CW617N (OT58)	09	Washer UNI6592	Stainless steel AISI316 UNI EN10088
04	Disc	Bronze UNI EN1982 G-CuSn5Zn5Pb5	10	Bearing bush	PTFE
05	Membrane	EPDM HT	11	Split collet	Brass CW617N (OT58)
06	Handwheel	Brass CW509L (OT60)			

Nota: Combinazioni materiali non standard a richiesta
Note: Non standard materials combinations on request

LLOYD'S REGISTER fire test: MLN0401710/1-2

BS 5041-1 (Drawing No. 480A)

Conform to:
UNI EN1092

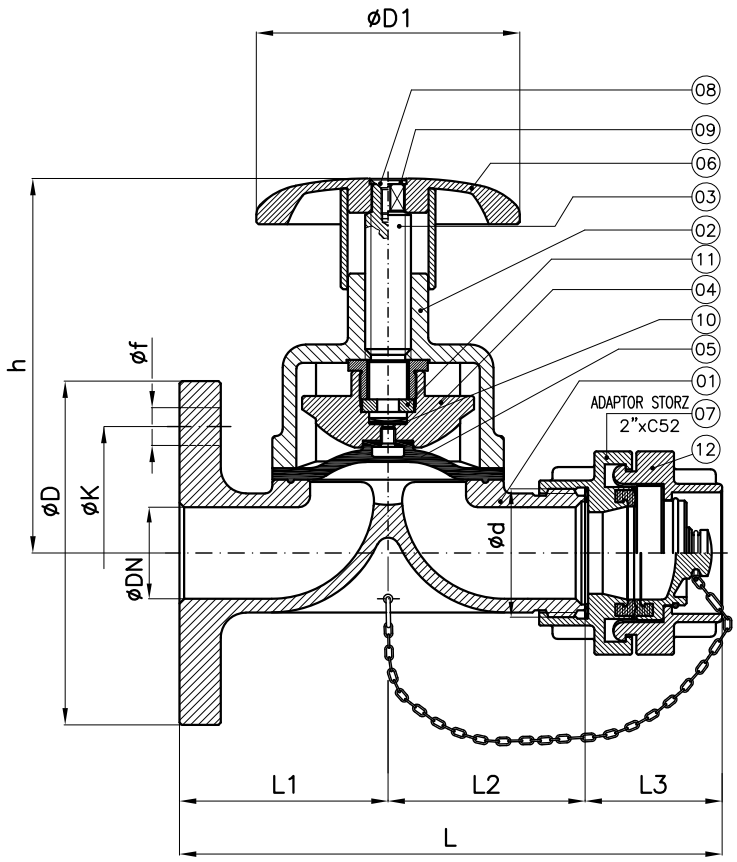

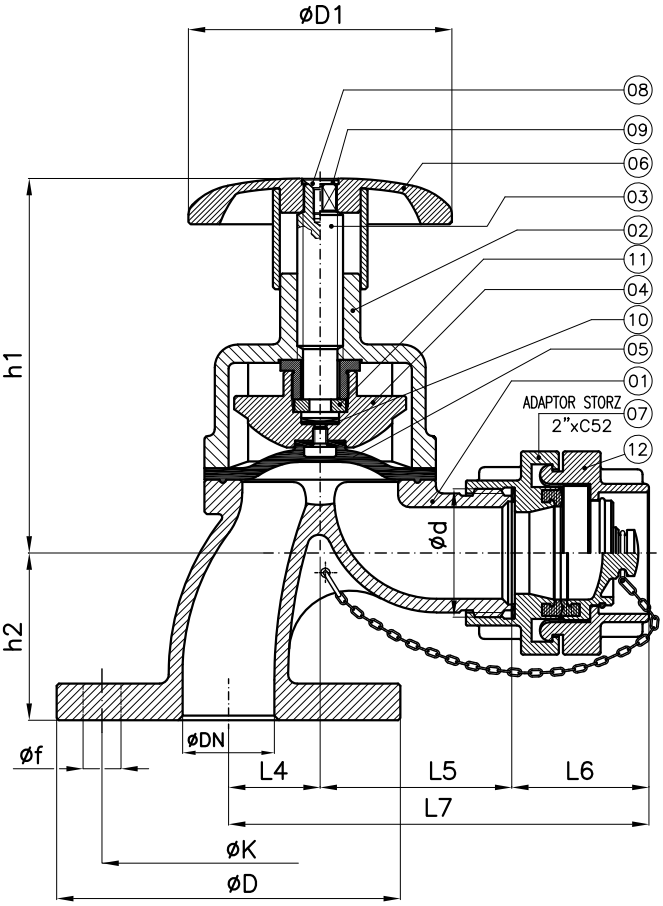

Tab115.VM-STORZ

DN40

Tab115.AM-STORZ

DN40

																PN6-NP6				PN10-NP10				PN16-NP16			
DN	D1	h chiusa close	h aperta open	h1 chiusa close	h1 aperta open	h2	L	L1	L2	L3	L4	L5	L6	L7	Weight (Kg)	D	K	f	Holes NO. f	D	K	f	Holes NO. f	D	K	f	Holes NO. f
40(115VM)-storz	115	146	165	–	–	–	240	90	85	65	–	–	–	–	11	130	100	14	4	150	110	18	4	150	110	18	4
40(115AM)-storz	115	–	–	146	165	72	–	–	–	–	40	85	65	190	12	130	100	14	4	150	110	18	4	150	110	18	4

DN	Fire hose connection ød
40(115VM)-storz	2"Gas Thd/Male with STORZ C52
40(115AM)-storz	

Combinazione materiali standard - Standard materials Combination

		B/O			B/O
ITEM	DENOMINAZIONE DENOMINATION	MATERIALE MATERIAL	ITEM	DENOMINAZIONE DENOMINATION	MATERIALE MATERIAL
01	Body	Bronze UNI EN1982 G-CuSn5Zn5Pb5	07	Adaptor storz	Brass CW509L (OT60)
02	Bonnet	Bronze UNI EN1982 G-CuSn5Zn5Pb5	08	Screw M6x16	Stainless steel AISI316 UNI EN10088
03	Stem	Brass CW617N (OT58)	09	Washer UNI6592	Stainless steel AISI316 UNI EN10088
04	Disc	Bronze UNI EN1982 G-CuSn5Zn5Pb5	10	Bearing bush	PTFE
05	Membrane	EPDM HT	11	Split collet	Brass CW617N (OT58)
06	Handwheel	Brass CW509L (OT60)	12	Blank cap storz	Brass CW509L (OT60)
Nota: Note:	Combinazioni materiali non standard a richiesta Non standard materials combinations on request				

Valvole idrante a membrana (diaframma) via diritta - angolo retto serie PN6-10-16

Diaphragm valves straight type - angle type NP6-10-16

Tab.115M

Conform to:
UNI EN1092

LLOYD'S REGISTER fire test: MLN0401710/1–2

BS 5041–1 (Drawing No. 480A)

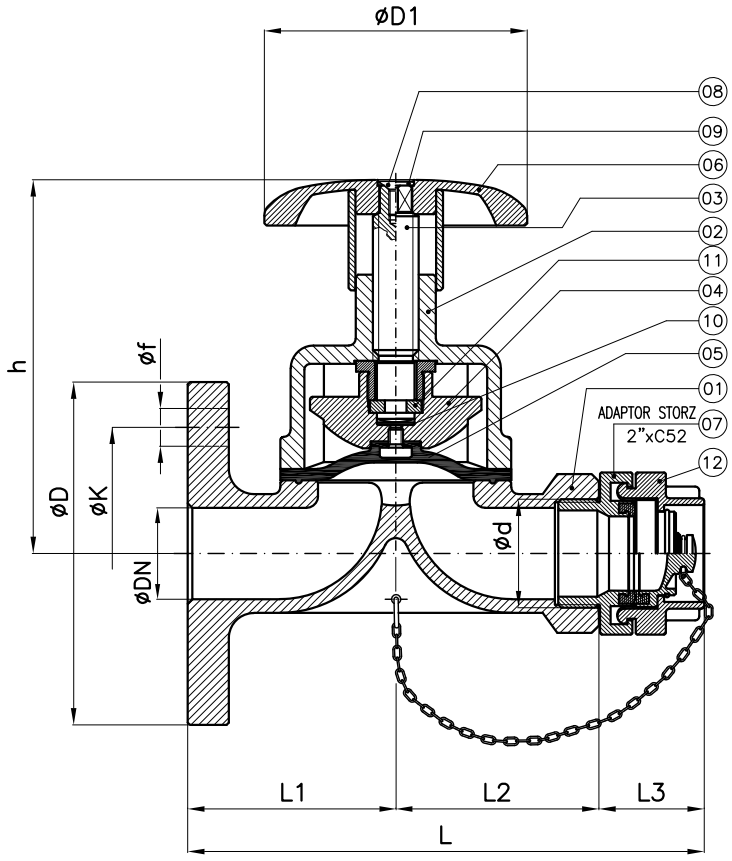

Tab115.VM–STORZ

DN65

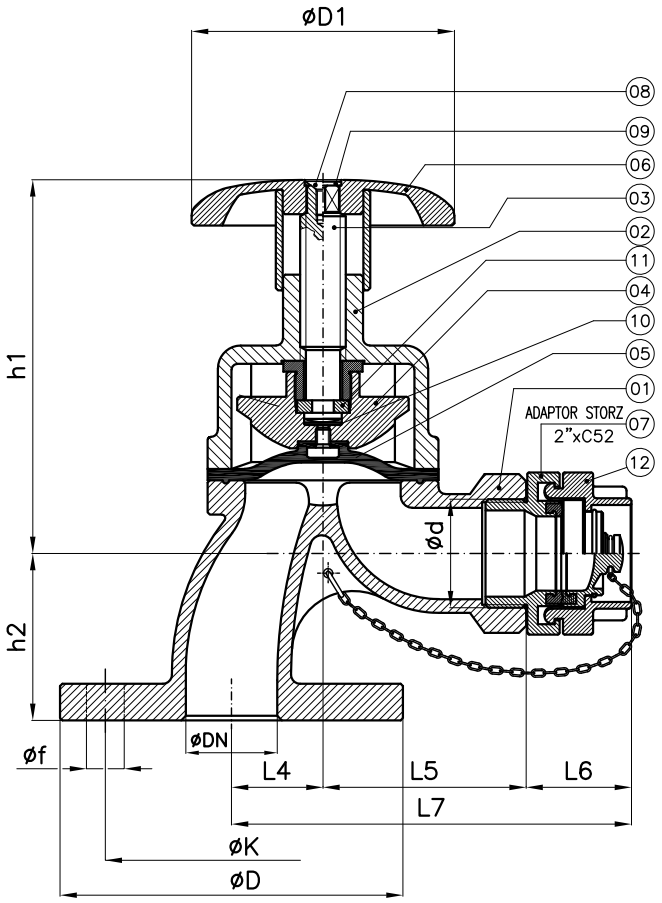

Tab115.AM–STORZ

DN65

																PN6–NP6				PN10–NP10				PN16–NP16			
DN	D1	h chiusa *close*	h aperta *open*	h1 chiusa *close*	h1 aperta *open*	h2	L	L1	L2	L3	L4	L5	L6	L7	Weight (Kg)	D	K	f	Holes NO. f	D	K	f	Holes NO. f	D	K	f	Holes NO. f
65(115VM)–storz	115	155	180	–	–	–	312	130	120	62	–	–	–	–	17	160	130	14	4	185	145	18	4	185	145	18	4
65(115AM)–storz	115	–	–	155	180	75	–	–	–	–	50	110	62	222	17	160	130	14	4	185	145	18	4	185	145	18	4

DN	Fire hose connection ød
65(115VM)–storz	2"Gas Thd/Female with STORZ C52
65(115AM)–storz	

Combinazione materiali standard – Standard materials Combination

		B/O			B/O
ITEM	DENOMINAZIONE DENOMINATION	MATERIALE MATERIAL	ITEM	DENOMINAZIONE DENOMINATION	MATERIALE MATERIAL
01	Body	Bronze UNI EN1982 G-CuSn5Zn5Pb5	07	Adaptor storz	Brass CW509L (OT60)
02	Bonnet	Bronze UNI EN1982 G-CuSn5Zn5Pb5	08	Screw M6x16	Stainless steel AISI316 UNI EN10088
03	Stem	Brass CW617N (OT58)	09	Washer UNI6592	Stainless steel AISI316 UNI EN10088
04	Disc	Bronze UNI EN1982 G-CuSn5Zn5Pb5	10	Bearing bush	PTFE
05	Membrane	EPDM HT	11	Split collet	Brass CW617N (OT58)
06	Handwheel	Brass CW509L (OT60)	12	Blank cap storz	Brass CW509L (OT60)
Nota: Note:	Combinazioni materiali non standard a richiesta Non standard materials combinations on request				