Valvole a sfera tipo wafer PN6-10DIN-16-ANSI150-ANSI300 con attuatore pneumatico

Ball valves wafer type NP6-10DIN-16-ANSI150-ANSI300 with pneumatic actuator

Tab.201PN

Conform to:
BS 5351 / ISO17292

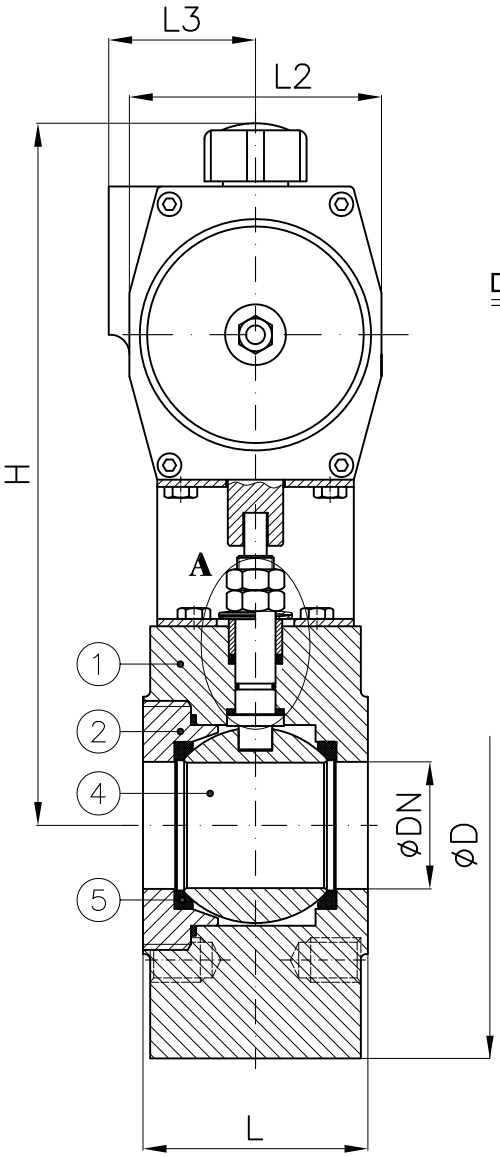

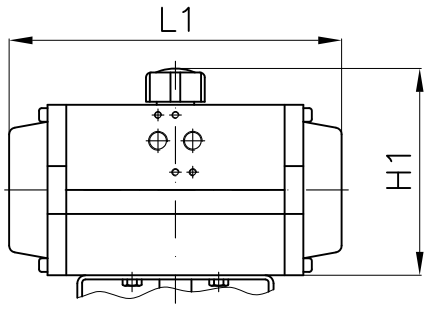

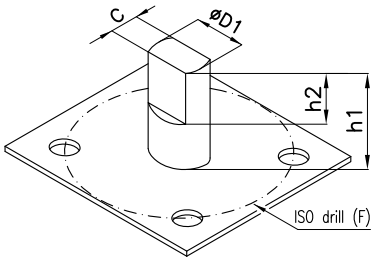

DETAIL - DETTAGLIO "A"

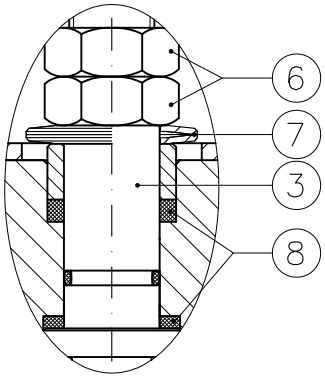

DN		D1xC	h1 (PN6)	h1 (PN16)	h2	ISO–F
15	1/2"	10x5.5	19	19	7	4xM5 ø35
20	3/4"	12x7.5	25	21	10	F04
25	1"	12x7.5	25	21	10	F04
32	1"1/4	14x9	34	33	10	F05
40	1"1/2	14x9	33	33	10	F05
50	2"	14x9	33	33	10	F05
65	2"1/2	22x14	62	55	13	F07
80	3"	22x14	51	50	13	F07
100	4"	30x18	65	61	13	F07
125	5"	30x18	64	64	24	F10
150	6"	30x18	64	64	20	F10

DA: DOUBLE ACTING
SR: SIMPLE ACTING (spring return)

DN		Pneumatic Actuator	H (~)	H1	L	L1	L2	L3	D PN6	D PN16	D ANSI150	D ANSI300	Weight (Kg)
15	1/2"	AP1 DA	185	92	35	142	60	41	69	88	79	88	2.5
		AP1 SR											
20	3/4"	AP2 DA	205	108	42	155	73	44.5	79	98	89	108	3.4
		AP2 SR											
25	1"	AP2 DA	210	108	46	155	73	44.5	88	108	99	118	4.1
		AP3 SR	230	125		213	85	49.5					5.2
32	1"1/4	AP3 DA	240	125	55	213	85	49.5	108	128	110	128	6.3
		AP3 SR											
40	1"1/2	AP3 DA	245	125	66	213	85	49.5	118	138	120	138	9
		AP3.5 SR	255	135		236	98	53					10.2
50	2"	AP3 DA	250	125	72	213	85	49.5	128	148	153	158	10.5
		AP3.5 SR	260	135		236	98	53					11.7
65	2"1/2	AP3.5 DA	275	135	98	236	98	53	148	168	168	178	18.7
		AP4 SR	290	150		276	110	58					20.1
80	3"	AP4 DA	305	150	120	276	110	58	178	188	190	198	25.1
		AP4.5 SR	330	177		310	128	69					28.3
100	4"	AP4.5 DA	365	177	140	310	128	69	200	220	220	230	38.3
		AP5 SR	375	190		366	140	–					40.1
125	5"	AP4.5 DA	375	177	177	310	128	69	230	250	250	260	55.3
		AP5.5 SR	410	211		388	160	–					61
150	6"	AP5 DA	405	190	210	366	140	–	280	280	280	300	79.1
		AP6 SR	450	235		468	175	–					88.7

Combinazione materiali standard – Standard materials Combination					
		A/316	316/316	B/316	B/B (Max ND4")
ITEM	DENOMINAZIONE DENOMINATION	MATERIALE MATERIAL	MATERIALE MATERIAL	MATERIALE MATERIAL	MATERIALE MATERIAL
01	Body	Forged steel ASTM A105N	Stainless steel AISI316 UNI EN10088	Bronze UNI EN1982 G–CuSn5Zn5Pb5	Bronze UNI EN1982 G–CuSn5Zn5Pb5
02	Lateral	Forged steel ASTM A105N	Stainless steel AISI316 UNI EN10088	Bronze UNI EN1982 G–CuSn5Zn5Pb5	Bronze UNI EN1982 G–CuSn5Zn5Pb5
03	Stem	Stainless steel AISI316 UNI EN10088	Stainless steel AISI316 UNI EN10088	Stainless steel AISI316 UNI EN10088	Aluminum Bronze (ND≤2") Bronze UNI EN1982 (ND2"1/2 to 4")
04	Ball	Stainless steel AISI316/304 UNI EN10088	Stainless steel AISI316 UNI EN10088	Stainless steel AISI316 UNI EN10088	Bronze UNI EN1982 G–CuSn5Zn5Pb5
05	Seat	PTFE/RPTFE	PTFE/RPTFE	PTFE/RPTFE	PTFE/RPTFE
06	Nuts	Galvanized Steel 8.8 EN20898–1	Galvanized Steel 8.8 EN20898–1	Galvanized Steel 8.8 EN20898–1	Galvanized Steel 8.8 EN20898–1
07	Socket springs	Galvanized Steel	Galvanized Steel	Galvanized Steel	Galvanized Steel
08	Stem seals	RPTFE	RPTFE	RPTFE	RPTFE

Nota: Combinazioni materiali non standard a richiesta
Note: Non standard materials combinations on request