Valvole a sfera flangiate PN16 con motore elettrico
Ball valves flanged NP16 with electric motor

Art.S2ME/VAL

Conform to:
UNI EN1092

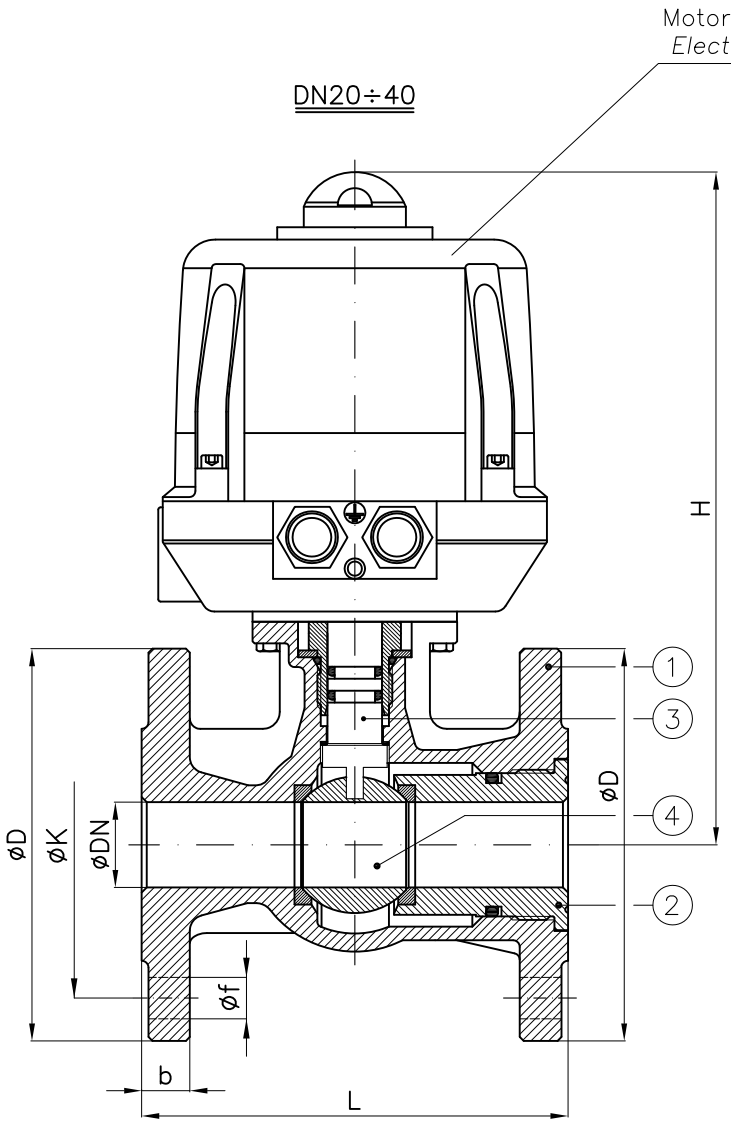

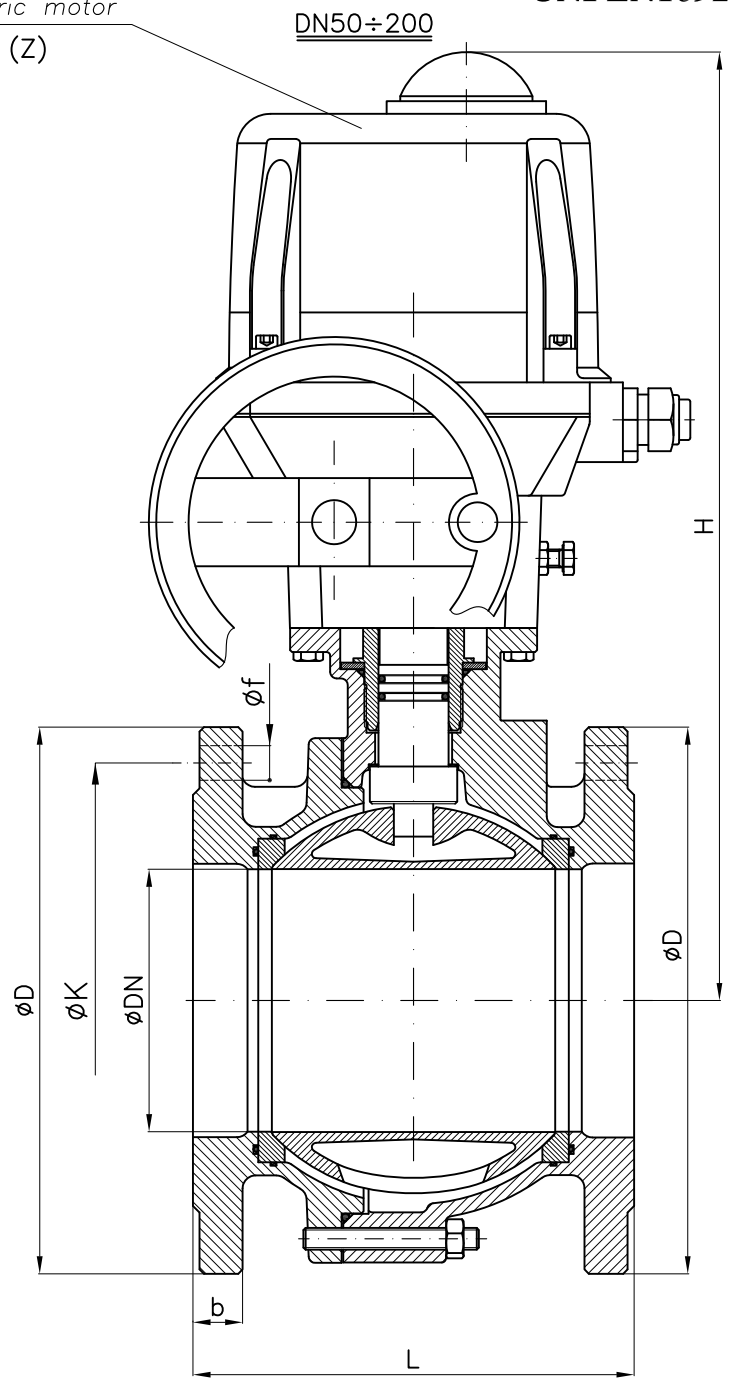

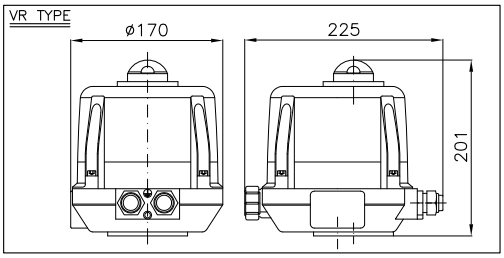

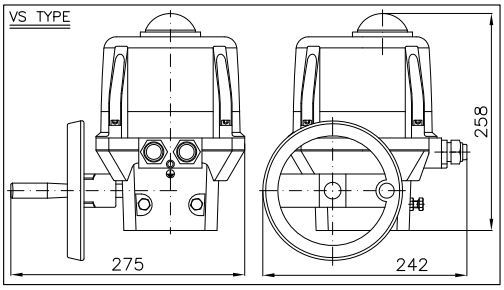

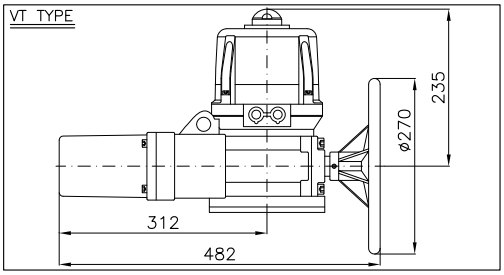

La scelta del motore dipende dalla pressione di esercizio dell'impianto
The choice of the motor depends from plant working pressure

DN	b	H (~)	L	D	K	f	Holes NO. f	Z	Weight (Kg)
20	16	255	120	105	75	14	4	VR25	7
25	16	260	125	115	85	14	4	VR25	8
32	18	265	130	140	100	18	4	VR25	9.5
40	19	280	140	150	110	18	4	VR25	11.5
50	19	290	150	165	125	18	4	VR45	13.5
65	19	300	170	185	145	18	4	VR75	16
80	19	380	180	200	160	18	8	VS100	23
100	19	390	190	220	180	18	8	VS150	28
125	19	425	200	250	210	18	8	VS300	41.5
150	19	490	210	285	240	22	8	VT600	68
200	20	540	400	340	295	22	12	VT1000	152

Valvole a sfera flangiate PN16 con motore elettrico
Ball valves flanged NP16 with electric motor

Art.S2ME/VAL

S2.300	**B/O**	**S2.722**	**BA/316**	**S2.021**	**G/316**
S2.322	**B/316**	**S2.377**	**B/BA**	**S2.100**	**GS/O**
S2.777	**BA/BA**	**S2.000**	**G/O**	**S2.121**	**GS/316**

ESECUZIONE FLANGE ØD PIANA(FF) GRADINO(RF)
FLANGES EXECUTION ØD FLAT(FF) STEP(RF)

ESECUZIONE PN6, ANSI150 SU RICHIESTA
EXECUTION NP6, ANSI150 ON REQUEST

		S2.300(FF)-(RF)	S2.322(FF)-(RF)	S2.777(FF)-(RF)
		B/O	B/316	BA/BA
ITEM	DENOMINAZIONE DENOMINATION	MATERIALE MATERIAL	MATERIALE MATERIAL	MATERIALE MATERIAL
01	Body	Bronze UNI EN1982 G-CuSn5Zn5Pb5	Bronze UNI EN1982 G-CuSn5Zn5Pb5	Alu Bronze UNI EN1982 G-CuAl10Ni5Fe5
02	Lateral	Bronze UNI EN1982 G-CuSn5Zn5Pb5	Bronze UNI EN1982 G-CuSn5Zn5Pb5	Alu Bronze UNI EN1982 G-CuAl10Ni5Fe5
03	Stem	Brass CW617N (OT58)	Stainless steel AISI316 UNI EN10088	Alu Bronze UNI EN1982 G-CuAl10Ni5Fe4
04	Ball	Brass CW617N (OT58)	Stainless steel AISI316 UNI EN10088	Alu Bronze UNI EN1982 G-CuAl10Ni5Fe5

		S2.722(FF)-(RF)	S2.377(FF)-(RF)	S2.000 (RF)
		BA/316	B/BA	G/O
ITEM	DENOMINAZIONE DENOMINATION	MATERIALE MATERIAL	MATERIALE MATERIAL	MATERIALE MATERIAL
01	Body	Alu Bronze UNI EN1982 G-CuAl10Ni5Fe5	Bronze UNI EN1982 G-CuSn5Zn5Pb5	Cast iron UNI EN1561 EN-GJL-250
02	Lateral	Alu Bronze UNI EN1982 G-CuAl10Ni5Fe5	Bronze UNI EN1982 G-CuSn5Zn5Pb5	Cast iron UNI EN1561 EN-GJL-250
03	Stem	Stainless steel AISI316 UNI EN10088	Alu Bronze UNI EN1982 G-CuAl10Ni5Fe4	Brass CW617N (OT58)
04	Ball	Stainless steel AISI316 UNI EN10088	Alu Bronze UNI EN1982 G-CuAl10Ni5Fe5	Brass CW617N (OT58)

		S2.021 (RF)	S2.100 (RF)	S2.121 (RF)
		G/316	GS/O	GS/316
ITEM	DENOMINAZIONE DENOMINATION	MATERIALE MATERIAL	MATERIALE MATERIAL	MATERIALE MATERIAL
01	Body	Cast iron UNI EN1561 EN-GJL-250	Nodular cast iron EN-GJS-400-15U UNI EN1563	Nodular cast iron EN-GJS-400-15U UNI EN1563
02	Lateral	Cast iron UNI EN1561 EN-GJL-250	Nodular cast iron EN-GJS-400-15U UNI EN1563	Nodular cast iron EN-GJS-400-15U UNI EN1563
03	Stem	Stainless steel AISI304 UNI EN10088	Brass CW617N (OT58)	Stainless steel AISI304 UNI EN10088
04	Ball	Stainless steel AISI316 UNI EN10088	Brass CW617N (OT58)	Stainless steel AISI316 UNI EN10088

Nota: Combinazioni materiali non standard a richiesta
Note: Non standard materials combinations on request