Valvole di ritegno in acciaio inox AISI316 con dispositivo di taratura
Stainless steel AISI316 check valves with calibration device

Art.9YAL

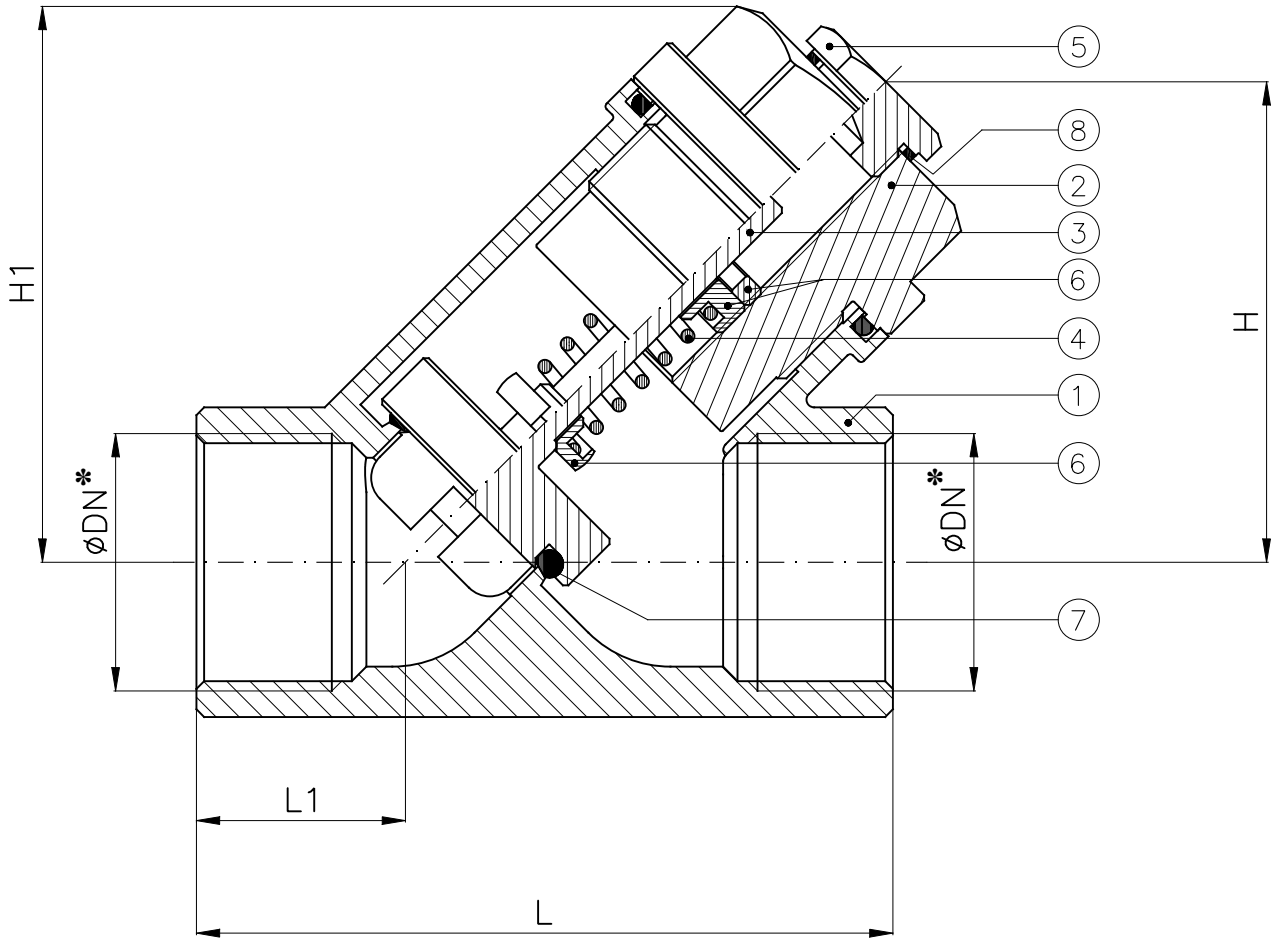

Combinazione materiali standard – Standard materials Combination		
		316/316
ITEM	DENOMINAZIONE DENOMINATION	MATERIALE MATERIAL
01	Body	Stainless steel AISI316 UNI EN10088
02	Bonnet	Stainless steel AISI316 UNI EN10088
03	Disc	Stainless steel AISI316 UNI EN10088
04	Spring	Stainless steel UNI EN10151
05	Plug	Brass CW617N (OT58)
06	Spring regulation	Brass CW617N (OT58)
07	Gasket	O–ring (VITON)
08	Washer	Copper
Nota: Combinazioni materiali non standard a richiesta Note: Non standard materials combinations on request		

✻: Filettatura GAS
✻: *BSPP threaded*

DN	H	H1	L	L1	Weight (Kg)	Pressure (Bar)
						adjustable from 0.5bar to 4bar
3/4"	55	65	75	24	0.6	
1"	65	75	90	27	1	