Valvole ad angolo retto PN6 con attuatore idraulico semplice effetto normalmente aperto (FO)

Angle valves NP6 with hydraulic single acting actuator fail open (FO)

Tab.123G-SR-FO

Conform to:
UNI EN1092

Esecuzione 01
con otturatore Com.

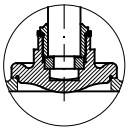

Execution 01
with SDSL disc

Esecuzione 02
con otturatore Aut.

Execution 02
with SDNR disc

con Proximity limit switch (a richiesta)
with Proximity limit switch (on request)

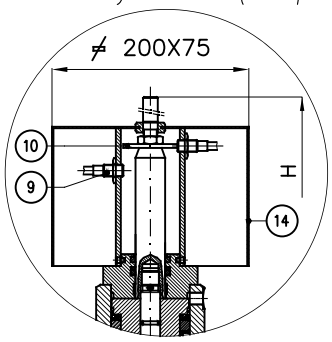

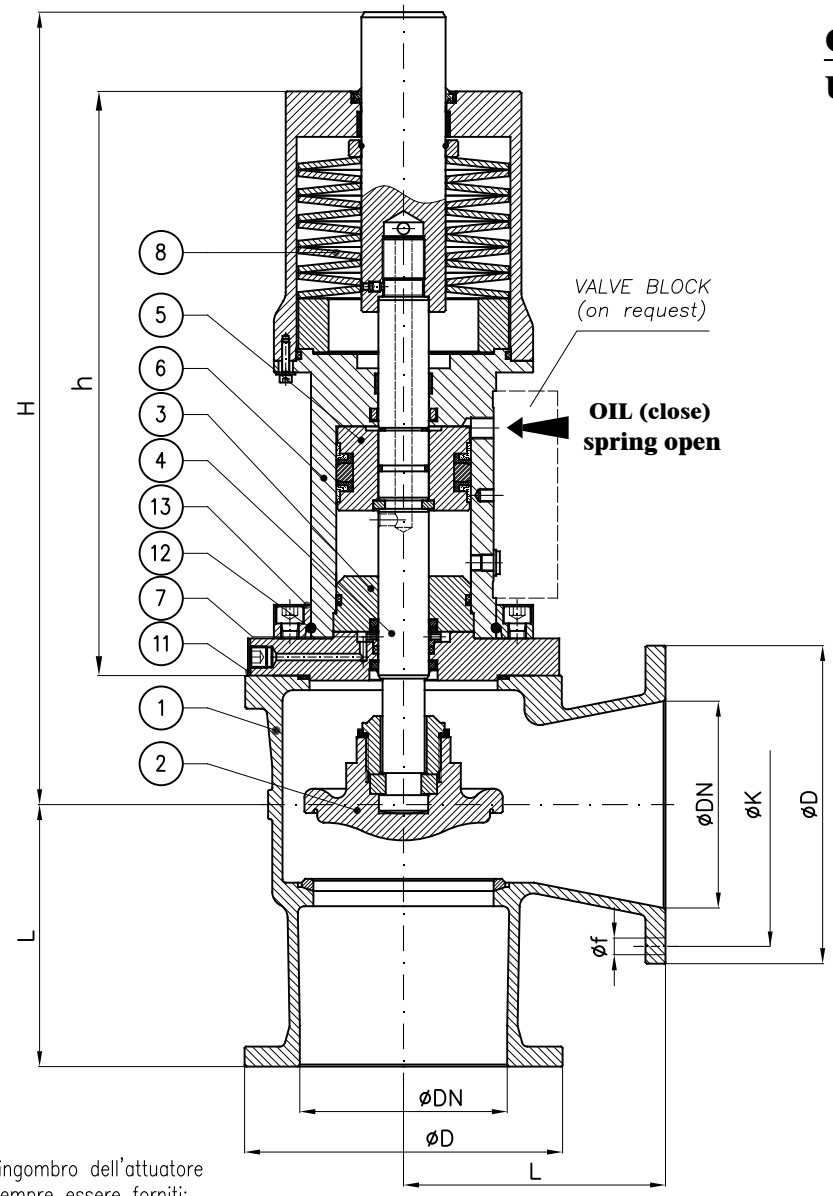

N.B.: Il dimensionamento e quindi anche l'ingombro dell'attuatore è funzione dei seguenti dati che devono sempre essere forniti:

- Pressione esercizio della valvola
- pressione olio all'attuatore
- Servizio

Note.: The size and so the overall dimension of the actuator depends by the following informations that should always be provided:

- *Valve's working pressure*
- *Oil pressure to actuator*
- *Service*

DN	h (~)	H (~)	L	øD	K	f	Holes NO. f	Weight (Kg)
32	305	385	105	120	90	14	4	
40	305	385	95	130	100	14	4	
50	295	385	100	140	110	14	4	
65	285	385	120	160	130	14	4	
80	335	435	130	190	150	18	4	
100	320	435	150	210	170	18	4	
125	420	550	175	240	200	18	8	
150	485	630	200	265	225	18	8	
200	485	675	250	320	280	18	8	
250	565	725	300	375	335	18	12	

Combinazione materiali standard – Standard materials Combination

		G/316	G/B
ITEM	DENOMINAZIONE DENOMINATION	MATERIALE MATERIAL	MATERIALE MATERIAL
01	Body	Cast iron UNI EN1561 EN-GJL-250	Cast iron UNI EN1561 EN-GJL-250
02	Disc (≤ DN80)	Stainless steel AISI316 UNI EN10088	Bronze UNI EN1982 G-CuSn5Zn5Pb5
02	Disc (≥ DN100)	Cast steel GP240-GH UNI EN10213 plus AISI316 facing welding	Bronze UNI EN1982 G-CuSn5Zn5Pb5
03	Inner head flange	Cast iron UNI EN1561 EN-GJL-250	Cast iron UNI EN1561 EN-GJL-250
04	Stem	Stainless steel AISI316 UNI EN10088	Stainless steel AISI316 UNI EN10088
05	Piston	Steel 9SMnPb28 UNI EN10087	Steel 9SMnPb28 UNI EN10087
06	Housing assembly	Fe52.2 GALVANIZED	Fe52.2 GALVANIZED
07	Back rod	Steel 9SMnPb28 UNI EN10087	Steel 9SMnPb28 UNI EN10087
08	Disk spring	Steel UNI EN10270	Steel UNI EN10270
09	Proximity switch	CEED BG12/2PF2 PNP CEOM E2FX2E2G NPN	CEED BG12/2PF2 PNP CEOM E2FX2E2G NPN
10	Indicator washer	Steel 9SMnPb28 UNI EN10087	Steel 9SMnPb28 UNI EN10087
11	Flange	Steel UNI C40	Steel UNI C40
12	Snap ring ø5	Stainless steel AISI316 UNI EN10088	Stainless steel AISI316 UNI EN10088
13	Collar	Fe52.2 GALVANIZED	Fe52.2 GALVANIZED
14	Shield	Stainless steel AISI316 UNI EN10088	Stainless steel AISI316 UNI EN10088

Nota: Combinazioni materiali non standard a richiesta
Note: Non standard materials combinations on request