Valvole a via diritta - serie pesante PN6
Globe valves straight type - heavy class NP6

Tab.122GS

Conform to:
UNI EN1092
DIN 3202

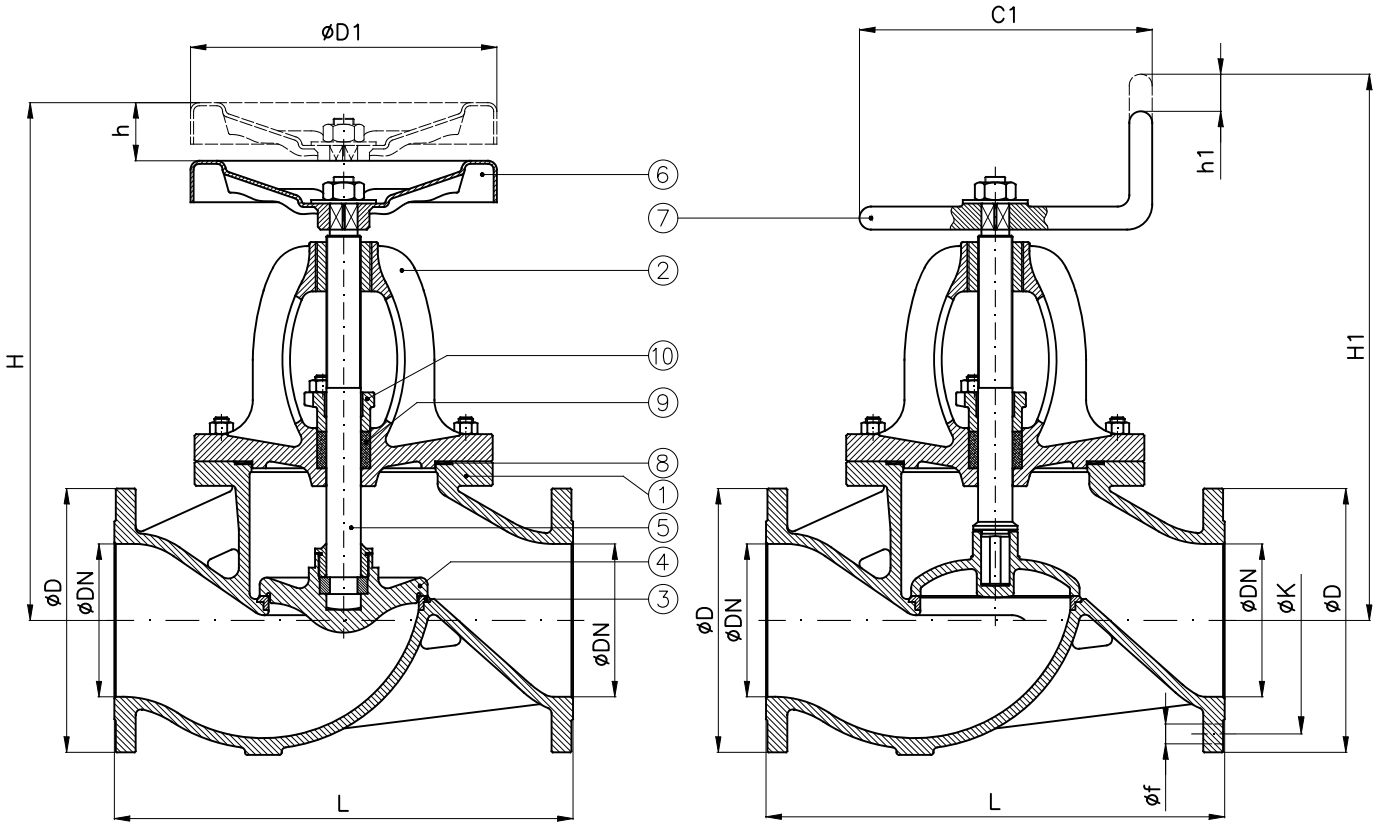

Tab.122.1GS PN6	
comandata (SDSL) with fixed disc (SDSL)	UNI 3411 UNAV 8407 NE 401130

Tab.122.2GS PN6	
semiautomatica (SDNR) with loose disc (SDNR)	UNI 3415 UNAV 8420 NE 403130

DN	C1	D1	H SDSL (~)	h SDSL	H1 SDNR (~)	h1 SDNR	L	D	K	f	Holes NO. f	Weight (Kg)
40	125	125	260	20	285	12	200	130	100	14	4	10
50	125	125	275	24	300	14	230	140	110	14	4	13
65	175	175	335	32	360	18	290	160	130	14	4	21
80	175	175	345	35	370	20	310	190	150	18	4	27
100	200	200	405	45	415	28	350	210	170	18	4	40
125	225	225	450	54	455	32	400	240	200	18	8	52
150	225	300	490	62	505	38	480	265	225	18	8	70
175	250	400	540	74	560	45	550	295	255	18	8	92
200	250	400	600	82	610	50	600	320	280	18	8	118
250	300	500	720	100	710	66	730	375	335	18	12	168
300	425	575	820	118	820	85	850	440	395	22	12	250
350	500		920	135	970	90	980	490	445	22	12	370
400	575		1100	135	1150	100	1100	540	495	22	16	554
450	650		1200	160	1250	115	1300	595	550	22	16	
500			1350	180	1400	130	1500	645	600	22	20	
600			1550	215	1600	160	1800	755	705	26	20	

Combinazione materiali standard – Standard materials Combination			
		GS/316	GS/B
ITEM	DENOMINAZIONE DENOMINATION	MATERIALE MATERIAL	MATERIALE MATERIAL
01	Body	Nodular cast iron EN-GJS-400-15U UNI EN1563	Nodular cast iron EN-GJS-400-15U UNI EN1563
02	Bonnet	Nodular cast iron EN-GJS-400-15U UNI EN1563	Nodular cast iron EN-GJS-400-15U UNI EN1563
03	Body seat	Stainless steel AISI316 UNI EN10088	Stainless steel AISI316 UNI EN10088
04	Disc (≤ DN80)	Stainless steel AISI316 UNI EN10088	Bronze UNI EN1982 G-CuSn5Zn5Pb5
04	Disc (≥ DN100)	Cast steel GP240-GH UNI EN10213 plus AISI316 facing welding	Bronze UNI EN1982 G-CuSn5Zn5Pb5
05	Stem	Stainless steel AISI316 UNI EN10088	Brass CW617N (OT58)
06	Handwheel	Sheet of carbon steel	Sheet of carbon steel
07	Handle	Steel A37 UNI EN10217-1	Steel A37 UNI EN10217-1
08	Gasket	Planiflex KG carbo/C PF81	Planiflex KG carbo/C PF81
09	Packing	Carbograph GR8800	Carbograph GR8800
10	Gland bushing	Bronze UNI EN1982 G-CuSn5Zn5Pb5	Bronze UNI EN1982 G-CuSn5Zn5Pb5
Nota: Combinazioni materiali non standard a richiesta Note: Non standard materials combinations on request			